MOISES CARRERA

PCB Design · Rapid Prototyping · Product Development

Mechatronics Engineer · Altium experience

Mabe TyP · Notre Dame ESTEEM '26

Altium Designer | **PCB Layout** | **DFM** | **SolidWorks**

mcarrera7@icloud.com · linkedin.com/in/moisescarrera

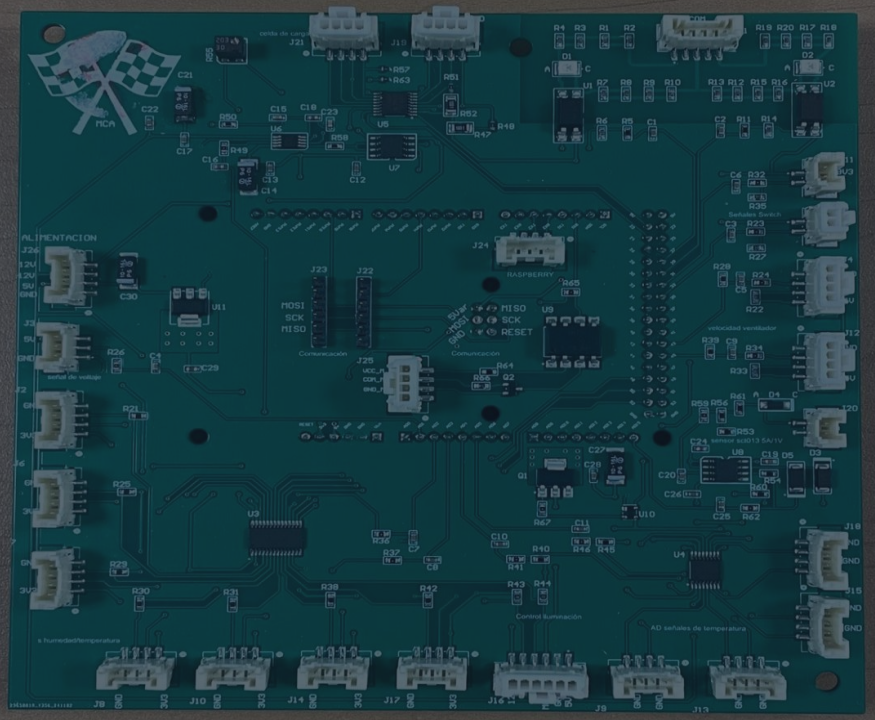

Engineering Portfolio

About Me

Background

- Mechatronics Engineer, Universidad Anáhuac Querétaro (GPA 3.72 / 4.0)
- MS – Engineering, Science, Technology & Entrepreneurship, Notre Dame ‘26 (GPA 3.62/4.0)
- Altium Education PCB Design Certificate (2026)
- CSWA Certified SolidWorks Associate (2025)
- Native Spanish · Advanced English · Basic Italian

Contact

mcarrera7@icloud.com

linkedin.com/in/moisescarrera

South Bend, Indiana

PCB Design

- Altium Designer, schematic & layout
- 2-layer boards
- Mixed SMD / through-hole
- Outputs generation
- DFM review cycles

Hardware & Systems

- Board testing & debugging
- Signal integrity validation
- Sensor calibration & testing
- Harness design & assembly
- Cross-functional reporting

Tools & Software

SolidWorks | Python | Bambu Lab

Project: Productos Conectados - Mabe TyP

IoT Refrigeration Platform · 2024–2025

As part of Mabe's New Technology & Innovation (NTI) division, I co-led the "Productos Conectados" initiative an end-to-end connected refrigerator platform. Working alongside a senior hardware engineer, I took full ownership of the PCB design lifecycle: from schematic capture and component selection to DFM reviews, fabrication coordination, and functional validation across 20+ sensors.

2
PCBs Designed
Full design lifecycle

20+
Sensors Integrated
Temp, humidity, current, speed…

6
DFM Cycles
With AJ Electronic Design and hardware engineers

Role & Responsibilities

- Interpreted hardware reference designs from senior engineers
- Owned component footprint selection and placement strategy
- Executed layout routing with trace width, clearance, and thermal relief rules
- Coordinated with external fabricator AJ Electronic Design and hardware team (6 DFM rounds)
- Resolved footprint mismatches, clearance violations, and DC-DC converter pad issues
- Performed full board bring-up: signal integrity and sensor reads

Key Deliverables

- 2 production-ready Gerber files submitted to fabricator
- Full BOM: 43 unique MPNs, 292 SMT placements (Main Board)
- Technical validation report delivered to cross-functional teams
- Magnetic harness design for Liner board shelve-tracking subsystem
- 10-unit production run completed.
- Sensor accuracy validated: temp, humidity, voltage, current, fan speed

PCB 1 Main Controller Board

150 × 150 mm · 2-Layer · 43 MPNs · 292 SMT Components

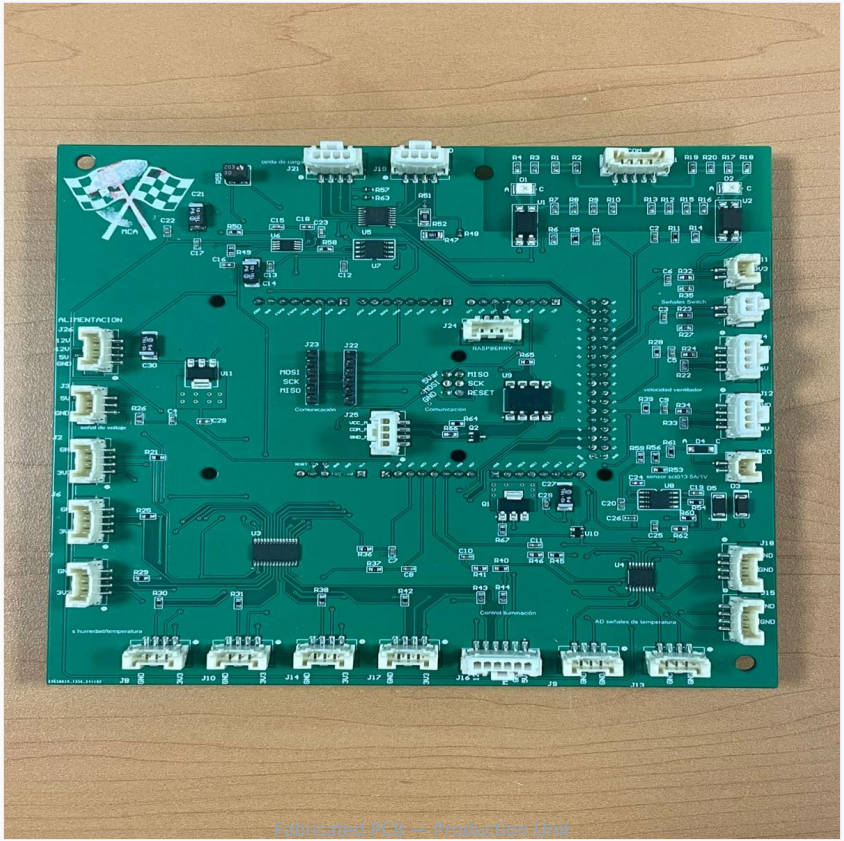

Fabricated PCB — Production Unit

Board Specifications

Layers	2-Layer (Top + Bottom)
Board Size	150.07 × 149.93 mm
Unique MPNs	43 components
SMT Placements	292 (SMD + mixed THT)
Supply Voltages	12V(DC) , 5V(DC), 3.3V(DC), 127 V (AC)
MCU Interface	Raspberry Pi + SPI / UART comms
Fabricator	AJ Electronic Design, Zapopan, Jalisco
DFM Rounds	6 iterative review cycles

Sensor Coverage · Humidity · Temperature · Voltage · Current · Fan Speed

Altium Designer Layout & Routing

Schematic · PCB Layout · 3D Render · Custom Footprints

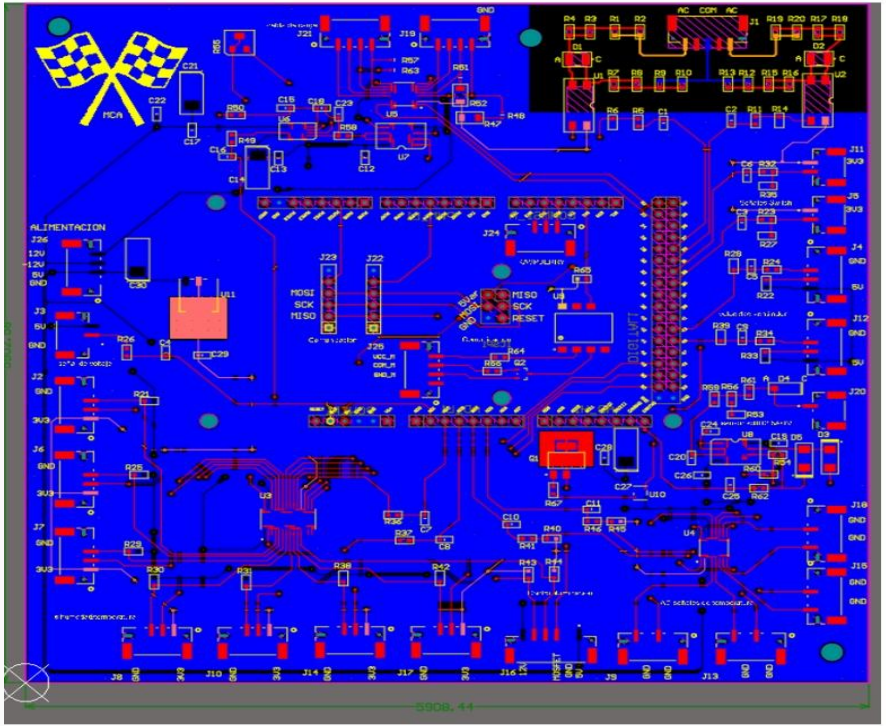

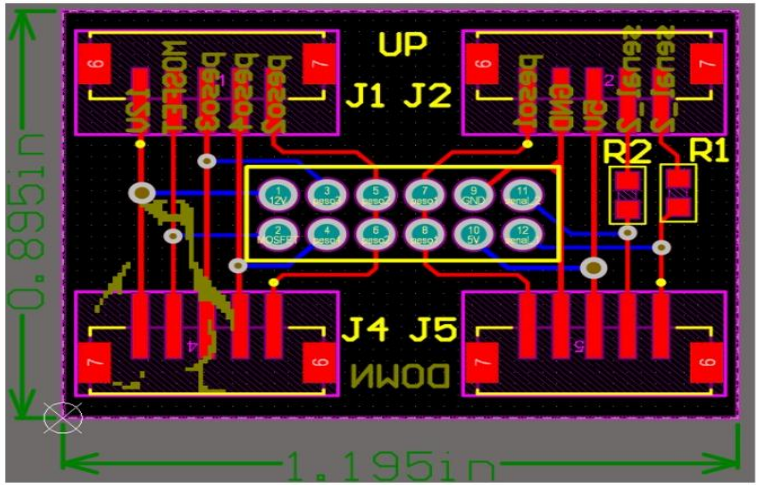

PCB Layout View
Full routing, component placement, power planes

Custom Connector Footprint
Magnetic liner harness, dimensioned to spec

3D PCB Render
Altium 3D validation before Gerber release

PCB 2 Liner Board

Magnetic Harness · LED Control · Rack Position Sensing

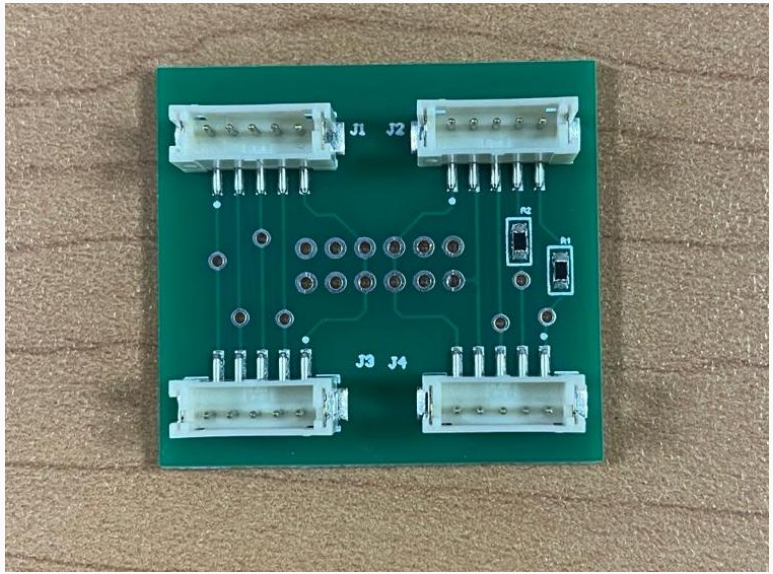

Width

30.35 mm (1.195 in)

Height

22.73 mm (0.895 in)

Interface

Magnetic harness (ZR series)

Connectors

JST ZHR-5 / B5B-ZR

Design Purpose

The Liner Board is a compact sub-PCB mounted inside the refrigerator liner. It interfaces with the Main Controller via a custom magnetic harness and is responsible for shelve placement detection and internal lighting control.

Technical Highlights

- JST B5B-ZR & ZHR-5 magnetic pogo pin harness connectors
- 0603 SMD resistors
- Rack detection via positional signal encoding (J1–J5)
- Integrated LED lighting control circuit
- Designed and validated

3D Design, Prototyping & Mechanical Engineering

SolidWorks · Bambu Lab · BAJA SAE · Irish Nostalgia

Irish Nostalgia Product Development

Product Growth & E-Commerce Lead · 2025 - Present

- End-to-end product dev: design → manufacture → quality → delivery
- 3D printed licensed Notre Dame memorabilia on Bambu Lab H2C / H2S / X1C
- Designed ornaments, golf tees, and keepsakes in SolidWorks and CorelDraw.
- Managed 7+ B2B institutional accounts
- Print farm operations at scale with multi-material assemblies
- Oversaw dimensional quality, finish standards, and packaging
- Rapid prototyping for student project teams and e-commerce fulfillment

SolidWorks | Bambu Lab | 3D Printing | B2B

BAJA SAE 2022 Suspension Engineer

Anahuac Racing Team · Universidad Anáhuac Querétaro · 2021 - 2023

- Designed a double wishbone suspension for a competing off-road vehicle
- Full geometry modeled in SolidWorks.
- Ran FEA static and dynamic load analysis to validate safety margins
- Manufactured components in-house: CNC, welding, and manual machining.
- On-site mechanical support and rapid repair during BAJA SAE competition
- PLC programming experience (Keyence ladder logic) from coursework

SolidWorks | CNC Machining | BAJA SAE | G-Code

Let's Build Something Together.

mcarrera7@icloud.com
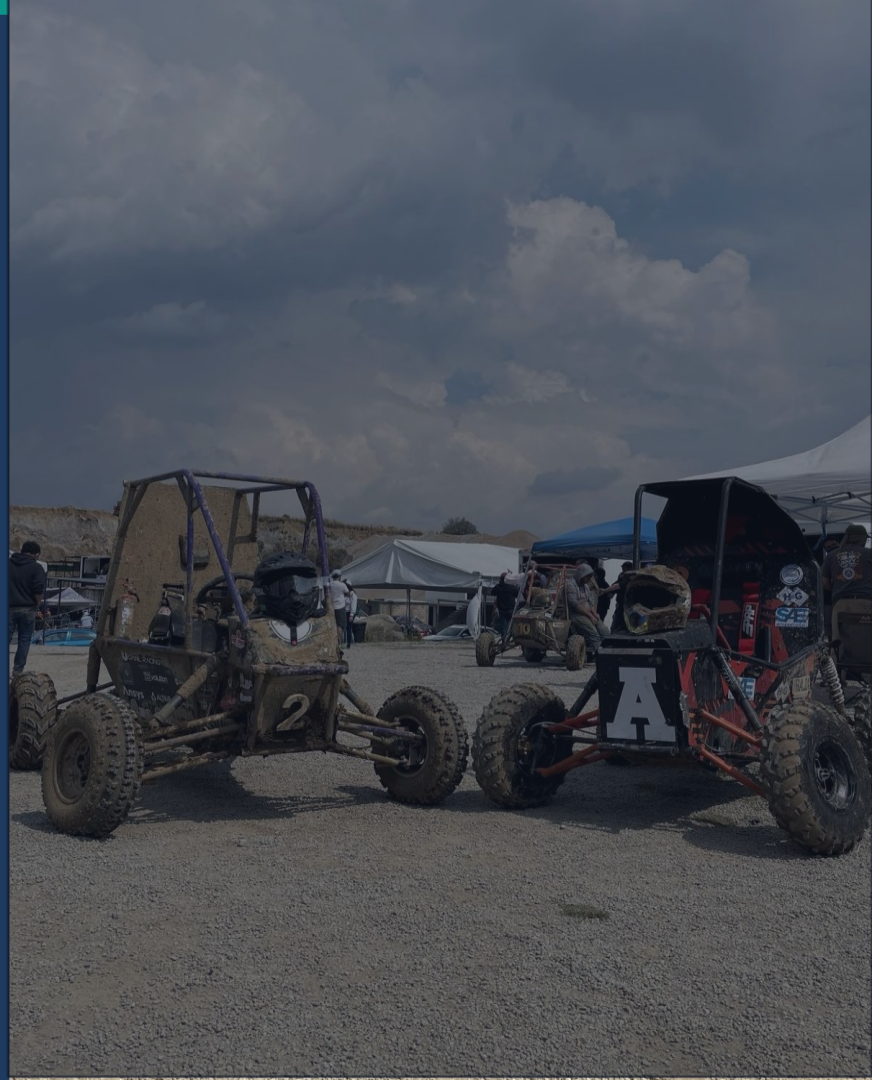
linkedin.com/in/moisescarrera · South Bend, IN