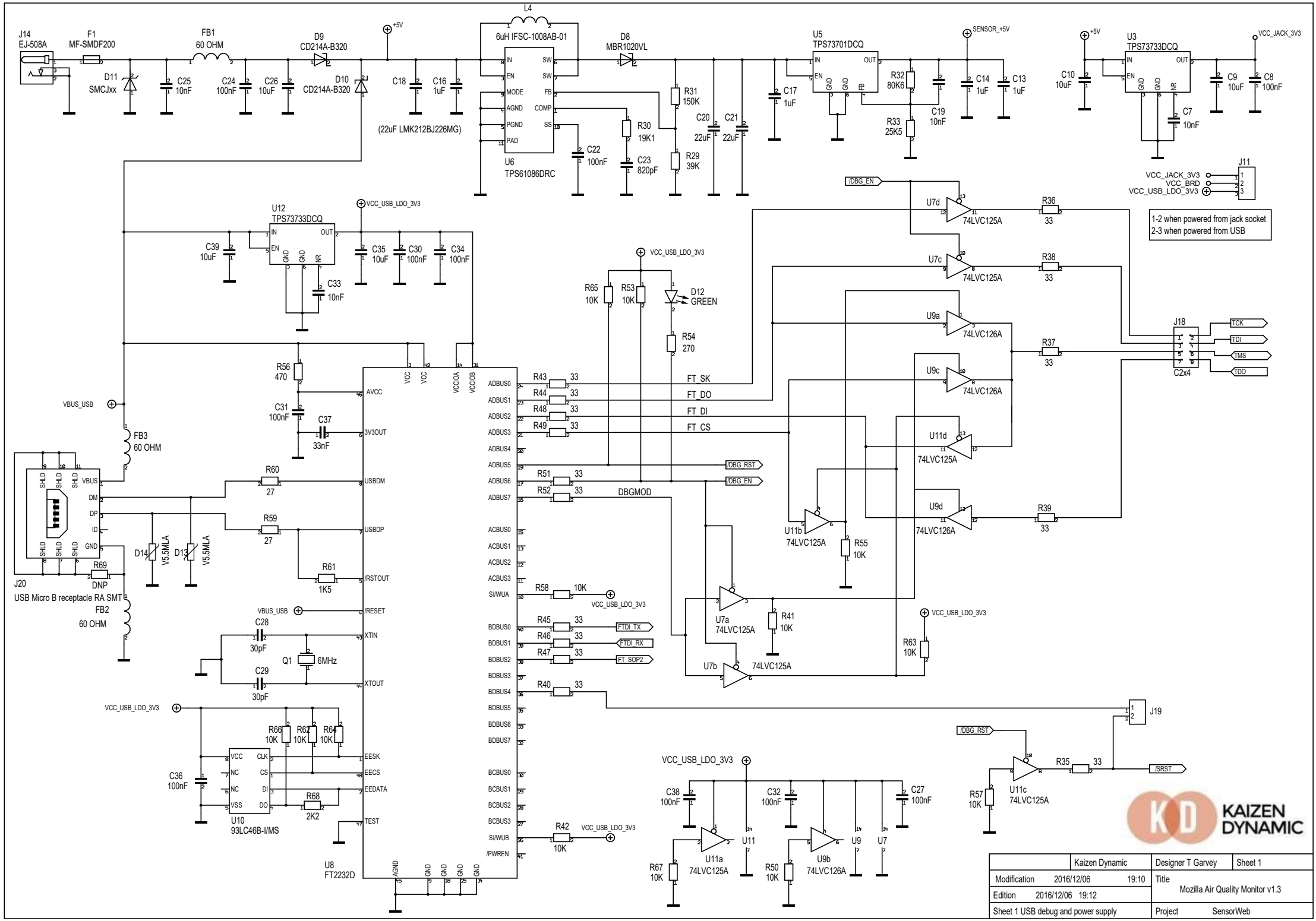
J14
EJ-508A
F1
MF-SMDF200
FB1
60 OHM
D11
SMCJxx
C25
10nF
C24
100nF
C26
10uF
D9
CD214A-B320
D10
CD214A-B320
+5V
C18
(22uF LMK212BJ226MG)
C16
1uF
L4
6uH IFSC-1008AB-01
U6
TPS61086DRC
D8
MBR1020VL
R31
150K
R30
19K1
R29
39K
C22
100nF
C23
820pF
C20
22uF
C21
22uF
C17
1uF
U5
TPS73701DCQ
SENSOR_+5V
R32
80K6
R33
25K5
C19
10nF
C14
1uF
C13
1uF
C10
10uF
U3
TPS73733DCQ
VCC_JACK_3V3
C7
10nF
C9
10uF
C8
100nF
J11
VCC_JACK_3V3
VCC_BRD
VCC_USB_LDO_3V3
1-2 when powered from jack socket
2-3 when powered from USB
U12
TPS73733DCQ
VCC_USB_LDO_3V3
C39
10uF
C35
10uF
C30
100nF
C34
100nF
C33
10nF
/DBG_EN
U7d
74LVC125A
R36
33
U7c
74LVC125A
R38
33
R65
10K
R53
10K
D12
GREEN
R54
270
U9a
74LVC126A
R37
33
J18
C2x4
TCK
TDI
TMS
TDO
U9c
74LVC126A
U11d
74LVC125A
U9d
74LVC126A
R39
33
R56
470
C31
100nF
C37
33nF
VBUS_USB
FB3
60 OHM
R60
27
R59
27
D14
V5.5MLA
D13
V5.5MLA
R61
1K5
R69
DNP
J20
USB Micro B receptacle RA SMT
FB2
60 OHM
R43
R44
R48
R49
FT_SK
FT_DO
FT_DI
FT_CS
/DBG_RST
/DBG_EN
R51
R52
DBGMOD
U11b
74LVC125A
R55
10K
R58
10K
U7a
74LVC125A
R41
10K
R63
10K
R45
R46
R47
FTDI_TX
FTDI_RX
FT_SOP2
U7b
74LVC125A
R40
C28
30pF
Q1
6MHz
C29
30pF
R66
10K
R62
10K
R64
10K
C36
100nF
U10
93LC46B-I/MS
R68
2K2
U8
FT2232D
R42
10K
J19
/DBG_RST
R35
33
/SRST
U11c
74LVC125A
R57
10K
C38
100nF
C32
100nF
C27
100nF
U11a
74LVC125A
U9b
74LVC126A
R67
10K
R50
10K
U11
U9
U7
KAIZEN DYNAMIC
Kaizen Dynamic
Designer T Garvey
Sheet 1
Modification 2016/12/06 19:10
Title
Mozilla Air Quality Monitor v1.3
Edition 2016/12/06 19:12
Sheet 1 USB debug and power supply
Project SensorWeb