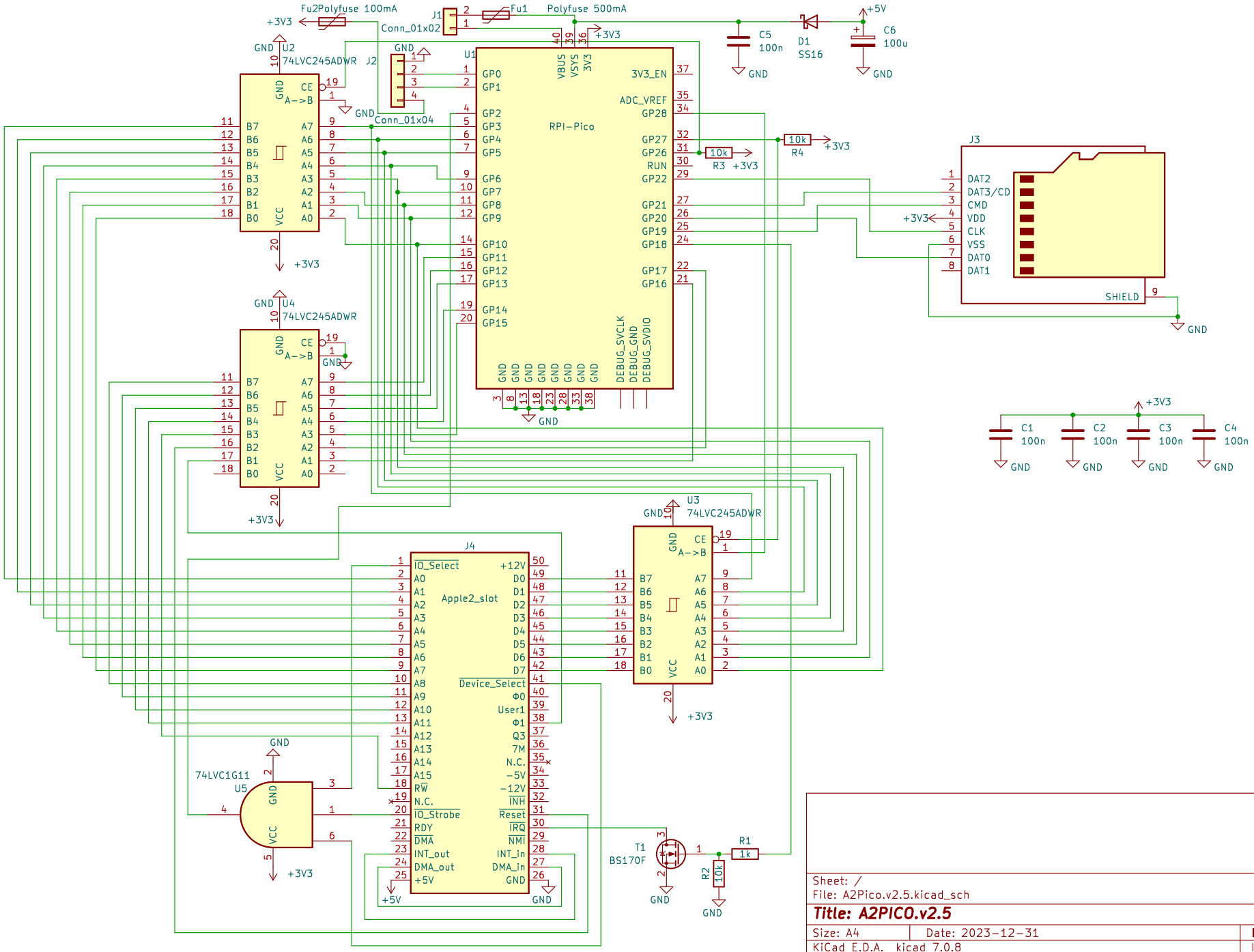

Sheet: /
File: A2Pico.v2.5.kicad_sch

Title: A2PICO.v2.5

Size: A4	Date: 2023-12-31	**Rev: 2.5**
KiCad E.D.A. kicad 7.0.8		Id: 1/1