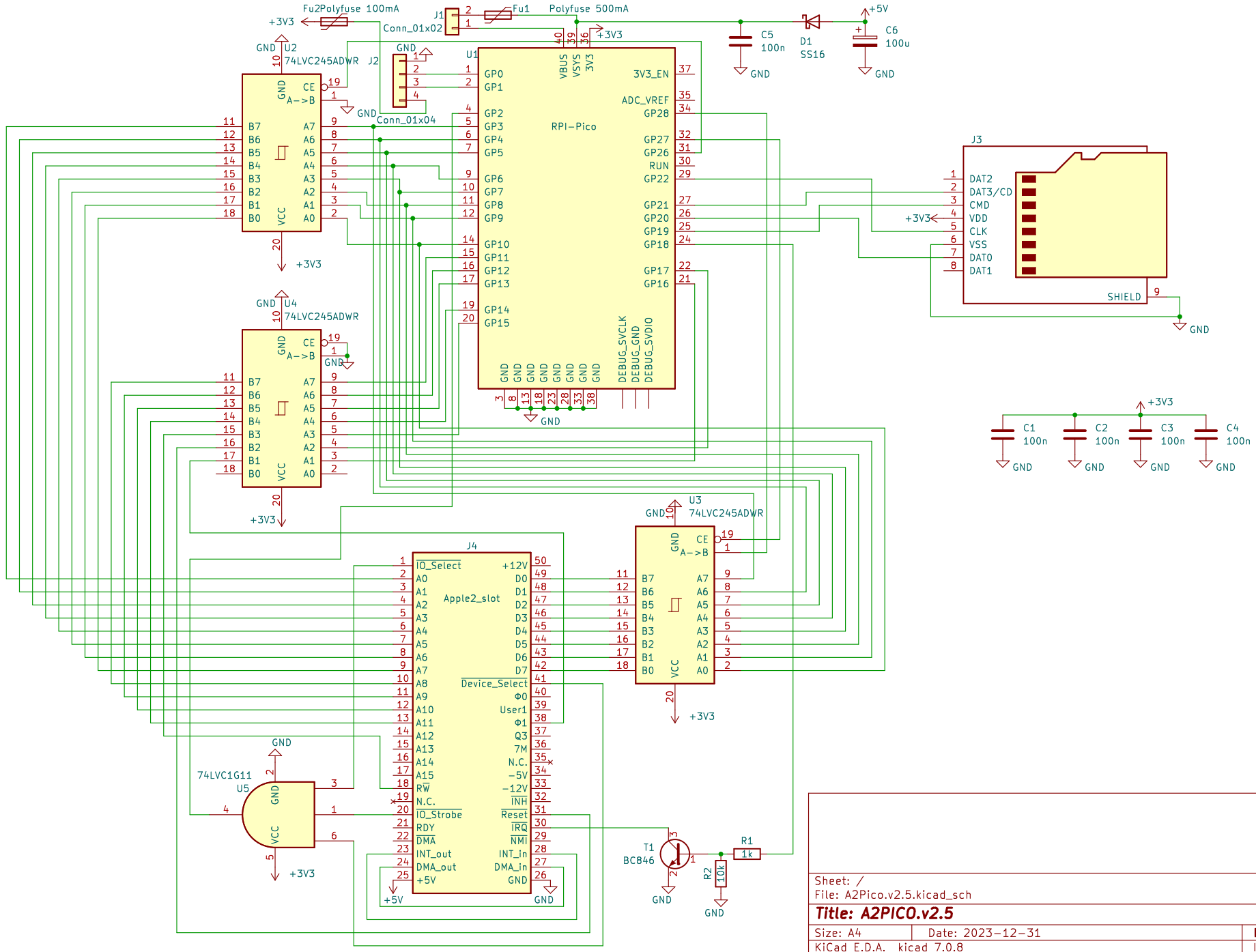
Fu2 Polyfuse 100mA
Fu1 Polyfuse 500mA
J1 Conn_01x02
J2 Conn_01x04
U1 RPI-Pico
U2 74LVC245ADWR
U3 74LVC245ADWR
U4 74LVC245ADWR
U5 74LVC1G11
J3
J4 Apple2_slot
C5 100n
C6 100u
D1 SS16
C1 100n
C2 100n
C3 100n
C4 100n
T1 BC846
R1 1k
R2 10k
+3V3
+5V
GND
Sheet: /
File: A2Pico.v2.5.kicad_sch
Title: A2PICO.v2.5
Size: A4
Date: 2023-12-31
Rev: 2.5
KiCad E.D.A. kicad 7.0.8
Id: 1/1