ROLLER SHADES INSTALLATION GUIDE

NO FEAR, WE'RE HERE

World Wide Shades is here to help you every step of the way. Please follow our step by step guide to install your window treatments with ease.

WORLD WIDE SHADES

Custom Window Treatments

Installation Instructions

Note: It is best to read through the installation instruction completely prior to beginning your installation.

ROLLER SHADES PARTS

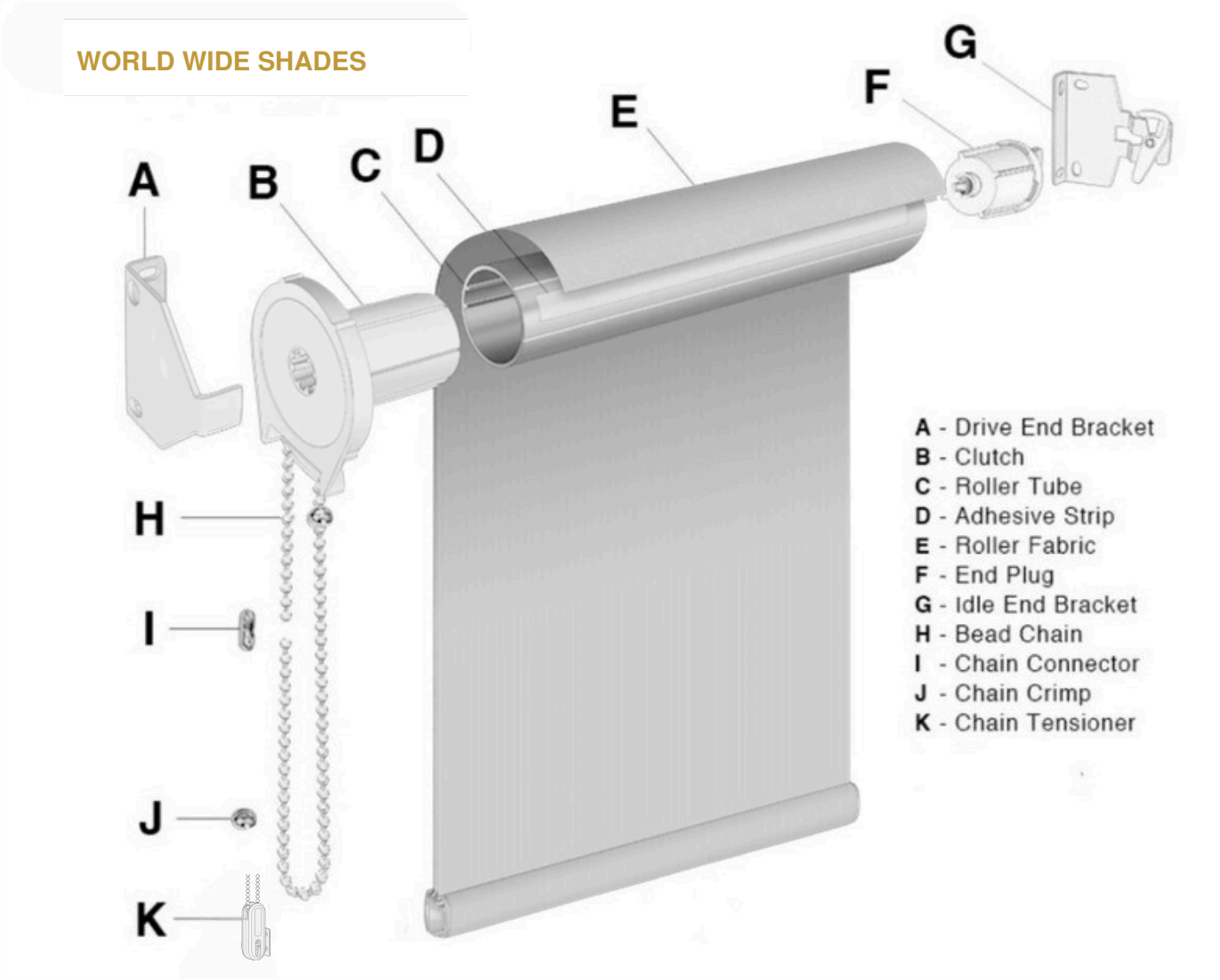

TOOLS THAT YOU WILL NEED

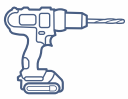
Cordless Drill

Tape Measure

Pencil

Step stool or ladder

Installation Steps

1. INSTALL THE BRACKETS

Hold the drive end bracket (A) where you would like the shade and mark holes using the pencil. Install the bracket using a screw. Slide the shade into the bracket and use the pencil to mark where you will need to mount the opposite bracket (G). Make sure that they are properly aligned so the shades will raise and lower evenly. Install the idle end bracket (G) the screws and the drills.

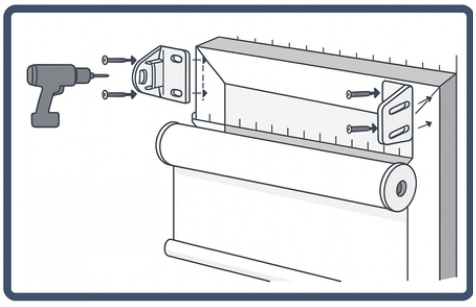

2. INSERT SHADE INTO THE BRACKET

After both brackets have been installed, insert your shades into the brackets. Start by placing the pin side of the roller shade (B) into the hole of the drive end bracket (A). Then insert the other side of the roller shade (F) into the idle end bracket (G).

3. TEST THE OPERATION

Once the roller shade (E) is secured into place, test the operation of the shade or blinds with the brackets, making sure they are level.

4. INSTALL THE CHAIN TENSIONER

Lastly, install the chain tensioner (K) to the inside of your window frame. Loop the beaded chain (H) through the opening of the tensioner to ensure that the chain is fastened.

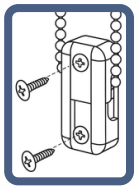

ENJOY YOUR NEW WINDOW TREATMENTS

Still need help? Contact us at the number below and we can guide you through the process.

Roller Shades Care

Vinyl and PVC Roller Shades

For a light dusting, use a feather duster or the brush attachment on a vacuum. Use mild soap and water on a damp cloth to wipe them down. Rinse thoroughly after cleaning and let them air dry.

Need something stronger than soap and water?
Before using other cleaners, test them in a small area to make sure they won't damage or leave spots or marks on your shades. Avoid strong cleaners and disinfectants, especially those containing quaternary ammonium compounds and phenols.

Fabric Roller Shades

Fabric roller shades should only be dusted, do not clean them with water.

CAUTION

Dangling window cords are dangerous to children and pets and are considered a strangulation hazard. If you have small children, you should ideally only use cordless window treatments. The Window Covering Safety Council recommends ONLY cordless window treatments in homes with small children. If your home has old window treatments, consider replacing them with safer options. Be absolutely certain that all window treatments are installed correctly, even cordless options. Children and pets may be able to reach lower areas of a window treatment and improperly installed or fastened blinds or shades could fall and seriously injure an adult or child.