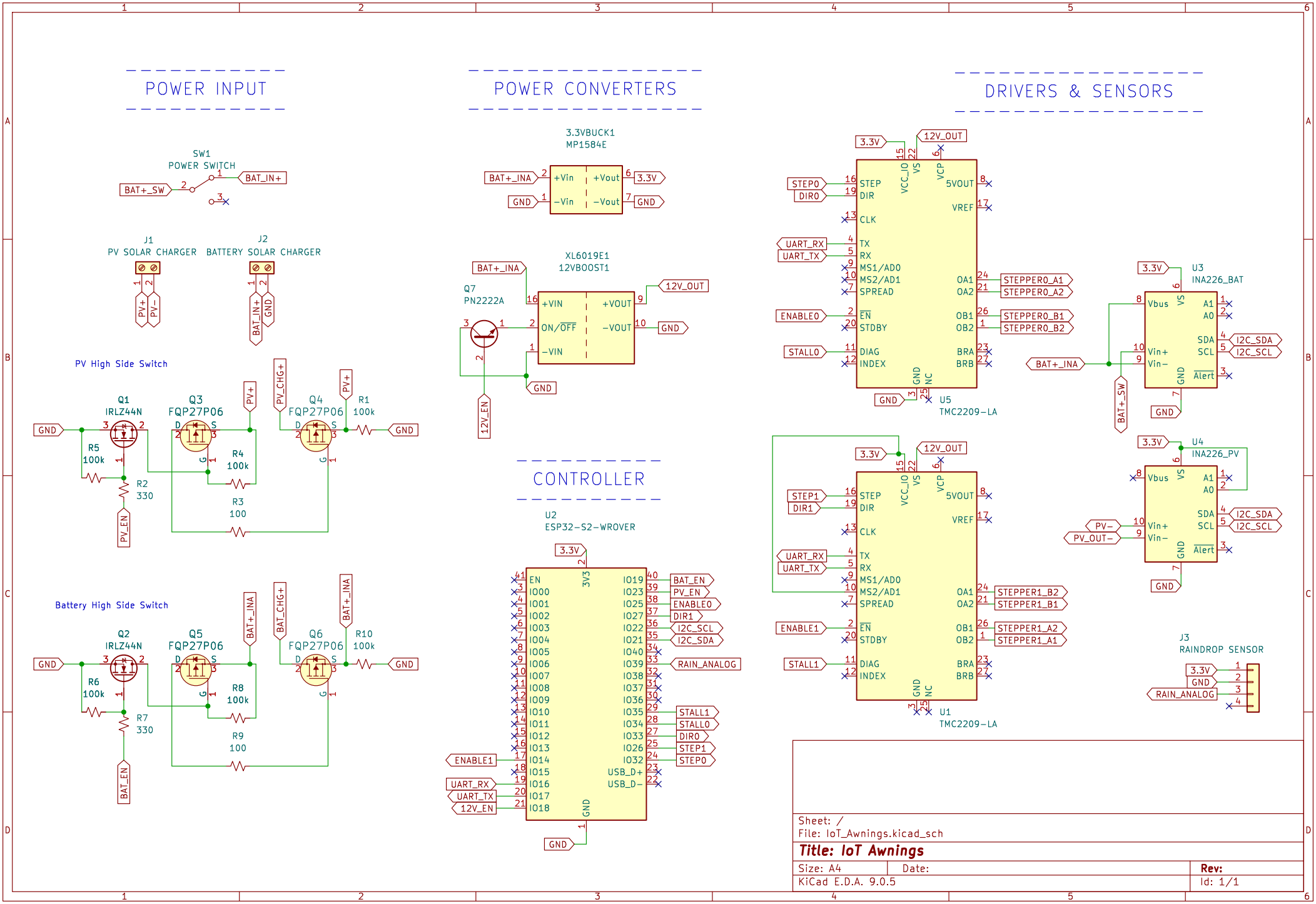
POWER INPUT
SW1
POWER SWITCH
BAT+_SW
BAT_IN+
J1
PV SOLAR CHARGER
J2
BATTERY SOLAR CHARGER
PV+
PV−
BAT_IN+
GND
PV High Side Switch
Q1
IRLZ44N
Q3
FQP27P06
Q4
FQP27P06
R1
100k
R5
100k
R2
330
R4
100k
R3
100
PV_EN
PV_CHG+
Battery High Side Switch
Q2
IRLZ44N
Q5
FQP27P06
Q6
FQP27P06
R10
100k
R6
100k
R7
330
R8
100k
R9
100
BAT_EN
BAT+_INA
BAT_CHG+
POWER CONVERTERS
3.3VBUCK1
MP1584E
+Vin
−Vin
+Vout
−Vout
3.3V
XL6019E1
12VBOOST1
Q7
PN2222A
+VIN
ON/OFF
−VIN
+VOUT
−VOUT
12V_OUT
12V_EN
CONTROLLER
U2
ESP32−S2−WROVER
3V3
EN
IO00
IO01
IO02
IO03
IO04
IO05
IO06
IO07
IO08
IO09
IO10
IO11
IO12
IO13
IO14
IO15
IO16
IO17
IO18
IO19
IO23
IO25
IO27
IO22
IO21
IO40
IO39
IO38
IO37
IO36
IO35
IO34
IO33
IO26
IO32
USB_D+
USB_D−
GND
ENABLE1
UART_RX
UART_TX
12V_EN
BAT_EN
PV_EN
ENABLE0
DIR1
I2C_SCL
I2C_SDA
RAIN_ANALOG
STALL1
STALL0
DIR0
STEP1
STEP0
DRIVERS & SENSORS
U5
TMC2209−LA
STEP
DIR
CLK
TX
RX
MS1/AD0
MS2/AD1
SPREAD
EN
STDBY
DIAG
INDEX
VCC_IO
VS
VCP
5VOUT
VREF
OA1
OA2
OB1
OB2
BRA
BRB
STEPPER0_A1
STEPPER0_A2
STEPPER0_B1
STEPPER0_B2
U1
TMC2209−LA
STEPPER1_B2
STEPPER1_B1
STEPPER1_A2
STEPPER1_A1
U3
INA226_BAT
U4
INA226_PV
Vbus
Vin+
Vin−
A1
A0
SDA
SCL
Alert
PV−
PV_OUT−
J3
RAINDROP SENSOR
Sheet: /
File: IoT_Awnings.kicad_sch
Title: IoT Awnings
Size: A4
Date:
Rev:
KiCad E.D.A. 9.0.5
Id: 1/1