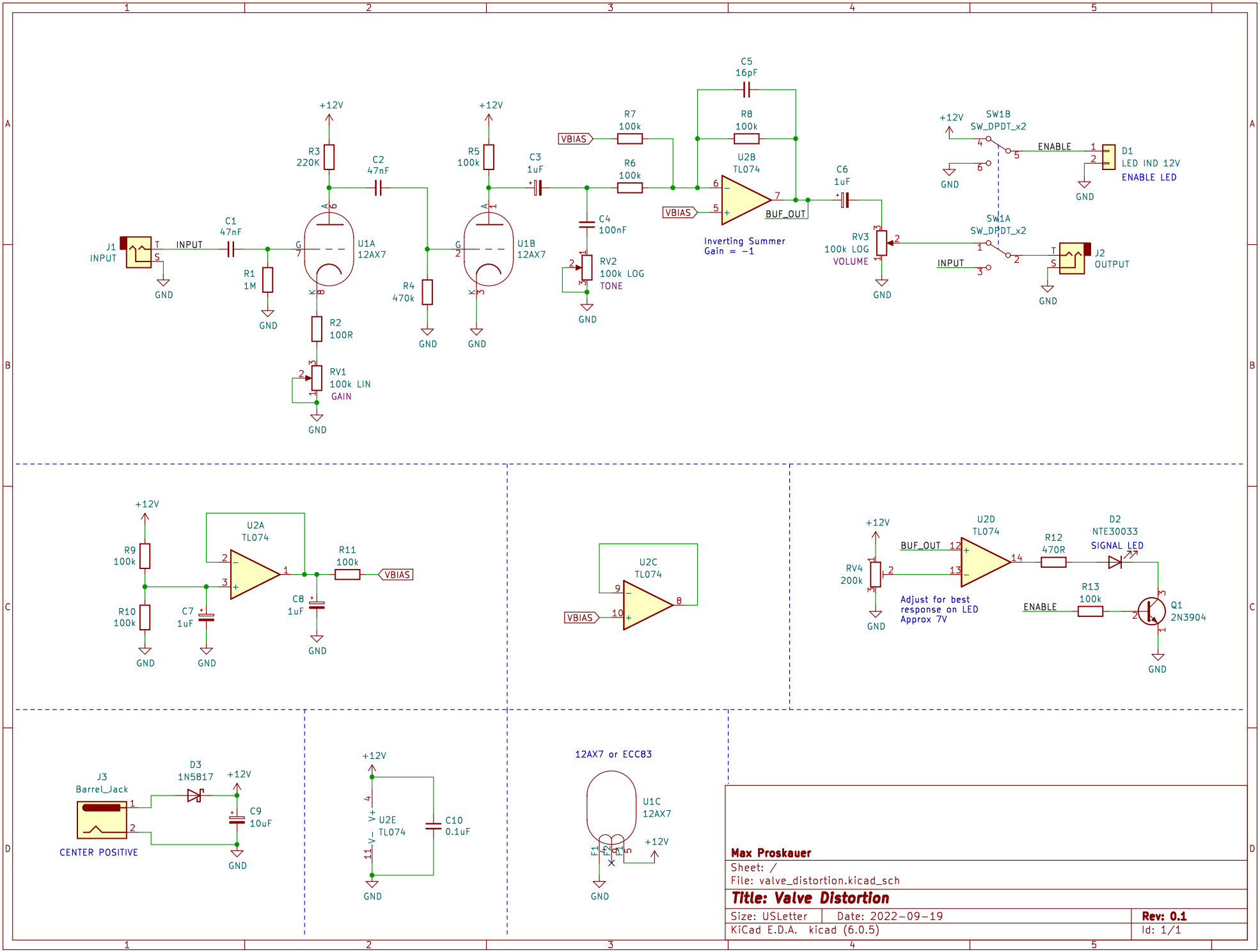

Max Proskauer

Sheet: /

File: valve_distortion.kicad_sch

Title: Valve Distortion

Size: USLetter	Date: 2022-09-19	**Rev: 0.1**
KiCad E.D.A. kicad (6.0.5)		Id: 1/1