ANTI-SLEEPING DRIVING SYSTEM USING ESP32

A PROJECT REPORT

SUBMITTED BY

M.P.SREEKAANTH (CHAWSEL008)

IN PARTIAL FULFILLMENT OF THE DEGREE IN

BACHELOR OF SCIENCE IN ELECTRONICS

UNIVERSITY OF CALICUT

GOVERNMENT COLLEGE CHITTUR PALAKKAD
KERALA-678104

DEPARTMENT OF ELECTRONICS GOVERNMENT COLLEGE CHITTUR

PALAKKAD KERALA - 678104

CERTIFICATE

This is to certify that M.P.SREEKAANTH(CHAWSEL008)has completed the project work on "ANTI-SLEEPING DRIVING SYSTEM USING ESP32" and is being submitted in the partial fulfillment for bachelor of science in **ELECTRONICS** under **UNIVERSITY OF CALICUT** during 2022- 2025.

PROJECT CO ORDINATOR HEAD OF THE DEPARTMENT

EXTERNAL EXAMINER

1)

2)

DECLARATION

This is to declare that the project work entitled “Anti-sleeping driving system using ESP32” submitted to the University of Calicut for the partial fulfillment of the requirements for the sixth semester examination of Bachelor of Science in Electronics is a bonafide record of the original project work done at Govt. College Chittur under the supervision of Dr. ANISH KUMAR M.S, Assistant professor, Department of Electronics, Govt. College Chittur, Palakkad.

M.P.SREEKAANTH(CHAWSEL008)

ACKNOWLEDGMENT

We remember with gratitude……

Our supervising guide Dr. ANISH KUMAR M.S, Assistant professor, Department of Electronics, Govt. College Chittur, for his wholehearted support, advice, and timely care extended to me for the successful completion of the project.

We are thankful to Dr. Nishamol M.S, Dr. Sreejith M Nair, Dr. Sindhu Department of Electronics, Govt. College Chittur, for the constant encouragement, helps, and support to make this project successful.

We express our sincere thanks to all our teachers and friends who supported us directly and indirectly for the successful completion of the project.

M.P.SREEKAANTH (CHAWSEL008)

Abstract

This project presents a real-time driver drowsiness detection system utilizing the ESP32 microcontroller. The system continuously monitors the driver's eye-blinking pattern using an IR-based eye blink sensor and detects head nodding movements using an MPU6050 accelerometer. When drowsiness is detected, the system activates safety mechanisms, including reducing vehicle speed using PWM control through an L298 motor driver and notifying a remote monitoring system via the Blynk IoT platform. The integration of a GPS module allows real-time location sharing. A 16x2 LCD with I2C interface is used to display system status. The entire system is powered by a 12V supply regulated to 5V using an LM2596 buck converter.

Index

- Introduction
- Hardware and it's specifications
- Software and it's specifications
- Block diagram
- Circuit diagram
- Working
- Program
- Advantages and disadvantages
- Conclusion

INTRODUCTION

Drowsy driving is a major cause of road accidents, leading to severe injuries and fatalities. The Anti-Sleeping Driving System is designed to detect signs of driver fatigue and prevent accidents by issuing timely alerts. This system utilizes technologies such as eye-tracking, facial recognition, head movement detection, and heart rate monitoring to analyze the driver's alertness.

When signs of drowsiness—such as frequent blinking, head nodding, or prolonged eye closure—are detected, the system triggers alarms like sound alerts, seat vibrations, or visual warnings to wake the driver. Some advanced systems can even engage automatic braking or alert emergency contacts if the driver fails to respond.

Hardware and it's specifications

- **Microcontroller:** ESP32
- **Eye Blink Sensor:** IR-based sensor for continuous eye closure detection
- **Accelerometer Sensor:** MPU6050 (3-axis gyroscope and accelerometer) for head movement detection
- **Motor Driver:** L298N for controlling DC motor speed
- **DC Motor:** Used to simulate vehicle speed control
- **GPS Module:** For location tracking and transmission
- **LCD Display:** 16x2 with I2C interface for data display
- **IoT Platform:** Blynk app for remote monitoring and alerts
- **Power Supply:** 12V power source regulated to 5V using LM2596 buck converter

ESP32

The ESP32 is a low-cost, low-power system on a chip (SoC) developed by Espressif Systems. It is widely used in IoT (Internet of Things) applications due to its powerful processing capabilities, integrated Wi-Fi and Bluetooth, and energy efficiency.

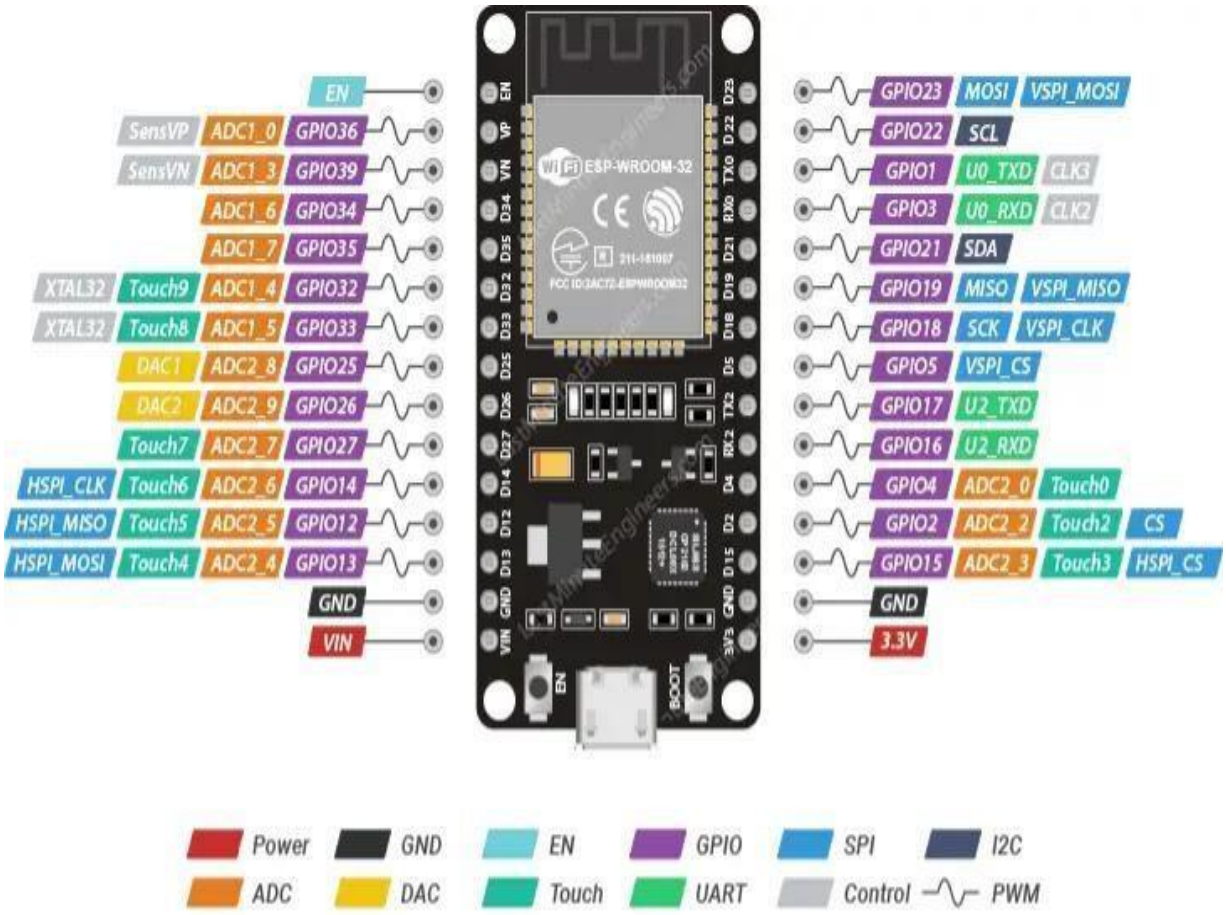

ESP32 Specifications

1. Processor & Performance

- Microcontroller: Xtensa® dual-core 32-bit LX6 CPU (single-core variant also available)
- Clock Speed: Up to 240 MHz
- Performance: Up to 600 DMIPS
- SRAM: 520 KB
- ROM: 448 KB
- External Flash & RAM Support: Up to 16 MB external SPI flash and 8 MB PSRAM

2. Connectivity

- Wi-Fi: 802.11 b/g/n (2.4 GHz)
- Bluetooth: Bluetooth 4.2 + BLE (Bluetooth Low Energy)

3. Peripherals & Interfaces

- GPIOs: Up to 34 General Purpose Input/Output pins
- ADC: 12-bit, 18 channels
- DAC: 8-bit, 2 channels
- SPI: 3 SPI interfaces
- I2C: 2 I2C interfaces
- I2S: 2 I2S interfaces
- UART: 3 UART interfaces
- PWM: Supported
- Touch Sensors: 10 capacitive touch sensors

4. Power & Consumption

- Operating Voltage: 2.2V – 3.6V
- Power Modes: Active, light sleep, deep sleep, hibernation
- Current Consumption: ~240 mA (active mode), ~10 µA (deep sleep mode)

5. Security Features

- Secure Boot & Flash Encryption
- Hardware Random Number Generator (RNG)
- Cryptographic Hardware Acceleration

6. Development & Compatibility

- Programming Languages: C, C++, MicroPython, Arduino, Lua
- Supported Development Platforms:
  - ESP-IDF (Official SDK)
  - Arduino IDE
  - MicroPython
  - PlatformIO

Common Applications

- IoT Devices (Smart Home, Smart Agriculture)
- Wearable Electronics
- Industrial Automation
- Robotics & Drones
- Wireless Communication Systems

Eye Blink Sensor

The main component of the Eye Blink Sensor is the infrared sensor. The infrared sensor contains two parts. An IR transmitter and an IR receiver. The IR transmitter emits infrared waves onto the eye. While the receiver continuously searches for variations in the reflected waves which indicates that the eye has blinked or not. If the eye is closed then reflected waves will be received by the IR Receiver and the output of the sensor would be low. If the eye is open then all the IR rays will be absorbed by the eye and the output of the eye blink sensor would be high.

Eyeblink Sensor can be used in a variety of applications including robotics and mechatronics projects as it provides excellent results and is very economic to buy.

Eye Blink Sensor is compatible with Arduino, Raspberry Pi, AVR, PIC and almost all other microcontrollers. The IR Variation Across

the eye will vary as per eye blink. If the eye is closed output is low otherwise the output is high.

Working Principle of Eye Blink Senor:

The sensor has three pins as shown below :

Three pins GND (ground), 5V, OP (output)

This is how IR Radiations reflected back and sensed by the photodiode

An infrared sensor includes two parts, the emitter (transmitter) & the receiver (receiver), so this is jointly called an optocoupler or a photo-coupler. Here, IR LED is used as a transmitter whereas the IR photodiode is used as a receiver for reflected IR radiations.

The photodiode we are using here in the eye blink sensor is very sensitive to the infrared light generated through an infrared LED adjacent to the photodiode. The resistance of photodiode & output voltage can be changed in proportion to the infrared light obtained. This is the fundamental IR sensor working principle for the eye blink sensor. The comparator IC we are using here on the eye blink sensor board is LM358. This IC will compare the signal coming from the photodiode or IR receiver and the potentiometer on the board. The range of the eye blink sensor you can set by rotating the blue colour potentiometer on the board.

There are two types of IR sensors, active and passive. Passive IR sensors have only the IR receiver, not the Transmitter. But active

have both transmitter and receiver. Here we are using an active IR sensor.

Specification:

- Three pins GND (ground), 5V, OP (output)
- EYE BLINK Sensing indication by a red LED
- Instant output digital signal for directly Connecting to the microcontroller
- Compact Size
- Working Voltage +5V DC
- TTL output 5V or 0V

Applications of eye blink sensor:

- Can be used for counting the Eye Blinking frequency of a person.
- Can be used for avoiding fatal accidents on the road because of sleep.

- Can be used to check the state of the patient whether he is awake/conscious or asleep.
- Can be interfaced with any of the microcontroller devices.

MPU6050 Accelerometer and Gyroscope Module

The **MPU6050 module** is a Micro Electro-Mechanical Systems (**MEMS**) which consists of a 3-axis Accelerometer and 3-axis Gyroscope inside it. This helps us to measure acceleration, velocity, orientation, displacement and many other motion related parameter of a system or object.

MPU6050 Features

- MEMS 3-aixs accelerometer and 3-axis gyroscope values combined
- Power Supply: 3-5V
- Communication : I2C protocol
- Built-in 16-bit ADC provides high accuracy
- Built-in DMP provides high computational power
- Can be used to interface with other IIC devices like magnetometer
- Configurable IIC Address
- In-built Temperature sensor

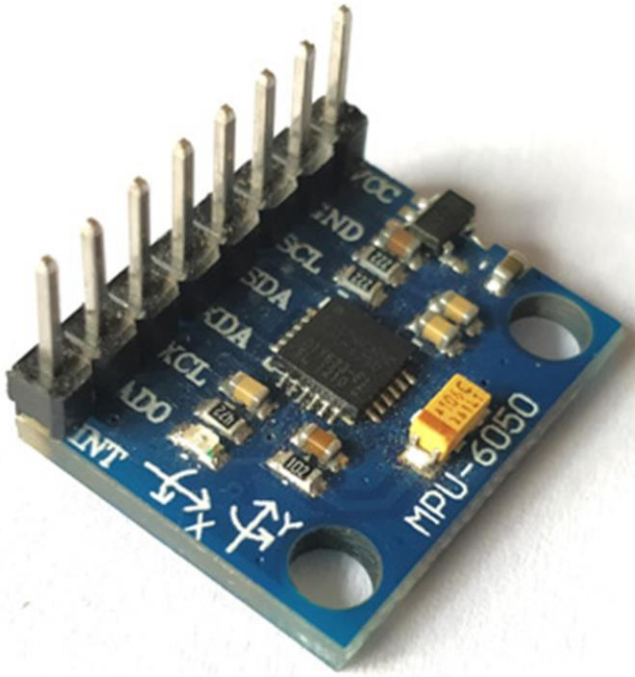
VCC
GND
SCL
SDA
XDA
XCL
ADO
INT
MPU-6050

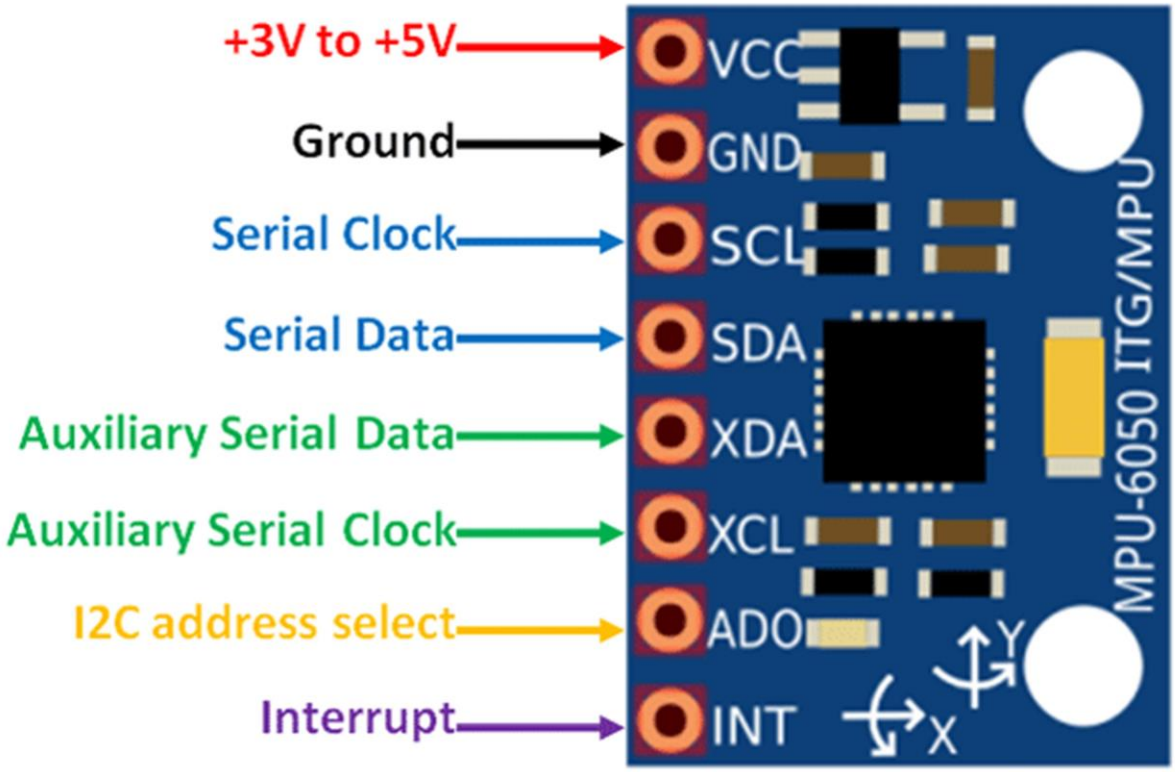
+3V to +5V
Ground
Serial Clock
Serial Data
Auxiliary Serial Data
Auxiliary Serial Clock
I2C address select
Interrupt
VCC
GND
SCL
SDA
XDA
XCL
ADO
INT
MPU-6050 ITG/MPU

The MPU6050 is a Micro Electro-Mechanical Systems (**MEMS**) which consists of a 3-axis Accelerometer and 3-axis Gyroscope inside it. This helps us to measure acceleration, velocity, orientation, displacement and many other motion related parameter of a system or object. This module also has a (DMP) Digital Motion Processor inside it which is powerful enough to perform complex calculation and thus free up the work for Microcontroller. The module also have two auxiliary pins which can be used to interface external IIC modules like an magnetometer, however it is optional. Since the IIC address of the module is configurable more than one **MPU6050 sensor** can be interfaced to a Microcontroller using the AD0 pin. This module also has well documented and revised libraries available hence it’s very easy to use with famous platforms like Arduino.

BO DC MOTOR

The BO DC motor is a compact, lightweight, and cost-effective motor commonly used in robotics and automation projects. It provides good torque and efficiency at lower operating voltages, making it an ideal choice for small and medium-sized robotic applications. This report discusses the specifications, working principle, features, and applications of the BO DC motor.

Specifications

- **Motor Type:** Single Shaft BO Motor - Straight
- **Shaft Length:** 7 mm
- **Shaft Diameter:** 5.5 mm
- **Size:** 55 x 48 x 23 mm
- **Operating Voltage:** 3V to 12V
- **Current (No Load):** 40-180mA
- **Speed:** 100 RPM (at 12V)
- **Output Torque:** 0.35 kg cm

- **Body Material:** Plastic Gear Housing
- **Weight:** Lightweight for easy integration

Working Principle

The BO DC motor operates on the principle of **electromagnetic induction**. When an electric current is supplied to the motor, it flows through the armature windings, creating a magnetic field. This field interacts with the permanent magnet inside the motor, generating torque that causes the rotor to spin. The direction of rotation can be controlled by reversing the polarity of the applied voltage.

Key Working Mechanism:

1. **Electromagnetic Interaction:** When current flows, the interaction between the armature coil and the magnetic field creates rotational motion.

2. **Commutation:** The DC motor uses a commutator and brushes to reverse the current direction, ensuring continuous rotation.
3. **Torque Generation:** The amount of torque generated depends on the current supplied and the strength of the magnetic field.
4. **Speed Control:** The motor speed can be regulated using **Pulse Width Modulation (PWM)**, which controls the voltage applied to the motor.

GPS MODULE

The Global Positioning System (GPS) is a crucial technology that has drastically transformed numerous industries, from transport and logistics to outdoor sports. The primary instrument in leveraging GPS technology is the GPS module, an electronic device that communicates with GPS satellites to provide geographical location data.

How Does a GPS Module Work?

GPS modules work based on a system of satellites that orbit the Earth, transmitting precise microwave signals. These modules receive these signals and use the data to calculate the user's exact location through a process known as trilateration. Trilateration involves determining the distances to at least three satellites and, using these measurements, pinpoints the device's position on the globe.

Components of a GPS Module

1. **Antenna:** This component receives GPS signals from satellites. The quality of an antenna significantly influences the performance of a GPS module.

2. **RF Amplifier:** This strengthens the GPS signal for better processing.

3. **GPS Receiver:** The receiver decodes the satellite signals into a format that the device can interpret.

4. **Microcontroller:** This acts as the 'brain' of the GPS module, handling calculations and data processing.

GPS modules' accuracy and precision depend on several factors, including the quality of the GPS module, atmospheric conditions, and the satellite's positioning. The standard GPS module provides an accuracy level within 10 to 15 meters. However, advanced systems with Differential GPS (DGPS) or Real-Time Kinematic (RTK) methods can achieve sub-meter or even centimeter-level accuracy.

LCD DISPLAY

LCD (Liquid Crystal Display) screen is an electronic display module and find a wide range of applications. A 16x2 LCD display is very basic module and is very commonly used in various devices and circuits. These modules are preferred over seven segments and other multi segment LEDs. The reasons being: LCDs are economical; easily programmable; have no limitation of displaying special & even custom characters (unlike in seven segments), animations and so on.

A 16x2 LCD means it can display 16 characters per line and there are 2 such lines. In this LCD each character is displayed in 5x7 pixel matrix. This LCD has two registers, namely, Command and Data.

The command register stores the command instructions given to the LCD. A command is an instruction given to LCD to do a predefined task like initializing it, clearing its screen, setting the cursor position, controlling display etc. The data register stores the data to be displayed on the LCD. The data is the ASCII value of the character to be displayed on the LCD.

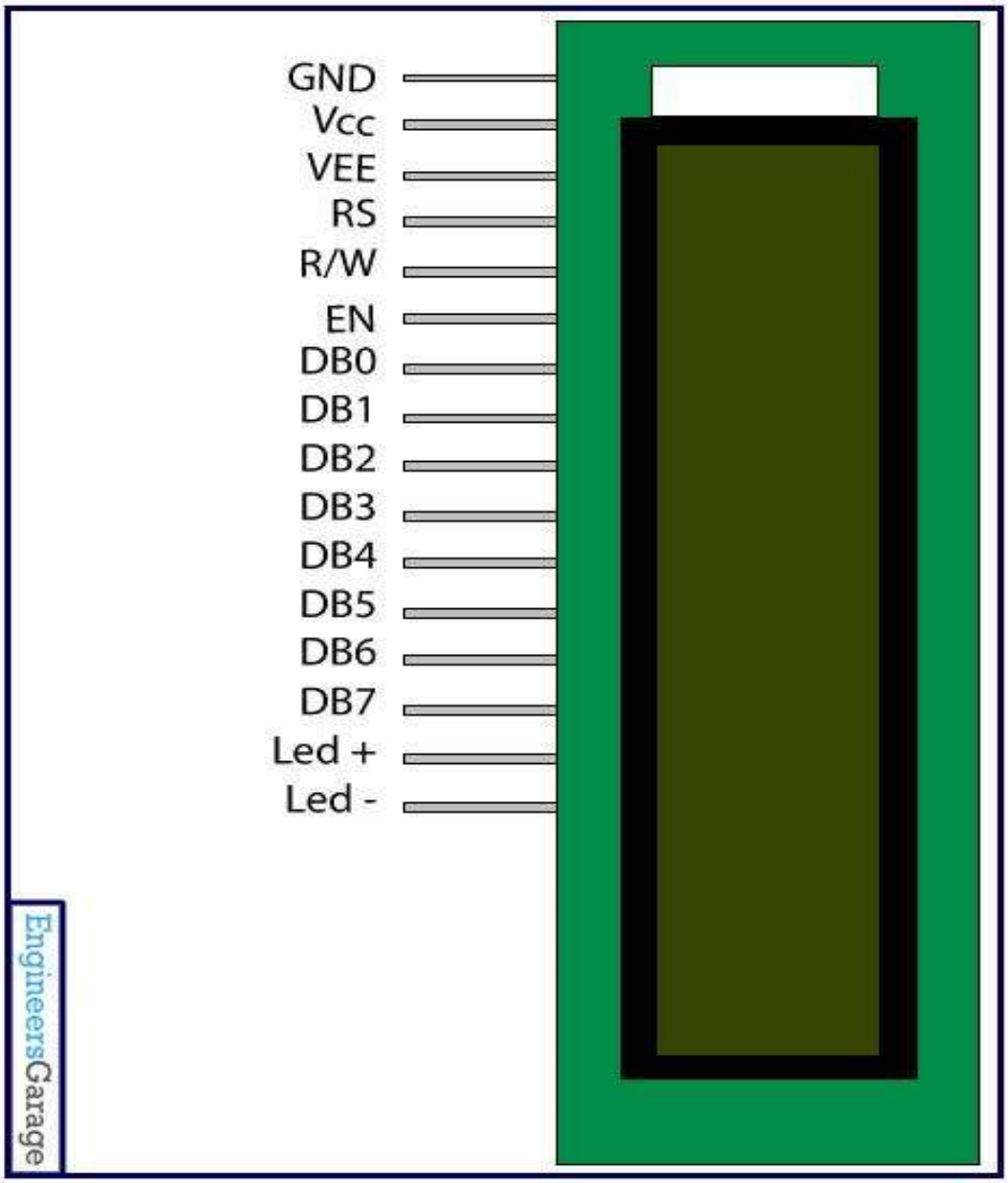
GND
Vcc
VEE
RS
R/W
EN
DB0
DB1
DB2
DB3
DB4
DB5
DB6
DB7
Led +
Led -
EngineersGarage

LM2596 SIMPLE SWITCHER® Power Converter 150-kHz 3-A Step-Down Voltage Regulator

The LM2596 series of regulators are monolithic integrated circuits that provide all the active functions for a step-down (buck) switching regulator, capable of driving a 3-A load with excellent line and load regulation. These devices are available in fixed output voltages of 3.3 V,5V,12V, and an adjustable output version.
Requiring a minimum number of external components, these regulators are simple to use and include internal frequency compensation, and a fixed frequency oscillator.
The LM2596 series operates at a switching frequency of 150 kHz, thus allowing smaller sized filter components than what can be required with lower frequency switching regulators. Available in a standard 5-pin TO-220 package with several different lead bend options, and a 5-pin TO-263 surface mount
package.

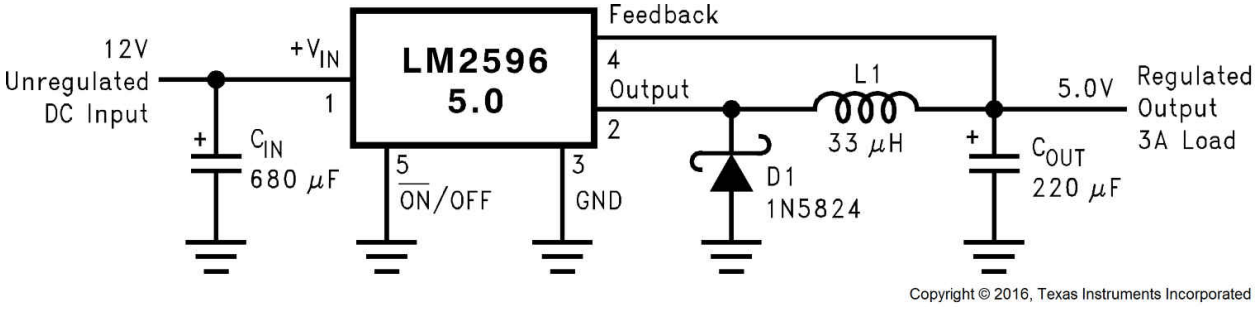

Software Specifications

- **Programming Language:** Embedded C
- **Development Environment:** Arduino IDE
- **Communication Protocols:** I2C (for LCD and MPU6050), PWM (for motor control), Serial (for GPS and sensor data)
- **IoT Platform:** Blynk App for remote notifications
- **Libraries Used:** Wire.h, MPU6050.h, LiquidCrystal_I2C.h, BlynkSimpleEsp32.h, Servo.h, etc.

➢ ESP32 Libraries

ESP32 is a powerful microcontroller with built-in WiFi and Bluetooth, and it can be programmed using the Arduino IDE with the help of special libraries. These libraries extend the capabilities of the ESP32, allowing it to work with various sensors, modules, and communication protocols.

➢ Arduino IDE

The Arduino IDE (Integrated Development Environment) is a software application used for writing, compiling, and uploading code to Arduino microcontrollers. It is open-source and supports multiple platforms, including Windows, macOS, and Linux.

➢ C/C++ Programming

Arduino IDE primarily uses C and C++ for programming microcontrollers like Arduino boards and ESP32. It simplifies embedded programming by providing built-in functions and libraries, but at its core, it follows standard C/C++ principles.

➢ Blynk Iot platform

Blynk IoT platform provides Real-time data transmission by enables devices to send and receive data instantly, making it ideal for monitoring and controlling IoT applications.

BLOCK DIAGRAM

DRIVER DROWSINESS DETECTION

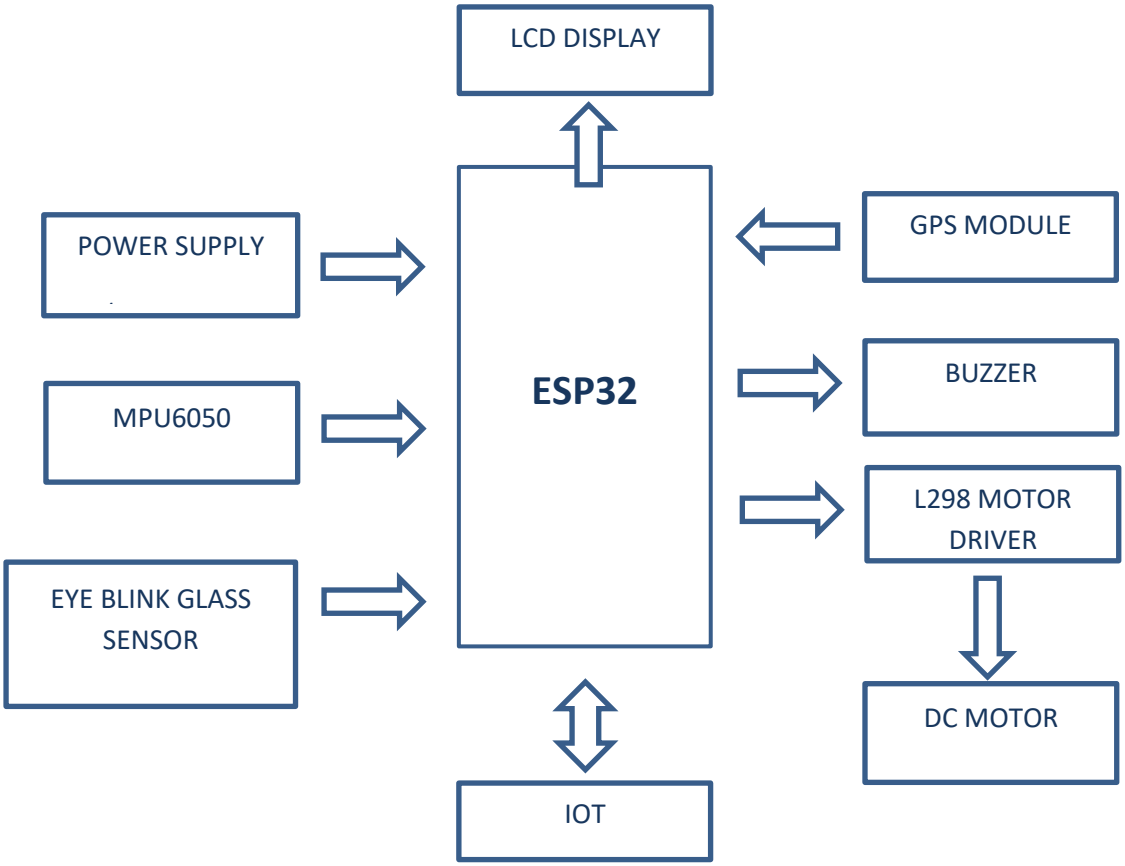

CIRCUIT DIAGRAM

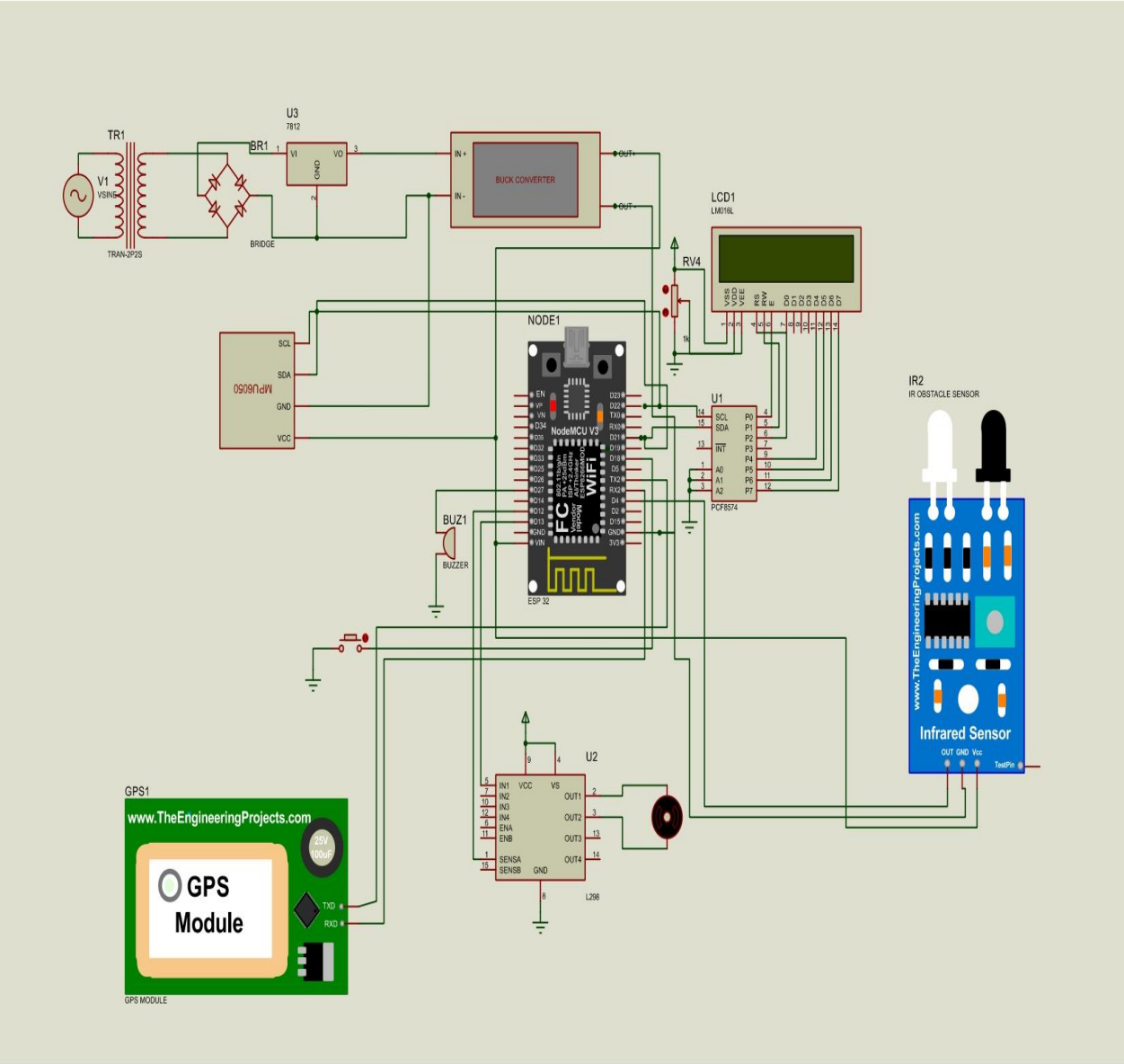

Working Principle

1. The **Eye Blink Sensor** continuously monitors the driver's eye status.
2. The **MPU6050 Sensor** detects unusual head movements indicative of drowsiness.
3. If prolonged eye closure or excessive head nodding is detected, the system triggers a safety response.
4. The **L298 Motor Driver** reduces the speed of the DC motor (simulating engine control) using PWM signals.
5. The **ESP32 Microcontroller** processes sensor data and sends real-time alerts via the **Blynk IoT App**.
6. The **GPS Module** transmits the driver’s location to predefined contacts.
7. The **LCD I2C Display** provides real-time updates on sensor readings and system status.
8. The **LM2596 Buck Converter** regulates the 12V input down to 5V for powering the system components.

Program

```
//goniwe5972@maonyn.com
//Info@2025

#define BLYNK_PRINT Serial
#include <WiFi.h>
#include <WiFiClient.h>
#include <BlynkSimpleEsp32.h>

#include <Adafruit_MPU6050.h>
#include <Adafruit_Sensor.h>
#include <Wire.h>

Adafruit_MPU6050 mpu;

#define RXD2 16  // RX pin for Serial2
#define TXD2 17  // TX pin for Serial2

float latitude = 10.6868899, longitude = 76.7230358;
```

```
String s = "www.google.com/maps/dir/";

#define BLYNK_TEMPLATE_ID "TMPL3BSc3Wecu"
#define BLYNK_TEMPLATE_NAME "DROWSINESS DETECTION"
#define BLYNK_AUTH_TOKEN "glKE6tP3gnuU21Uvqd3dgTCJU_hlBozu"

char ssid[] = "IOT";
char pass[] = "123456789";
char auth[] = BLYNK_AUTH_TOKEN;

#include <LCD_I2C.h>

LCD_I2C lcd(0x27, 16, 2); // Default address of most PCF8574 modules,
change according

#include <EveryTimer.h>
#define PERIOD_MS 1000

EveryTimer timer;
```

```
bool active = true;


#define ir 4
#define buzzer 27
#define motor 13
#define pwmpin 12
#define vibmotor 25
#define btn 18


int sec, iotsend;


void setup() {
  // put your setup code here, to run once:
  Serial.begin(9600);


  Serial2.begin(115200, SERIAL_8N1, RXD2, TXD2); // Initialize Serial2
for EM-18
  pinMode(btn, INPUT_PULLUP);
  lcd.begin();
  lcd.backlight();
```

```
lcd.setCursor(0, 0);
lcd.print("   DROWSINESS ");
lcd.setCursor(0, 1);
lcd.print("   DETECTION");
pinMode(ir, INPUT);
pinMode(buzzer, OUTPUT);
pinMode(motor, OUTPUT);
pinMode(pwmpin, OUTPUT);

pinMode(vibmotor, OUTPUT);
digitalWrite(vibmotor, LOW);
timer.Every(PERIOD_MS, action);
// Try to initialize!
if (!mpu.begin()) {
  Serial.println("Failed to find MPU6050 chip");

}

Blynk.begin(auth, ssid, pass, "blynk.cloud", 80);
```

```
  lcd.clear();
}

void loop() {
  // put your main code here, to run repeatedl
  if (Serial2.available()) {
    String nmea = Serial2.readStringUntil('\n'); // Read one NMEA
sentence
    if (nmea.startsWith("$GNGGA")) {
      Serial.println("Raw NMEA: " + nmea);
      parseGPS(nmea);
    }
  }

  s = "www.google.com/maps/dir/";
  s += String(latitude, 8);
  s += ",";
  s += String(longitude, 8);
  s += "/";
```

```
/* Get new sensor events with the readings */
sensors_event_t a, g, temp;
mpu.getEvent(&a, &g, &temp);



if (digitalRead(ir) == HIGH) {
  timer.Update();
}
else {
  sec = 0;
}



lcd.setCursor(0, 1);
lcd.print("ACC:");
if (a.acceleration.y >= 0) {
  lcd.print(a.acceleration.y);
}
lcd.print("                    ");
```

```
lcd.setCursor(7, 0);
if (digitalRead(btn) == LOW) {
  lcd.print("ON ");
}
else {
  lcd.print("OFF");
}

if ((sec >= 4 || a.acceleration.y >= 6) && digitalRead(btn) == LOW) {
  analogWrite(pwmpin, 50);
  digitalWrite(buzzer, HIGH);
  digitalWrite(motor, HIGH);
  digitalWrite(vibmotor, HIGH);
  lcd.setCursor(0, 1);
  lcd.print("DROWSINESS DETECTED!");
  Blynk.logEvent("msg", "DROWSINESS DETECTED!");
}
else if (digitalRead(btn) == HIGH) {
  digitalWrite(motor, LOW);
  analogWrite(pwmpin, 0);
```

```
}
else {

  lcd.setCursor(0, 1);

  digitalWrite(vibmotor, LOW);
  Serial.println("NORMAL");
  digitalWrite(buzzer, LOW);
  digitalWrite(motor, HIGH);
  analogWrite(pwmpin, 65);
}
lcd.setCursor(0, 0);
lcd.print("BT:");
if (sec <= 9) {
  lcd.print("0");
  lcd.print(sec);
}
else if (sec <= 99) {
  lcd.print(sec);
}
```

```
  if (iotsend == 1)
  {
    Serial.println("IOT SEND DATA.....");
    Blynk.virtualWrite(V0, s);
    if (sec >= 3) {
      Blynk.virtualWrite(V1, "DROWSINESS DETECTED!");
      Blynk.logEvent("msg", "DROWSINESS DETECTED!");
      Serial.println("DROWSINESS IOT MSG");
    }
    else {
      Blynk.virtualWrite(V1, "                                        ");
    }
    delay(2000);
  }
  Blynk.run();
  delay(300);
}
```

Advantages and disadvantages

Advantages

- ✓ Reduces the risk of accidents caused by driver drowsiness
- ✓ Real-time monitoring and automatic alerts
- ✓ Integration with IoT for remote tracking
- ✓ Speed control mechanism for additional safety
- ✓ Low power consumption and cost-effective implementation

Disadvantages

- High-end systems can be expensive.
- Sensors may not work well in poor lighting.
- False alarms may disturb the driver.

Conclusion

The drowsiness detection system using ESP32 successfully integrates multiple sensors to monitor driver alertness in real-time. The combination of an eye blink sensor and MPU6050 accelerometer allows accurate detection of drowsiness symptoms, while the L298 motor driver ensures timely intervention by controlling vehicle speed. The system's IoT capability through the Blynk app and GPS tracking enhances safety by notifying emergency contacts. This project demonstrates a practical and scalable approach to preventing drowsiness-related accidents in modern vehicles.