Note: Machine from FIle,
critical dimensions shown.

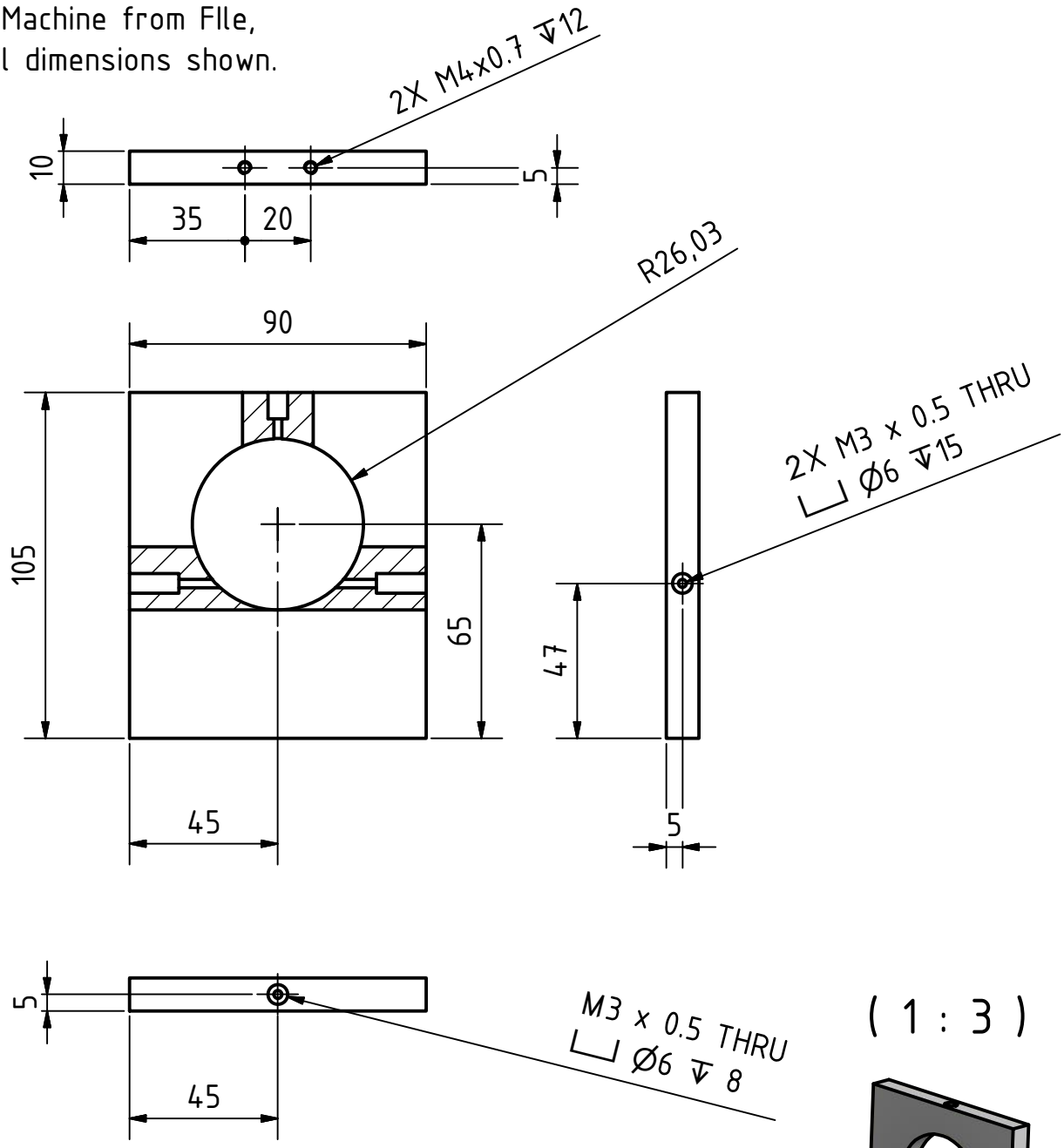

(1 : 3)

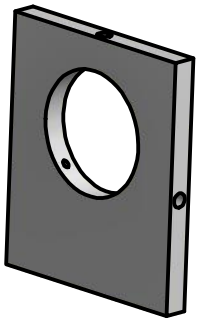

contact: ✉ blaise-anthony.kuo-tiong@students.mq.edu.au / ☎ 0452483802

General Tolerances ISO 2768-mK	Scale: 1 : 2	Quantity: 1	Mass: N/A
	Material: Aluminum		

	Date	Name
Drawn by	5/03/2018	Blaise C. Kuo Tiong
Checked		

Part Name:

Macquarie University
Labor: 42410575
Material: 5021100 (C. Schwab)

Drawing-No.: 2018.CAM.02_shortmount-zwo

Sheet: 3

A4

State	Modification	Date	Name

Created in Inventor 2017