Lab 05 - La Quinta is Spanish for next to Denny's, Pt. 2

Max Asmar

Introduction

In this lab we revisit the Denny's and La Quinta Inn and Suites data we visualized in Lab 04. Last time, we created maps to visually assess whether these establishments tend to be located near each other. This time, we'll take a more quantitative approach by actually calculating the distances between locations.

This lab builds directly on Lab 04. Make sure you understand the concepts from that lab before proceeding.

Estimated time: 90-120 minutes

Learning Goals

By the end of this lab, you will be able to:

- Join two datasets using `full_join()`
- Work with custom functions in R
- Calculate distances between geographic coordinates
- Use `group_by()` and `summarise()` to find minimum values
- Apply the same analysis workflow to multiple datasets
- Compare distributions across different geographic regions

Prerequisites

Before you begin, make sure you have:

- Completed Lab 04
- Understand latitude and longitude coordinates
- Watched lectures on joins and functions
- Forked the lab-instructions repository

Getting Started

Navigate to your forked `lab-instructions` repository in JupyterHub, open the `Lab05` folder, and open the R Markdown document `lab-05.Rmd`.

Verify Your Setup

Before proceeding:

Step 1. Open `lab-05.Rmd` in RStudio

Step 2. Check that the Git pane shows YOUR username (not the course organization)

Step 3. Click **Knit** to make sure the document compiles

Warm Up

Before we introduce the data, let's warm up with some simple exercises.

Step 1: Update the YAML, changing the author name to your name.

Step 2: Knit the document.

Step 3: Commit your changes with message "Updated author name".

Step 4: Push to GitHub and verify the changes are visible in your repo.

Knit, commit with message "Completed warm up", and push your changes.

Completed warm up

Packages

We'll use the **tidyverse** package for much of the data wrangling and visualisation and the data lives in the **dsbox** package. These packages are already installed for you. You can load them by running the following in your Console:

```
library(tidyverse)
library(dsbox)
```

Data

Remember that the datasets we'll use are called `dennys` and `laquinta` from the **dsbox** package. Since the datasets are distributed with the package, we don't need to load them separately; they become available to us when we load the package. You can find out more about the datasets by inspecting their documentation, which you can access by running `?dennys` and `?laquinta` in the Console or using the Help menu in RStudio to search for `dennys` or `laquinta`. You can also find this information here and here.

Checkpoint: Run `glimpse(dennys)` and `glimpse(laquinta)` in your Console to verify the data loaded correctly.

Exercises

Filtering for Alaska

We'll start our analysis by focusing on one state: Alaska.

Exercise 1

Filter the Denny's dataframe for Alaska (AK) and save the result as `dn_ak`. How many Denny's locations are there in Alaska?

```
dn_ak <- dennys %>%            # Start with dennys dataset
  filter(state == "AK")         # Keep only rows where state is AK
```

What this code does:

- Takes the `dennys` dataset
- Filters for rows where `state` equals "AK"
- Saves the result as `dn_ak` using the assignment operator `<-`

How many Denny's locations are in Alaska? Use inline code to report the number.

Your answer: There are 3 Denny's locations in Alaska.

Hint: You can use inline code with `nrow(dn_ak)` to get the count.

Exercise 2

Filter the La Quinta dataframe for Alaska (AK) and save the result as `lq_ak`. How many La Quinta locations are there in Alaska?

```
lq_ak <- laquinta %>%          # Start with laquinta dataset
  filter(state == "AK")         # Keep only rows where state is AK
```

What this code does:

- Takes the `laquinta` dataset
- Filters for rows where `state` equals "AK"
- Saves the result as `lq_ak`

How many La Quinta locations are in Alaska? Use inline code to report the number.

Your answer: There are 2 La Quinta locations in Alaska.

Knit, commit with message "Completed Exercises 1-2", and push your changes.

Understanding Pairings

Next we'll calculate the distance between all Denny's and all La Quinta locations in Alaska. Let's take this step by step:

Step 1: There are 3 Denny's and 2 La Quinta locations in Alaska. (If you answered differently above, you might want to recheck your answers.)

Step 2: Let's focus on the first Denny's location. We'll need to calculate two distances for it: (1) distance between Denny's 1 and La Quinta 1 and (2) distance between Denny's 1 and La Quinta 2.

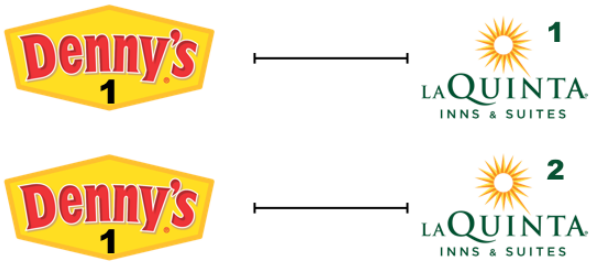

Step 3: Now let's consider all Denny's locations.

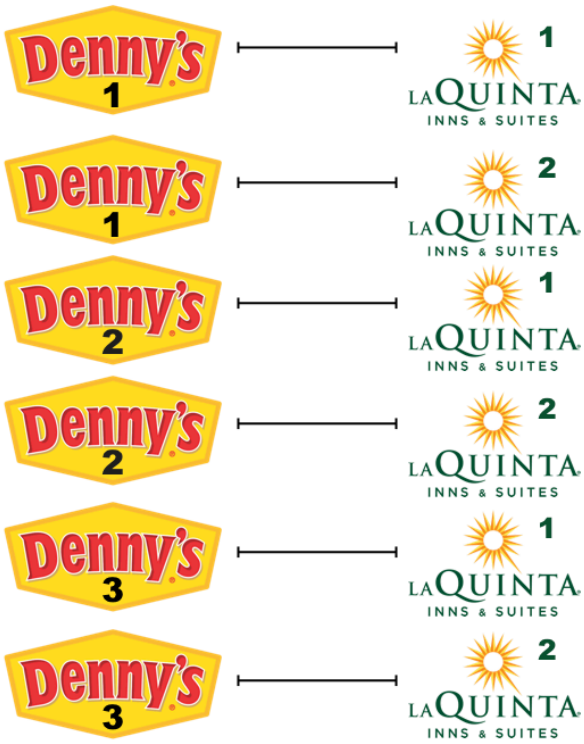

Exercise 3

How many pairings are there between all Denny's and all La Quinta locations in Alaska, i.e. how many distances do we need to calculate between the locations of these establishments in Alaska?

Hint: If there are 3 Denny's and 2 La Quinta locations, how many total pairings are there?

Your answer: There are 6 pairings between Denny's and La Quinta locations in Alaska.

Joining Data Frames

In order to calculate these distances we need to first restructure our data to pair the Denny's and La Quinta locations. To do so, we will join the two data frames.

We have six join options in R. Each of these join functions take at least three arguments: `x`, `y`, and `by`.

- `x` and `y` are data frames to join
- `by` is the variable(s) to join by

Four of these join functions combine variables from the two data frames:

These are called **mutating joins**.

- `inner_join()`: return all rows from `x` where there are matching values in `y`, and all columns from `x` and `y`.
- `left_join()`: return all rows from `x`, and all columns from `x` and `y`. Rows in x with no match in y will have NA values in the new columns.
- `right_join()`: return all rows from `y`, and all columns from `x` and `y`. Rows in y with no match in x will have NA values in the new columns.
- `full_join()`: return all rows and all columns from both `x` and `y`. Where there are not matching values, returns NA for the one missing.

And the other two join functions only keep cases from the left-hand data frame, and are called **filtering joins**. We'll learn about these another time but you can find out more about the join functions in the help files for any one of them, e.g. `?full_join`.

In practice we mostly use mutating joins. In this case we want to keep all rows and columns from both `dn_ak` and `lq_ak` data frames. So we will use a `full_join`.

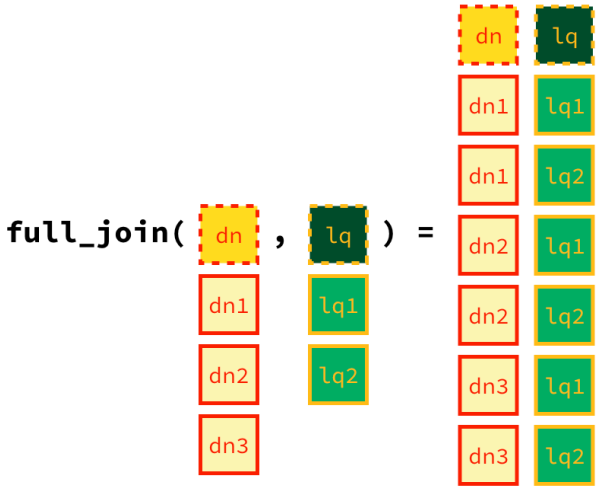

Figure 1: Full join of Denny's and La Quinta locations in AK

Let's join the data on Denny's and La Quinta locations in Alaska:

```
dn_lq_ak <- full_join(dn_ak, lq_ak, by = "state")  # Join the two datasets
```

```
## Warning in full_join(dn_ak, lq_ak, by = "state"): Detected an unexpected many-to-many relationship be
## i Row 1 of `x` matches multiple rows in `y`.
## i Row 1 of `y` matches multiple rows in `x`.
## i If a many-to-many relationship is expected, set `relationship =
##   "many-to-many"` to silence this warning.
```

What this code does:

- Takes `dn_ak` (the first data frame) and `lq_ak` (the second data frame)
- Joins them together using the `state` variable as the matching key
- Since both datasets have `state = "AK"`, every row in `dn_ak` gets matched with every row in `lq_ak`
- Creates all possible pairings (this is called a Cartesian product when joining on a constant value)
- Saves the result as `dn_lq_ak`

View the result: Run `dn_lq_ak` in your Console to see what the joined data looks like.

Exercise 4

How many observations are in the joined `dn_lq_ak` data frame? What are the names of the variables in this data frame?

Your answers:

Number of observations: There are 6 observations in the joined dataframe.

Variable names: Run `names(dn_lq_ak)` in your Console and list them below:

The names of the variables in the joined dataframe are "address.x", "city.x", "state", "zip.x", "longitude.x", "latitude.x", "address.y", "city.y", "zip.y", "longitude.y", and "latitude.y".

Note about variable names: You'll notice `.x` and `.y` suffixes on many variables. The `.x` means the variable comes from the first data frame (`dn_ak`), and `.y` means it comes from the second data frame (`lq_ak`). These suffixes are added because both data frames have variables with the same names (like `address`, `city`, `longitude`, `latitude`), and R can't have duplicate column names.

Knit, commit with message "Completed Exercises 3-4", and push your changes.

Calculating Distances

Now that we have the data in the format we wanted, all that is left is to calculate the distances between the pairs.

Exercise 5

What function from the tidyverse do we use to add a new variable to a data frame while keeping the existing variables?

Your answer: We use the mutate() function.

One way of calculating the distance between any two points on the earth is to use the Haversine distance formula. This formula takes into account the fact that the earth is not flat, but instead spherical.

This function is not available in base R, but here it is as a custom function we can use:

```
haversine <- function(long1, lat1, long2, lat2, round = 3) {
  # convert to radians
  long1 = long1 * pi / 180
  lat1  = lat1  * pi / 180
  long2 = long2 * pi / 180
  lat2  = lat2  * pi / 180

  R = 6371 # Earth mean radius in km

  a = sin((lat2 - lat1)/2)^2 + cos(lat1) * cos(lat2) * sin((long2 - long1)/2)^2
  d = R * 2 * asin(sqrt(a))

  return( round(d,round) ) # distance in km
}
```

What this function does:

- Takes 5 arguments: longitude and latitude for two locations, plus a rounding parameter
- Converts coordinates from degrees to radians (required for trig functions)
- Uses the Haversine formula to calculate the great-circle distance
- Returns the distance in kilometers, rounded to 3 decimal places by default

You don't need to understand the math! Just know that you give it two sets of coordinates and it gives you the distance in kilometers.

Exercise 6

Calculate the distances between all pairs of Denny's and La Quinta locations and save this variable as `distance`. Make sure to save this variable in the `dn_lq_ak` data frame so that you can use it later.

Remember: Use the `<-` assignment operator to save the result back to `dn_lq_ak`, just like in Lab 04 when we added the `country` variable.

```
# Remember to change eval=FALSE to eval=TRUE!
dn_lq_ak <- dn_lq_ak %>%
  mutate(distance = haversine(
    long1 = longitude.x,      # longitude from Denny's (has .x suffix)
    lat1 = latitude.x,       # latitude from Denny's (has .x suffix)
    long2 = longitude.y,      # longitude from La Quinta (has .y suffix)
    lat2 = latitude.y        # latitude from La Quinta (has .y suffix)
  ))
```

Hints:

- Denny's coordinates have `.x` suffix: `longitude.x` and `latitude.x`
- La Quinta coordinates have `.y` suffix: `longitude.y` and `latitude.y`
- Don't forget to save the result back to `dn_lq_ak` using `<-`

Verify it worked: Run `names(dn_lq_ak)` - you should see `distance` as one of the variables.

Exercise 7

Calculate the minimum distance between a Denny's and La Quinta for each Denny's location. To do so we group by Denny's locations and calculate a new variable that stores the information for the minimum distance.

```
dn_lq_ak_mindist <- dn_lq_ak %>%
  group_by(address.x) %>%              # Group by each Denny's address
  summarise(closest = min(distance))   # Find the minimum distance for each group
```

What this code does:

- Takes the `dn_lq_ak` dataset (which has all pairings)
- Groups by `address.x` (each unique Denny's location)
- For each Denny's, finds the minimum distance to any La Quinta
- Creates a new dataset with one row per Denny's showing its closest La Quinta distance
- Saves this as `dn_lq_ak_mindist`

View the result: Run `dn_lq_ak_mindist` in your Console to see the minimum distances.

Knit, commit with message "Completed Exercises 5-7", and push your changes.

Exercise 8

Describe the distribution of the distances between Denny's and the **nearest** La Quinta locations in Alaska. Also include an appropriate visualization and relevant summary statistics.

Create a visualization:

```
# Remember to change eval=FALSE to eval=TRUE!
ggplot(data = dn_lq_ak_mindist, aes(x = closest)) +
  geom_histogram(binwidth = 1) +
  labs(
    title = "Distribution of distances between Denny's and La Quinta locations in Alaska",
    x = "Distance (km)",
    y = "Frequency"
  )
```

Calculate summary statistics:

```
# Remember to change eval=FALSE to eval=TRUE!
dn_lq_ak_mindist %>%
  summarise(
    min = min(closest),
    max = max(closest),
    mean = mean(closest),
    median = median(closest),
    sd = sd(closest)
  )
```

```
## # A tibble: 1 x 5
##     min   max  mean median    sd
##   <dbl> <dbl> <dbl>  <dbl> <dbl>
## 1  2.04  6.00  4.41   5.20  2.10
```

Describe the distribution:

Consider shape, center, spread, and any unusual observations.

Your answer:

I notice that there is a mean closest distance of 4.41km and median closest distance of 5.20km. The standard deviation of the closest distances between La Quinta and Denny's in Alaska is 2.10. The distribution is very small, as there are only 3 observations of closest distances between Denny's and La Quinta in the dataset.

Knit, commit with message "Completed Exercise 8", and push your changes.

Repeat the Analysis for Other States

Now that you've completed the analysis for Alaska, you'll repeat the same steps for other states. Use the Alaska analysis as a template!

Exercise 9

Repeat the same analysis for North Carolina:

Step (i) filter Denny's and La Quinta Data Frames for NC

Step (ii) join these data frames to get a complete list of all possible pairings

Step (iii) calculate the distances between all possible pairings of Denny's and La Quinta in NC

Step (iv) find the minimum distance between each Denny's and La Quinta location

Step (v) visualize and describe the distribution of these shortest distances using appropriate summary statistics

Here's a template you can adapt from the Alaska code:

```
# Remember to change eval=FALSE to eval=TRUE!

# (i) Filter for NC
dn_nc <- dennys %>%
  filter(state == "NC")

lq_nc <- laquinta %>%
  filter(state == "NC")

# (ii) Join the data
dn_lq_nc <- full_join(dn_nc, lq_nc, by = "state")
```

```
## Warning in full_join(dn_nc, lq_nc, by = "state"): Detected an unexpected many-to-many relationship be
## i Row 1 of `x` matches multiple rows in `y`.
```

```
## i Row 1 of `y` matches multiple rows in `x`.
## i If a many-to-many relationship is expected, set `relationship =
##   "many-to-many"` to silence this warning.
```

```r
# (iii) Calculate distances
dn_lq_nc <- dn_lq_nc %>%
  mutate(distance = haversine(
    long1 = longitude.x,
    lat1 = latitude.x,
    long2 = longitude.y,
    lat2 = latitude.y
  ))

# (iv) Find minimum distances
dn_lq_nc_mindist <- dn_lq_nc %>%
  group_by(address.x) %>%
  summarise(closest = min(distance))

# (v) Visualize
ggplot(data = dn_lq_nc_mindist, aes(x = closest)) +
  geom_histogram(binwidth = 15) +
  labs(
    title = "Distribution of closest distances between Denny's and La Quinta in North Carolina",
    x = "Distance (km)",
    y = "Frequency"
  )
```

```r
# Summary statistics
dn_lq_nc_mindist %>%
  summarise(
```

```
    min = min(closest),
    max = max(closest),
    mean = mean(closest),
    median = median(closest),
    sd = sd(closest)
  )
```

```
## # A tibble: 1 x 5
##     min   max  mean median    sd
##   <dbl> <dbl> <dbl>  <dbl> <dbl>
## 1  1.78  188.  65.4   53.5  53.4
```

Describe the distribution for North Carolina:

I notice that there is a mean closest distance of 65.4km and median closest distance of 53.5km. The standard deviation of the closest distances between La Quinta and Denny's in North Carolina is 53.4. The distribution is noticeably larger than the Alaska distribution, which only had 3 points. This distribution has 28 points and is skewed right.

Knit, commit with message "Completed Exercise 9", and push your changes.

Exercise 10

Repeat the same analysis for Texas.

Adapt the template from Exercise 9, changing NC to TX:

```
# Remember to change eval=FALSE to eval=TRUE!
# Your code here - adapt from Exercise 9

# (i) Filter for TX
dn_tx <- dennys %>%
  filter(state == "TX")

lq_tx <- laquinta %>%
  filter(state == "TX")

# (ii) Join the data
dn_lq_tx <- full_join(dn_tx, lq_tx, by = "state")
```

```
## Warning in full_join(dn_tx, lq_tx, by = "state"): Detected an unexpected many-to-many relationship be
## i Row 1 of `x` matches multiple rows in `y`.
## i Row 1 of `y` matches multiple rows in `x`.
## i If a many-to-many relationship is expected, set `relationship =
##   "many-to-many"` to silence this warning.
```

```r
# (iii) Calculate distances
dn_lq_tx <- dn_lq_tx %>%
  mutate(distance = haversine(
    long1 = longitude.x,
    lat1 = latitude.x,
    long2 = longitude.y,
    lat2 = latitude.y
  ))

# (iv) Find minimum distances
dn_lq_tx_mindist <- dn_lq_tx %>%
  group_by(address.x) %>%
  summarise(closest = min(distance))

# (v) Visualize
ggplot(data = dn_lq_tx_mindist, aes(x = closest)) +
  geom_histogram(binwidth = 5) +
  labs(
    title = "Distribution of closest distances between Denny's and La Quinta in Texas",
    x = "Distance (km)",
    y = "Frequency"
  )
```

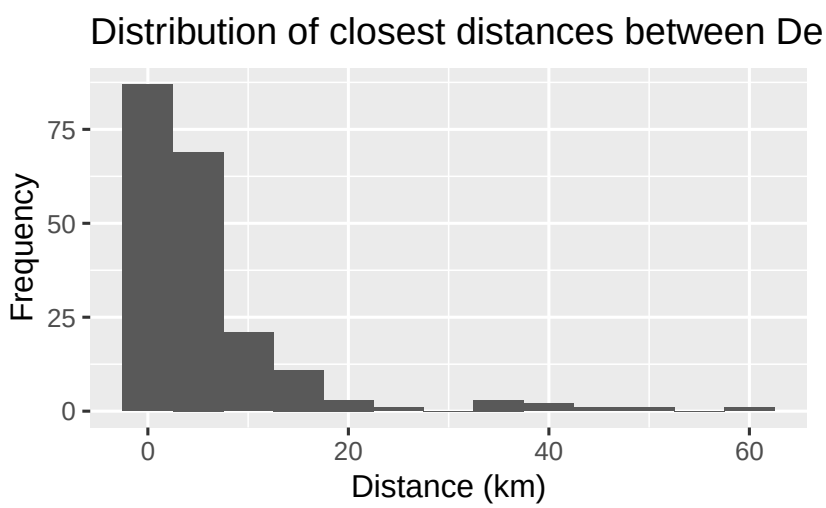


```r
# Summary statistics
dn_lq_tx_mindist %>%
  summarise(
    min = min(closest),
    max = max(closest),
    mean = mean(closest),
    median = median(closest),
```

```
    sd = sd(closest)
  )
```

```
## # A tibble: 1 x 5
##     min   max  mean median    sd
##   <dbl> <dbl> <dbl>  <dbl> <dbl>
## 1 0.016  60.6  5.79   3.37  8.83
```

Describe the distribution for Texas:

I notice that there is a mean closest distance of 5.79km and median closest distance of 3.37km. The standard deviation of the closest distances between La Quinta and Denny's in Texas is 8.83. The distribution is noticeably larger than both the Alaska and NC distributions, which only had 3 and 28 points, respectively. This distribution has 200 points and is skewed right. The Denny's and La Quinta locations here seem to be a lot closer than the locations in North Carolina.

Knit, commit with message "Completed Exercise 10", and push your changes.

Exercise 11

Repeat the same analysis for a state of your choosing, different than the ones we covered so far.

Which state did you choose? I chose California to do this analysis on.

```
# Remember to change eval=FALSE to eval=TRUE!
# Your code here - adapt from Exercise 9
# (i) Filter for CA
dn_ca <- dennys %>%
  filter(state == "CA")

lq_ca <- laquinta %>%
  filter(state == "CA")

# (ii) Join the data
dn_lq_ca <- full_join(dn_ca, lq_ca, by = "state")
```

```
## Warning in full_join(dn_ca, lq_ca, by = "state"): Detected an unexpected many-to-many relationship be
## i Row 1 of `x` matches multiple rows in `y`.
## i Row 1 of `y` matches multiple rows in `x`.
## i If a many-to-many relationship is expected, set `relationship =
##   "many-to-many"` to silence this warning.
```

```r
# (iii) Calculate distances
dn_lq_ca <- dn_lq_ca %>%
  mutate(distance = haversine(
    long1 = longitude.x,
    lat1 = latitude.x,
    long2 = longitude.y,
    lat2 = latitude.y
  ))

# (iv) Find minimum distances
dn_lq_ca_mindist <- dn_lq_ca %>%
  group_by(address.x) %>%
  summarise(closest = min(distance))

# (v) Visualize
ggplot(data = dn_lq_ca_mindist, aes(x = closest)) +
  geom_histogram(binwidth = 15) +
  labs(
    title = "Distribution of closest distances between Denny's and La Quinta in California",
    x = "Distance (km)",
    y = "Frequency"
  )
```

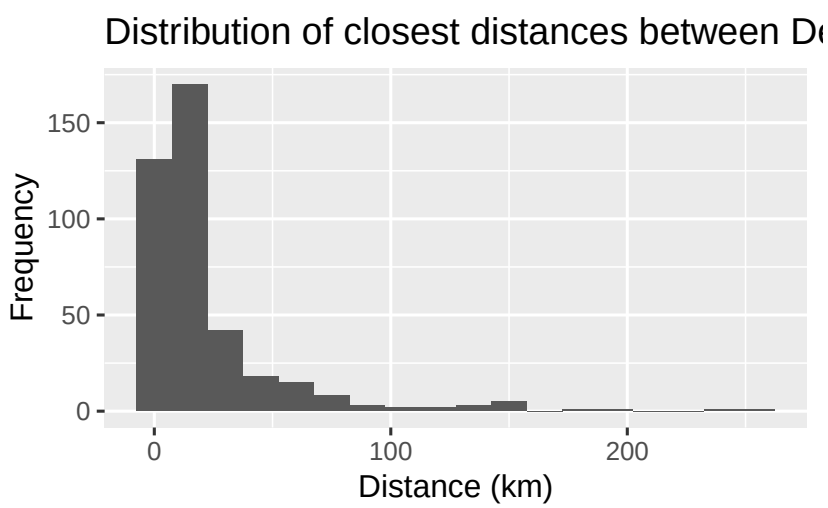


```r
# Summary statistics
dn_lq_ca_mindist %>%
  summarise(
    min = min(closest),
    max = max(closest),
    mean = mean(closest),
    median = median(closest),
```

```
    sd = sd(closest)
  )
```

```
## # A tibble: 1 x 5
##     min   max  mean median    sd
##   <dbl> <dbl> <dbl>  <dbl> <dbl>
## 1 0.016  253.  22.1   11.9  33.0
```

Describe the distribution for your chosen state:

I notice that there is a mean closest distance of 22.1km and median closest distance of 11.9km. The standard deviation of the closest distances between La Quinta and Denny's in California is 33.0. The distribution is noticeably larger than both the Alaska, NC, and TX distributions, which only had 3, 28, and 200 points, respectively. The California distribution has 400 points and is skewed right. The Denny's and La Quinta locations here seem to be a lot further than the locations in Texas and Alaska, but closer than the locations in North Carolina.

Knit, commit with message "Completed Exercise 11", and push your changes.

Exercise 12

Among the states you examined, where is Mitch Hedberg's joke most likely to hold true? Explain your reasoning.

Create a comparison table:

State	Median Distance (km)	Mean Distance (km)	Notes
Alaska	5.20	4.41	Least mean distance, only 3 Denny's locations
North Carolina	53.5	65.4	greatest mean and median distance

State	Median Distance (km)	Mean Distance (km)	Notes
Texas	3.37	5.79	Least median distance, 2nd greatest number of locations out of states chosen
California	11.9	22.1	Greatest number of locations out of states chosen

Your analysis:

Which state has the smallest distances on average? What does this tell us about where the joke holds true?

Alaska has the smallest distances between La Quinta and Denny's on average (using mean). Using this information, this tells us that the joke holds true the most in Alaska, however, there are only 3 Denny's locations in Alaska. Texas, however, is the most meaningful state out of the ones selected for the joke, because it balances having a low mean distance with having 200 Denny's locations.

Knit, commit with message "Completed Exercise 12", and push your changes.

Common Errors and Troubleshooting

Join errors:

- **Too many/too few rows after joining** → When joining on `state` where both datasets have the same state value, you get a Cartesian product (every row paired with every row). This is what we want!

- **Missing .x and .y suffixes** → These are automatically added when both datasets have the same variable names
- **Error: "object not found"** → Make sure you've run all previous code chunks that create the datasets

Distance calculation errors:

- **Error: "could not find function 'haversine'"** → Make sure you ran the code chunk that defines the haversine function
- **Distance values seem wrong** → Check that you're using the correct .x and .y suffixes for coordinates
- **NA values in distance** → Check that there are no missing latitude/longitude values

Group and summarize errors:

- **Error with `group_by()`** → Make sure you're grouping by the Denny's address (with .x suffix)
- **Wrong minimum values** → Make sure you're using `min(distance)` not `min(closest)`

Assignment errors:

- **New variable not saved** → Remember to use `<-` to save the mutated dataset back to the same name
- **Can't find variable in next step** → You forgot the assignment operator in a previous step

General issues:

- **Code chunk not running** → Make sure you changed `eval=FALSE` to `eval=TRUE`
- **Can't knit document** → Check for errors in your code chunks; run them individually to find the problem

---

Key insight: Mitch Hedberg's joke holds true to different degrees in different states! By calculating actual distances, we found that the proximity of Denny's and La Quinta locations varies significantly by state. Some states show very close clustering (supporting the joke), while others show much more spread out locations.

Looking ahead: This type of analysis - filtering, joining, calculating, summarizing, and comparing - is a common pattern in data science. You can apply this same workflow to many different types of questions!

To submit to Canvas:

Step 1. In RStudio, click the **Knit** dropdown menu (next to the Knit button)

Step 2. Select **Knit to tufte_handout** to generate a PDF

Step 3. Download the PDF file from the Files pane

Step 4. Upload the PDF to Canvas

Final Checkpoint: Visit your GitHub repo one more time to confirm all your work is there. We will grade what we see in your repo on GitHub!