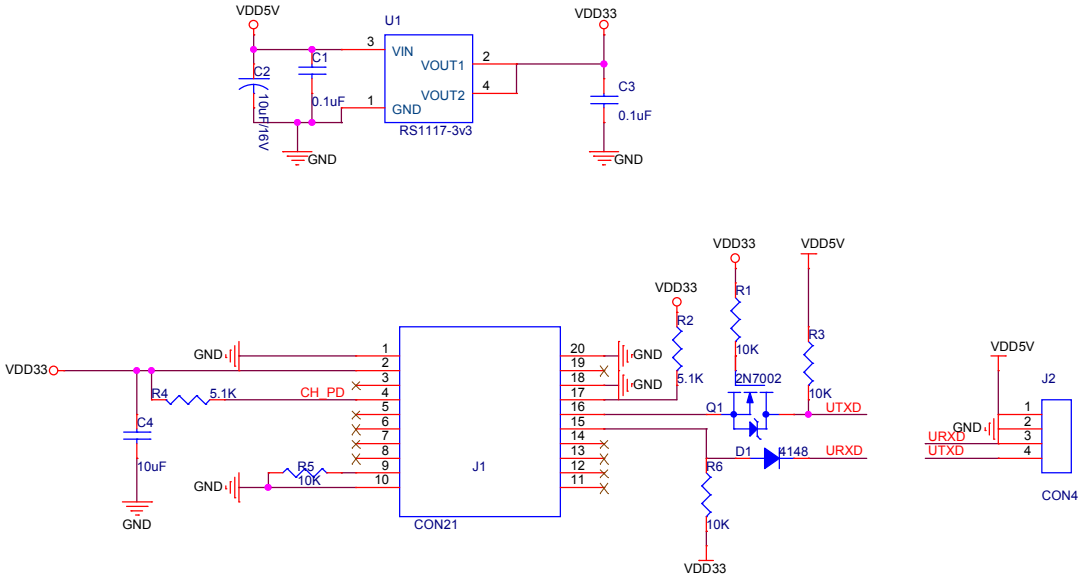

Title	<Title>		
Size B	Document Number <Doc>	<RevCode>	Rev
Date: Saturday, June 04, 2016	Sheet 1 of 1		