ESP32 Adaptive IoT Sampler

FFT-based Adaptive Sampling with Anomaly Detection

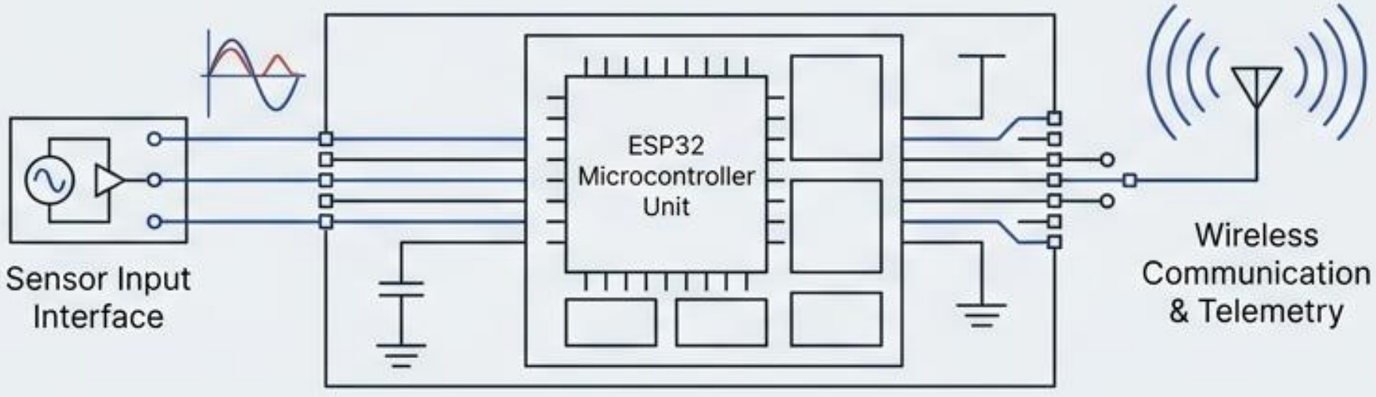

NotebookLM

System Pipeline

1000Hz oversampling -> 9.77Hz adaptive
-> 99% energy saving

> WARNING: Implemented in native C++ simulation on macOS. IoT-Lab hardware validation attempted but failed due to infrastructure fault on testbed (arduino-nano-esp32-1).

NotebookLM

FFT-Driven Adaptive Sampling

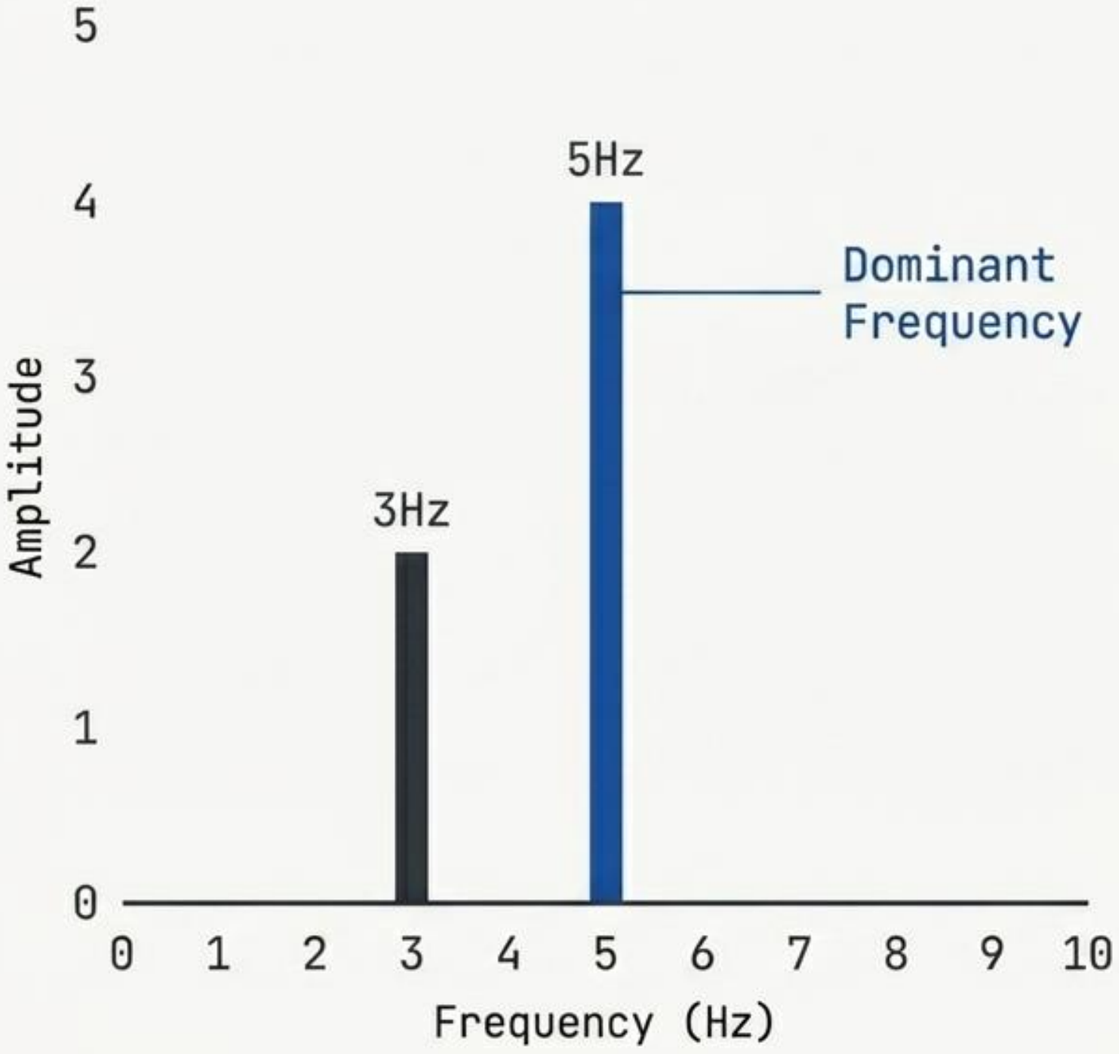

Metric	Oversampled (1000Hz)	Adaptive (9.77Hz)
Samples/window	5000	48
Energy	100%	1%
Data volume	20000B	192B

[SYS_LOG] FFT size 2048 -> 0.49Hz resolution identifies 4.88Hz dominant.

NotebookLM

Key Results

102.4x Sample Reduction	**99.0%** Energy Saving
0.005ms Compute Time	**0.091ms** E2E Latency

* Energy saving is upper bound on sampling energy. Simulated results.

NotebookLM

Adaptive Sampling Across Signal Types

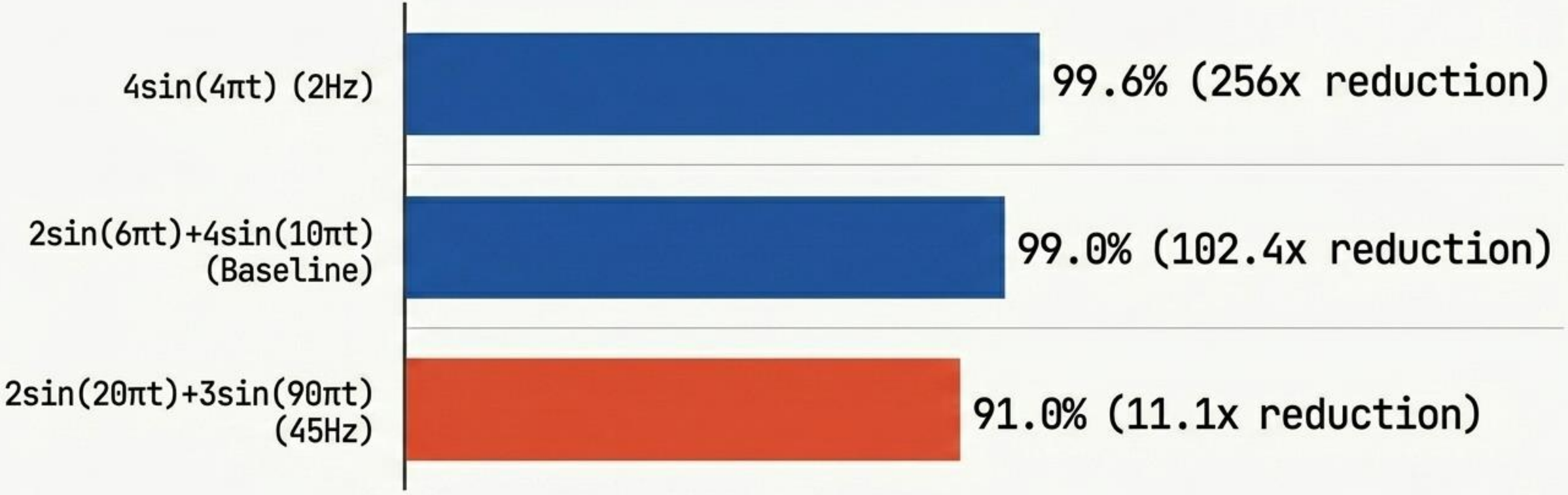

Robust strategy – even worst case (45Hz dominant) saves 91%.

NotebookLM

Z-score vs Hampel Filter

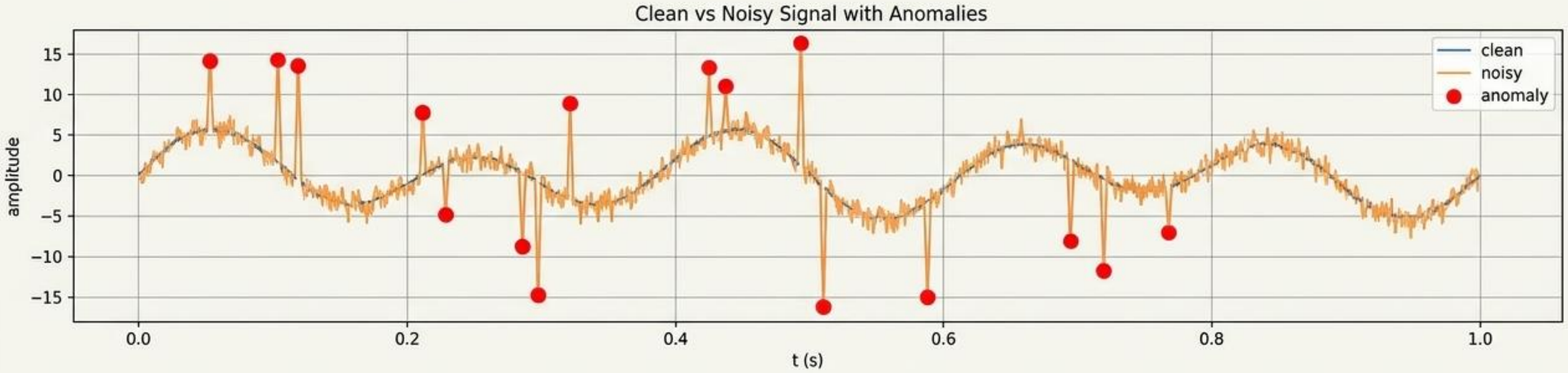

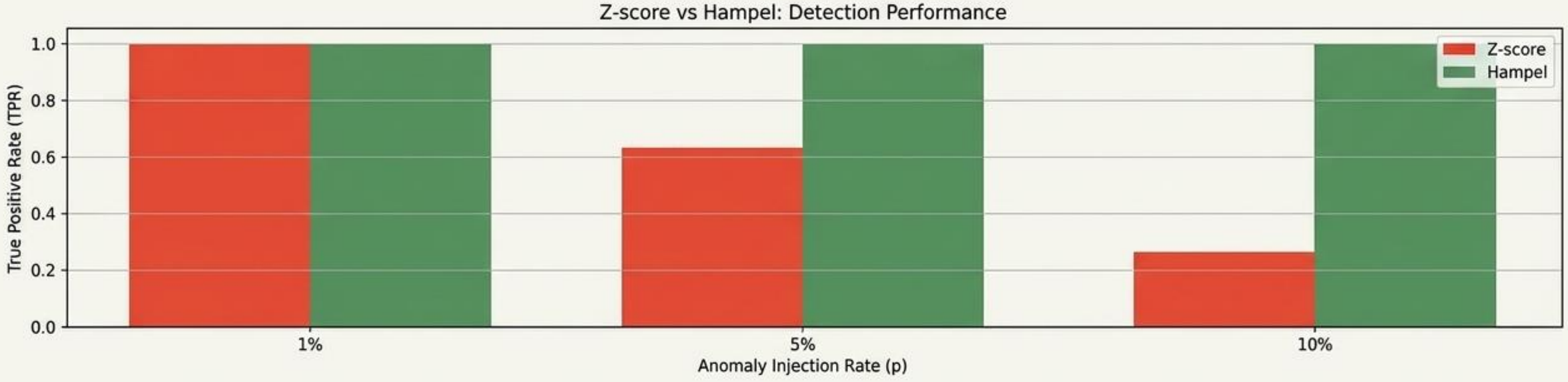

Hampel median is outlier-resistant; Z-score fails at high anomaly rates

NotebookLM

Hardware Validation Attempt — FIT IoT-Lab

```
[  OK  ] SSH and Node Reservation (arduino-nano-esp32-1)
[ FAIL ] Deployment Error (bin/elf/merged binaries)
[ FAIL ] Serial/MQTT Bridge (ConnectionRefusedError 111)
```

> **INFRASTRUCTURE FAULT: Real hardware benchmarking** not possible due to single available node fault.

NotebookLM

LoRaWAN / TTN (Stub)

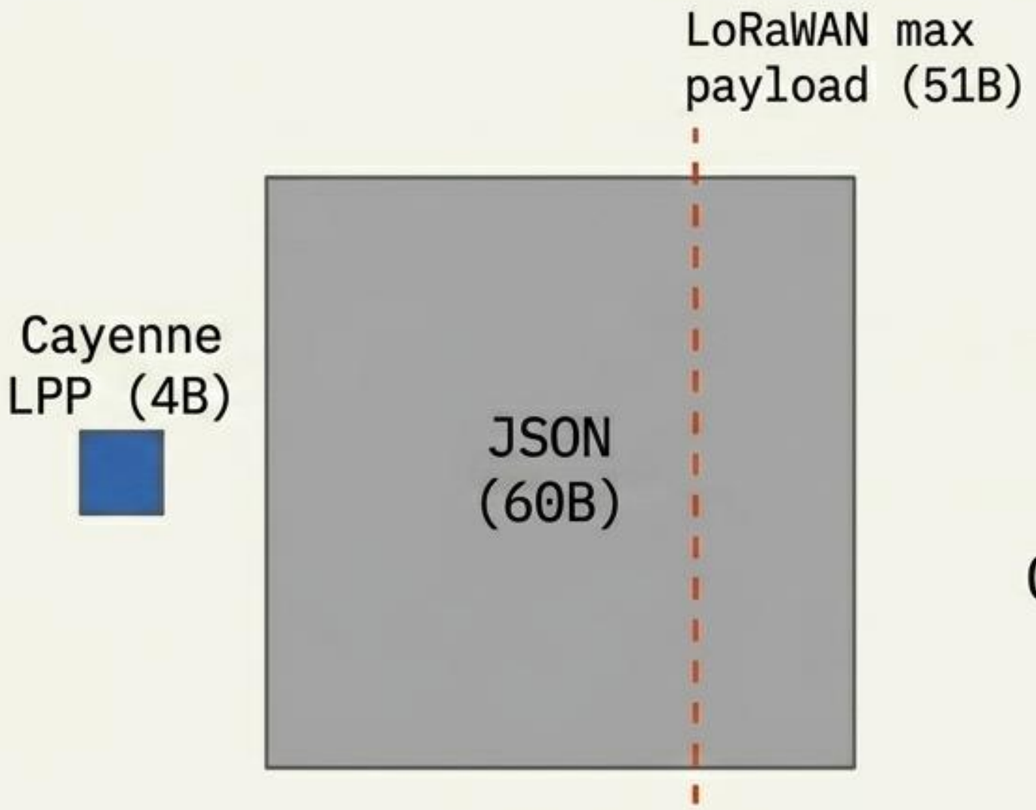

17280 uplinks/day = 346s airtime. TTN fair use limit is 30s/day. 10x over limit - requires window aggregation.

NotebookLM

Conclusions

Takeaways

99% energy saving via FFT adaptive sampling.

Hampel filter robust at all anomaly rates.

LoRaWAN duty cycle constrains transmission rate.

Limitations

- macOS simulation boundary
- Analytical energy/latency estimates replacing physical benchmarking

NotebookLM