SY20018A1

High Efficiency, 1.5MHz, 1A Synchronous Step Down Regulator

General Description

The SY20018A1 is a high efficiency 1.5MHz synchronous step down DC/DC regulator, which is capable of delivering up to 1A output current. It can operate over a wide input voltage range from 2.5V to 5.5V and integrate a main switch and a synchronous switch with very low $R_{DS(ON)}$ to minimize the conduction loss.

The low output voltage ripple, the small external inductor and the capacitor sizes are achieved with 1.5MHz switching frequency.

Ordering Information

SY20018 □(□□)□

- Temperature Code
- Package Code
- Optional Spec Code

Ordering Number	Package type	Note
SY20018A1AAC	SOT23-5	--

Features

- 2.5V to 5.5V Input Voltage Range
- 50μA Low Quiescent Current
- Low $R_{DS(ON)}$ for Internal Switches (Top/Bottom): 260mΩ /160mΩ
- High Switching Frequency 1.5MHz Minimizes the External Components
- Internal Soft-start Limits the Inrush Current
- 100% Dropout Operation
- Reliable Short Circuit Protection
- Without Output Auto Discharge Function
- RoHS Compliant and Halogen Free
- Compact Package: SOT23-5

Applications

- Set Top Box
- USB Dongle
- Media Player
- Smart phone

Typical Applications

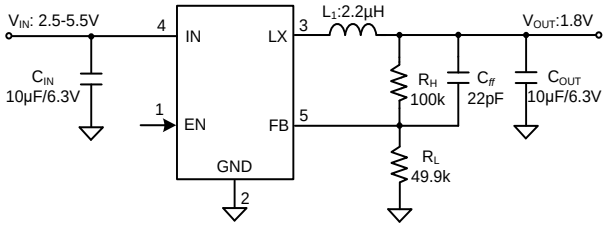

Figure1. Schematic Diagram

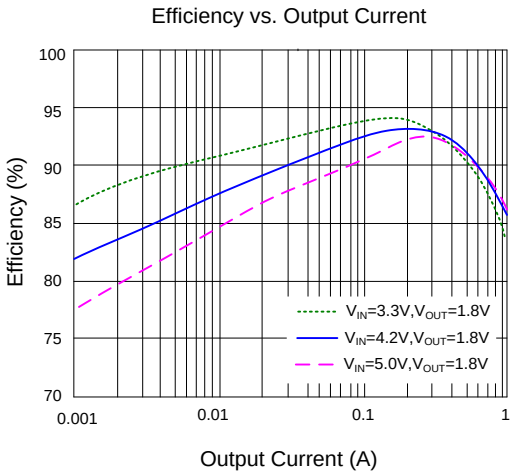

Figure2. Efficiency vs. Output Current

© 2019 Silergy Corp All Rights Reserved.

Pinout (Top View)

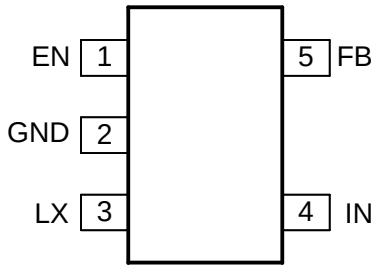

(SOT23-5)

Top Mark: C8xyz (device code: **C8**, ***x=year code, y=week code, z= lot number code)***

Pin Name	Pin Number	Pin Description
EN	1	Enable control. Pull high to turn on. Do not leave it floating.
GND	2	Ground pin.
LX	3	Inductor pin. Connect this pin to the switching node of the inductor.
IN	4	Input pin. Decouple this pin to the GND pin with at least a 10μF ceramic capacitor.
FB	5	Output feedback pin. Connect this pin to the center point of the output resistor divider (as shown in Figure 1) to program the output voltage: $V_{OUT}=0.6\times(1+R_H/R_L)$.

Block Diagram

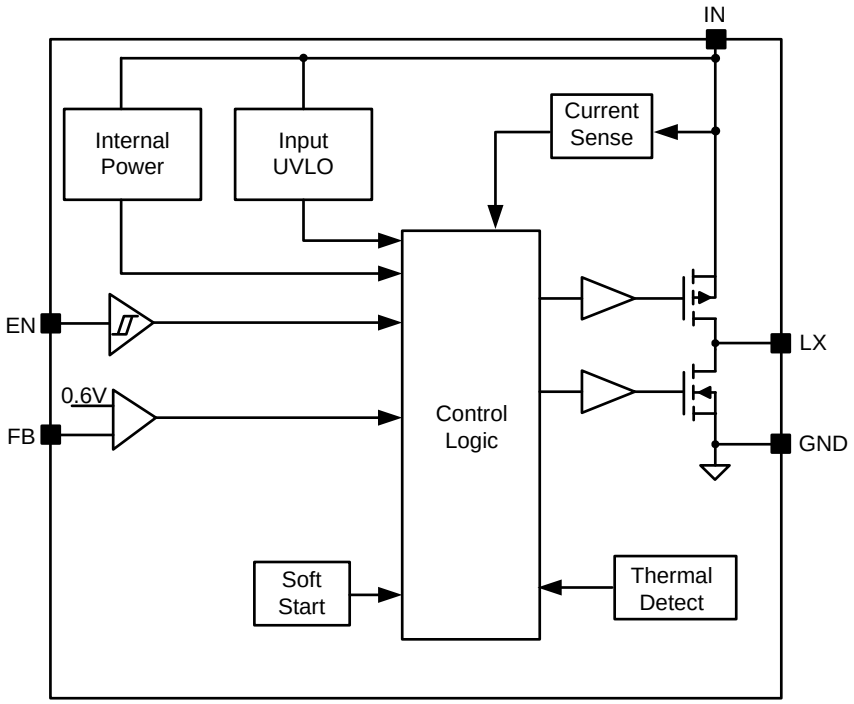

Figure3. Block Diagram

© 2019 Silergy Corp All Rights Reserved.

Absolute Maximum Ratings (Note 1)

Supply Input Voltage---------- 6.0V
EN, FB Voltage---------- V_{IN} + 0.6V
LX Voltage---------- -0.3V(*1) to 6.0V(*2)
Power Dissipation, P_D @ T_A = 25°C ---------- 0.77W
Package Thermal Resistance (Note 2)

θ_{JA} ---------- 130°C/W

θ_{JC} ---------- 28°C/W

Junction Temperature Range ---------- -40°C to 150°C
Lead Temperature (Soldering, 10 sec.) ---------- 260°C
Storage Temperature Range ---------- - -65°C to 150°C
(*1) LX Voltage Tested down to -3V<40ns
(*2) LX Voltage Tested up to +7V<40ns

Recommended Operating Conditions (Note 3)

Supply Input Voltage ---------- 2.5V to 5.5V
Junction Temperature Range ---------- -40°C to 125°C
Ambient Temperature Range ---------- -40°C to 85°C

© 2019 Silergy Corp All Rights Reserved.

Electrical Characteristics

(V_{IN} = 5V, V_{OUT} = 1.8V, L = 2.2μH, C_{OUT} = 10μF, T_A = 25°C, unless otherwise specified)

Parameter	Symbol	Test Conditions	Min	Typ	Max	Unit
Input Voltage Range	V_{IN}		2.5		5.5	V
Input UVLO Threshold	V_{UVLO}				2.5	V
Input UVLO Hysteresis	V_{HYS}			150		mV
Quiescent Current	I_Q	V_{FB}=V_{REF}×105%		50	60	μA
Shutdown Current	I_{SHDN}	V_{EN}=0V		0.1	1	μA
Feedback Reference Voltage	V_{REF}	I_{OUT}=0.5A, CCM	591	600	609	mV
Top FET R_{ON}	$R_{DS(ON)1}$		180	260	340	mΩ
Bottom FET R_{ON}	$R_{DS(ON)2}$		100	160	220	mΩ
EN Input Voltage High	$V_{EN,H}$		1.2			V
EN Input Voltage Low	$V_{EN,L}$				0.4	V
Min ON Time	$t_{ON,MIN}$			60		ns
Maximum Duty Cycle	D_{MAX}		100			%
Turn On Delay	$t_{ON,DLY}$	from EN high to LX start switching		300		μs
Soft-start Time	t_{SS}	V_{OUT} from 0% to 100%		700		μs
Switching Frequency	f_{SW}	I_{OUT}=0.5A, CCM		1.5		MHz
Top FET Current Limit	$I_{LMT,TOP}$		1.5		2.5	A
Thermal Shutdown Temperature	T_{SD}			160		°C
Thermal Shutdown Hysteresis	T_{HYS}			20		°C

Note 1: Stresses beyond the "Absolute Maximum Ratings" may cause permanent damage to the device. These are stress ratings only. Functional operation of the device at these or any other conditions beyond those indicated in the operational sections of the specification is not implied. Exposure to absolute maximum rating conditions for extended periods may affect device reliability.

Note 2: θ_{JA} of SY20018A1 is measured in the natural convection at T_A = 25ºC on a 2OZ two-layer Silergy evaluation board. Pin 3 is the case position for θ_{JC} measurement.

Note 3: The device is not guaranteed to function outside its operating conditions.

© 2019 Silergy Corp All Rights Reserved.

Typical Performance Characteristics

Efficiency vs. Output Current

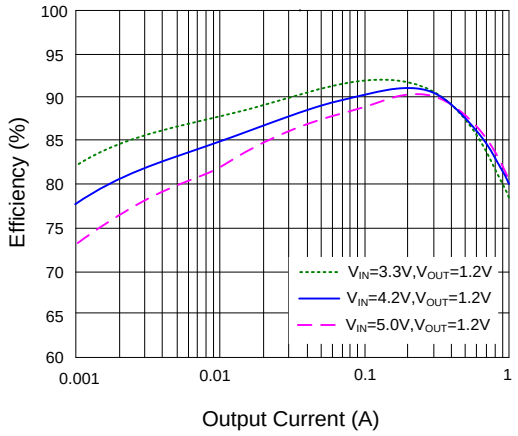

Efficiency vs. Output Current

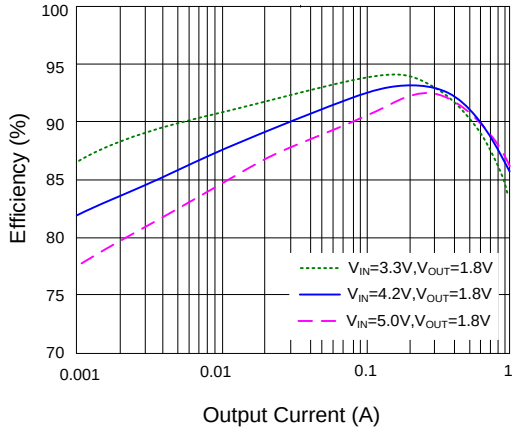

Efficiency vs. Output Current

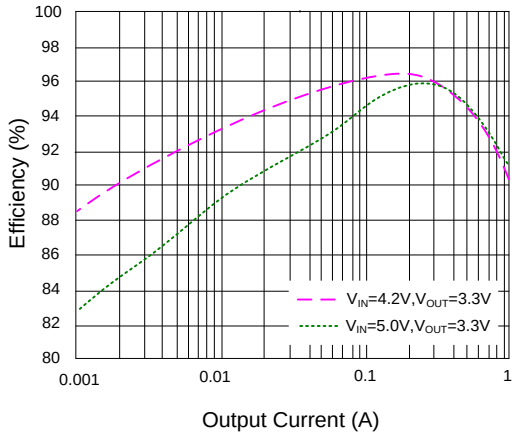

Output Ripple

(V_{IN}=5.0V, V_{OUT}=1.8V, I_{OUT}=0A)

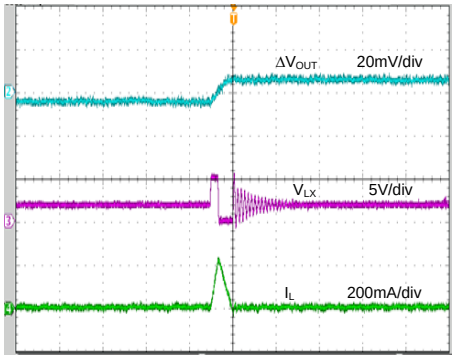

Time (1μs/div)

Output Ripple

(V_{IN}=5.0V, V_{OUT}=1.8V, I_{OUT}=1A)

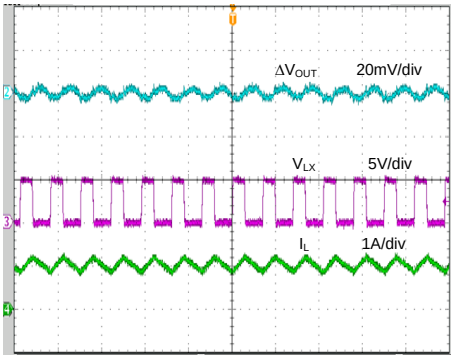

Time (1μs/div)

Startup from Enable

(V_{IN}=5V, V_{OUT}=1.8V, I_{OUT}=1A)

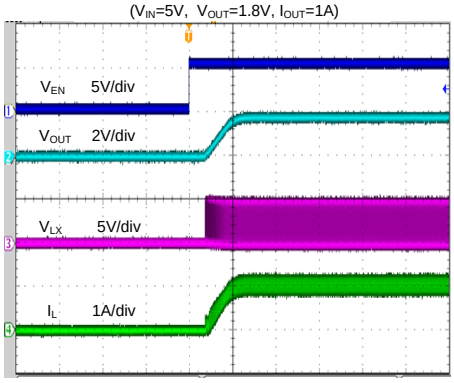

Time (800μs/div)

© 2019 Silergy Corp All Rights Reserved.

Shutdown from Enable

(V_{IN}=5V, V_{OUT}=1.8V, I_{OUT}=1A)

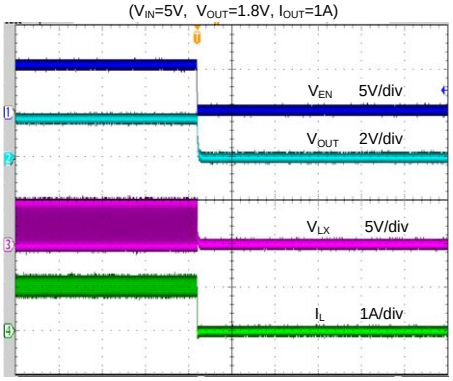

Time (800µs/div)

Load Transient

(V_{IN}=5V, V_{OUT}=1.8V, I_{OUT}=0A to 0.5A)

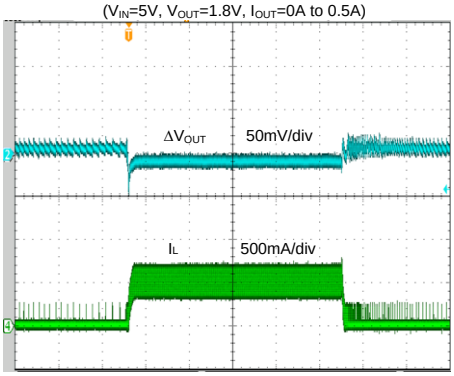

Time (200µs/div)

Load Transient

(V_{IN}=5V, V_{OUT}=1.8V, I_{OUT}=0.1A to 1A)

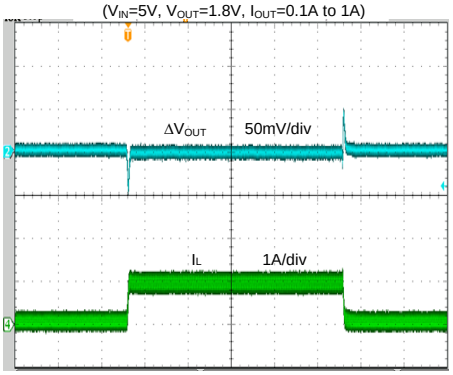

Time (200µs/div)

Short Circuit Protection

(V_{IN}=5V, V_{OUT}=1.8V, I_{OUT}=0A to short to 0A)

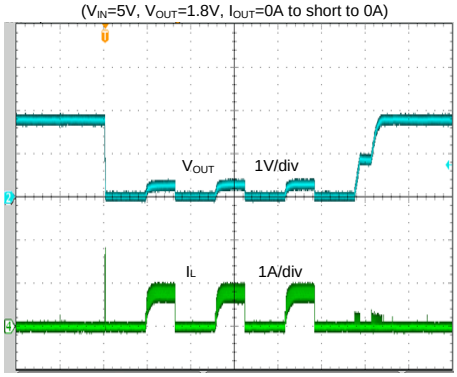

Time (2ms/div)

Short Circuit Protection

(V_{IN}=5V, V_{OUT}=1.8V, I_{OUT}=1A to short to 1A)

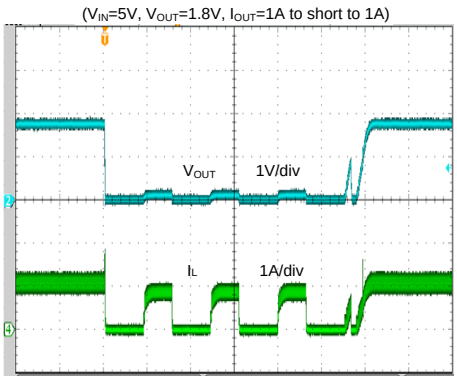

Time (2ms/div)

© 2019 Silergy Corp All Rights Reserved.

Operation

The SY20018A1 is a high efficiency 1.5MHz synchronous step down DC/DC regulator, which is capable of delivering up to 1A output current. It can operate over a wide input voltage range from 2.5V to 5.5V and integrate main switch and synchronous switch with very low $R_{DS\ (ON)}$ to minimize the conduction loss.

The low output voltage ripple, the small external inductor and the capacitor sizes are achieved with 1.5MHz switching frequency.

Applications Information

Because of the high integration in the SY20018A1, the application circuit based on this regulator is rather simple. Only input capacitor C_{IN}, output capacitor C_{OUT}, output inductor L, feedback resistors (R_H and R_L) and feed forward capacitor C_{ff} need to be selected for the targeted applications specifications.

Feedback Resistor Dividers R_H and R_L

Choose R_H and R_L to program the proper output voltage. To minimize the power consumption under light loads, it is desirable to choose large resistance values for both R_H and R_L. A value between 100kΩ and 1MΩ is highly recommended for both resistors. If R_L=100kΩ is chosen, then R_H can be calculated to be:

$$R_H = \frac{(V_{OUT} - 0.6\,V) \times R_L}{0.6V}$$

Input Capacitor C_{IN}

A typical X5R or better grade ceramic capacitor with 6.3V rating and no less than 10µF capacitance is recommended. To minimize the potential noise problem, this ceramic capacitor need to be placed really close to the IN and GND pins. Care should be taken to minimize the loop area formed by C_{IN}, and IN/GND pins.

Output Capacitor C_{OUT}

The output capacitor is selected to handle the output ripple noise requirements. Both steady state ripple and transient requirements must be taken into consideration when selecting this capacitor. For the best performance, it is recommended to use X5R or better grade ceramic capacitor with 6.3V rating and no less than 10µF capacitance.

Output Inductor L

There are several considerations in choosing this inductor.

1) Choose the inductance to provide the desired ripple current. It is suggested to choose the ripple current to be about 40% of the maximum output current. The inductance is calculated as:

$$L = \frac{V_{OUT}(1 - V_{OUT}/V_{IN,MAX})}{F_{SW} \times I_{OUT,MAX} \times 40\%}$$

Where F_{SW} is the switching frequency and $I_{OUT,MAX}$ is the maximum load current.

The SY20018A1 regulator IC is quite tolerant of different ripple current amplitude. Consequently, the final choice of inductance can be slightly off the calculation value without significantly impacting the performance.

2) The saturation current rating of the inductor must be selected to be greater than the peak inductor current under full load conditions.

$$I_{SAT,MIN} > I_{OUT,MAX} + \frac{V_{OUT}(1\text{-}V_{OUT}/V_{IN,MAX})}{2 \cdot F_{SW} \cdot L}$$

3) The DCR of the inductor and the core loss at the switching frequency must be low enough to achieve the desired efficiency requirement. It is desirable to choose an inductor with DCR<50mΩ to achieve a good overall efficiency.

Short Circuit Protection

The SY20018A1 integrates hic-cup mode hard short protection function. If output voltage is below 50% of the regulation voltage, the internal soft-start node and the error amplifier output will be reset immediately. IC works in hic-cup protection mode. The hiccup frequency is about 300Hz, and the hic-cup duty is about 45%. If the hard short condition is removed, IC will go back to normal operation.

Load Transient Considerations

The SY20018A1 regulator integrates the compensation components to achieve good stability and fast transient responses. In some applications, adding a ceramic capacitor (feed-forward capacitor, C_{ff}) in parallel with R_H may further speed up the load transient responses and is thus recommended for applications with large load transient step requirements. Typically, for 1.2V/1.8V/3.3V output, the R_H, R_L, C_{ff} is recommended as below:

Table1. Recommended Component Selection

V_{OUT}	R_H	R_L	C_{ff}
1.2V	49.9k	49.9k	22pF
1.8V	100k	49.9k	22pF
3.3V	100k	22.1k	22pF

Layout Design

The layout design of the SY20018A1 regulator is relatively simple. For the best efficiency and

© 2019 Silergy Corp All Rights Reserved.

minimum noise problems, the following components should be placed close to the IC: C_{IN}, L, R_H and R_L.

1) It is desirable to maximize the PCB copper area connecting to GND pin to achieve the best thermal and noise performance. If the board space allowed, a ground plane is highly recommended.

2) C_{IN} must be close to pins IN and GND. The loop area formed by C_{IN} and GND must be minimized.

3) The PCB copper area associated with LX pin must be minimized to avoid the potential noise problem.

4) The components R_H and R_L, and the trace connected to the FB pin must NOT be adjacent to the LX net on the PCB layout to avoid the noise problem.

5) If the system chip interfacing with the EN pin has a high impedance state at shutdown mode and the IN pin is connected directly to a power source such as a Li-Ion battery, it is desirable to add a pull down 1MΩ resistor between the EN and GND pins to prevent the noise from falsely turning on the regulator at shutdown mode.

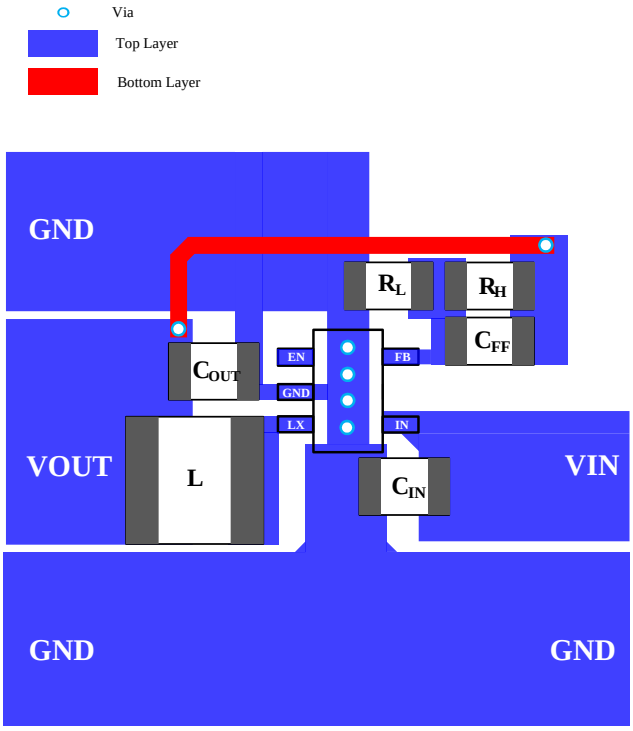

Figure4. PCB Layout Suggestion

© 2019 Silergy Corp All Rights Reserved.

SOT23-5 Package Outline & PCB layout

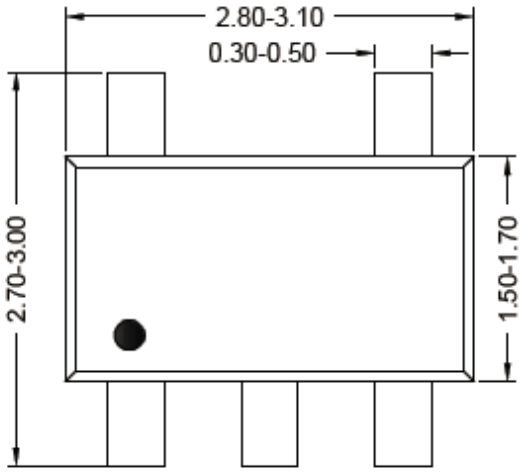

Top view

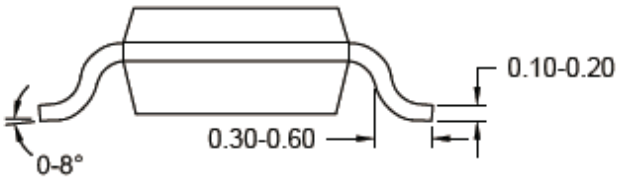

Side view

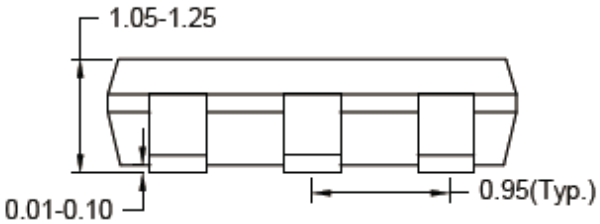

Front view

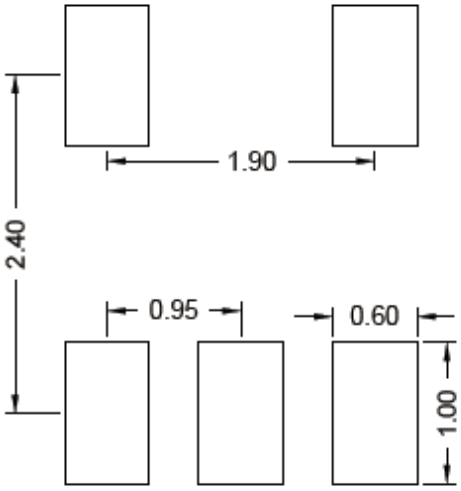

Recommended Pad Layout

Notes: All dimensions in millimeter and exclude mold flash & metal burr.

© 2019 Silergy Corp All Rights Reserved.

Taping & Reel Specification

1. Taping orientation

SOT23-5

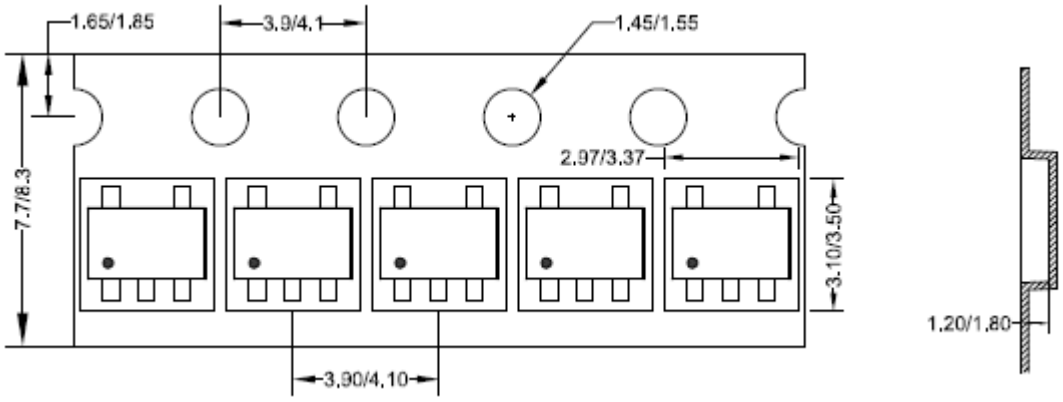

Feeding direction ⟶

2. Carrier Tape & Reel specification for packages

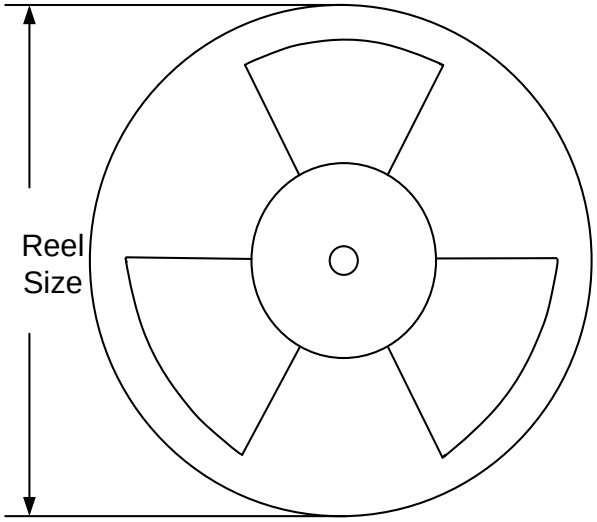

Package type	Tape width (mm)	Pocket pitch(mm)	Reel size (Inch)	Trailer length(mm)	Leader length (mm)	Qty per reel
SOT23-5	8	4	7"	280	160	3000

3. Others: NA

© 2019 Silergy Corp All Rights Reserved.

IMPORTANT NOTICE

1. **Right to make changes.** Silergy and its subsidiaries (hereafter Silergy) reserve the right to change any information published in this document, including but not limited to circuitry, specification and/or product design, manufacturing or descriptions, at any time and without notice. This document supersedes and replaces all information supplied prior to the publication hereof. Buyers should obtain the latest relevant information before placing orders and should verify that such information is current and complete. All semiconductor products are sold subject to Silergy's standard terms and conditions of sale.

2. Applications. Application examples that are described herein for any of these products are for illustrative purposes only. Silergy makes no representation or warranty that such applications will be suitable for the specified use without further testing or modification. Buyers are responsible for the design and operation of their applications and products using Silergy products. Silergy or its subsidiaries assume no liability for any application assistance or designs of customer products. It is customer's sole responsibility to determine whether the Silergy product is suitable and fit for the customer's applications and products planned. To minimize the risks associated with customer's products and applications, customer should provide adequate design and operating safeguards. Customer represents and agrees that it has all the necessary expertise to create and implement safeguards which anticipate dangerous consequences of failures, monitor failures and their consequences, lessen the likelihood of failures that might cause harm and take appropriate remedial actions. Silergy assumes no liability related to any default, damage, costs or problem in the customer's applications or products, or the application or use by customer's third-party buyers. Customer will fully indemnify Silergy, its subsidiaries, and their representatives against any damages arising out of the use of any Silergy components in safety-critical applications. It is also buyers' sole responsibility to warrant and guarantee that any intellectual property rights of a third party are not infringed upon when integrating Silergy products into any application. Silergy assumes no responsibility for any said applications or for any use of any circuitry other than circuitry entirely embodied in a Silergy product.

3. **Limited warranty and liability.** Information furnished by Silergy in this document is believed to be accurate and reliable. However, Silergy makes no representation or warranty, expressed or implied, as to the accuracy or completeness of such information and shall have no liability for the consequences of use of such information. In no event shall Silergy be liable for any indirect, incidental, punitive, special or consequential damages, including but not limited to lost profits, lost savings, business interruption, costs related to the removal or replacement of any products or rework charges, whether or not such damages are based on tort or negligence, warranty, breach of contract or any other legal theory. Notwithstanding any damages that customer might incur for any reason whatsoever, Silergy' aggregate and cumulative liability towards customer for the products described herein shall be limited in accordance with the Standard Terms and Conditions of Sale of Silergy.

4. **Suitability for use.** Customer acknowledges and agrees that it is solely responsible for compliance with all legal, regulatory and safety-related requirements concerning its products, and any use of Silergy components in its applications, notwithstanding any applications-related information or support that may be provided by Silergy. Silergy products are not designed, authorized or warranted to be suitable for use in life support, life-critical or safety-critical systems or equipment, nor in applications where failure or malfunction of an Silergy product can reasonably be expected to result in personal injury, death or severe property or environmental damage. Silergy assumes no liability for inclusion and/or use of Silergy products in such equipment or applications and therefore such inclusion and/or use is at the customer's own risk.

5. **Terms and conditions of commercial sale**. Silergy products are sold subject to the standard terms and conditions of commercial sale, as published at http://www.silergy.com/stdterms, unless otherwise agreed in a valid written individual agreement specifically agreed to in writing by an authorized officer of Silergy. In case an individual agreement is concluded only the terms and conditions of the respective agreement shall apply. Silergy hereby expressly objects to and denies the application of any customer's general terms and conditions with regard to the purchase of Silergy products by the customer.

6. **No offer to sell or license**. Nothing in this document may be interpreted or construed as an offer to sell products that is open for acceptance or the grant, conveyance or implication of any license under any copyrights, patents or other industrial or intellectual property rights. Silergy makes no representation or warranty that any license, either express or implied, is granted under any patent right, copyright, mask work right, or other intellectual property right. Information published by Silergy regarding third-party products or services does not constitute a license to use such products or services or a warranty or endorsement thereof. Use of such information may require a license from a third party under the patents or other intellectual property of the third party, or a license from Silergy under the patents or other intellectual property of Silergy.

For more information, please visit: www.silergy.com

© 2019 Silergy Corp. **All Rights Reserved.**

© 2019 Silergy Corp All Rights Reserved.