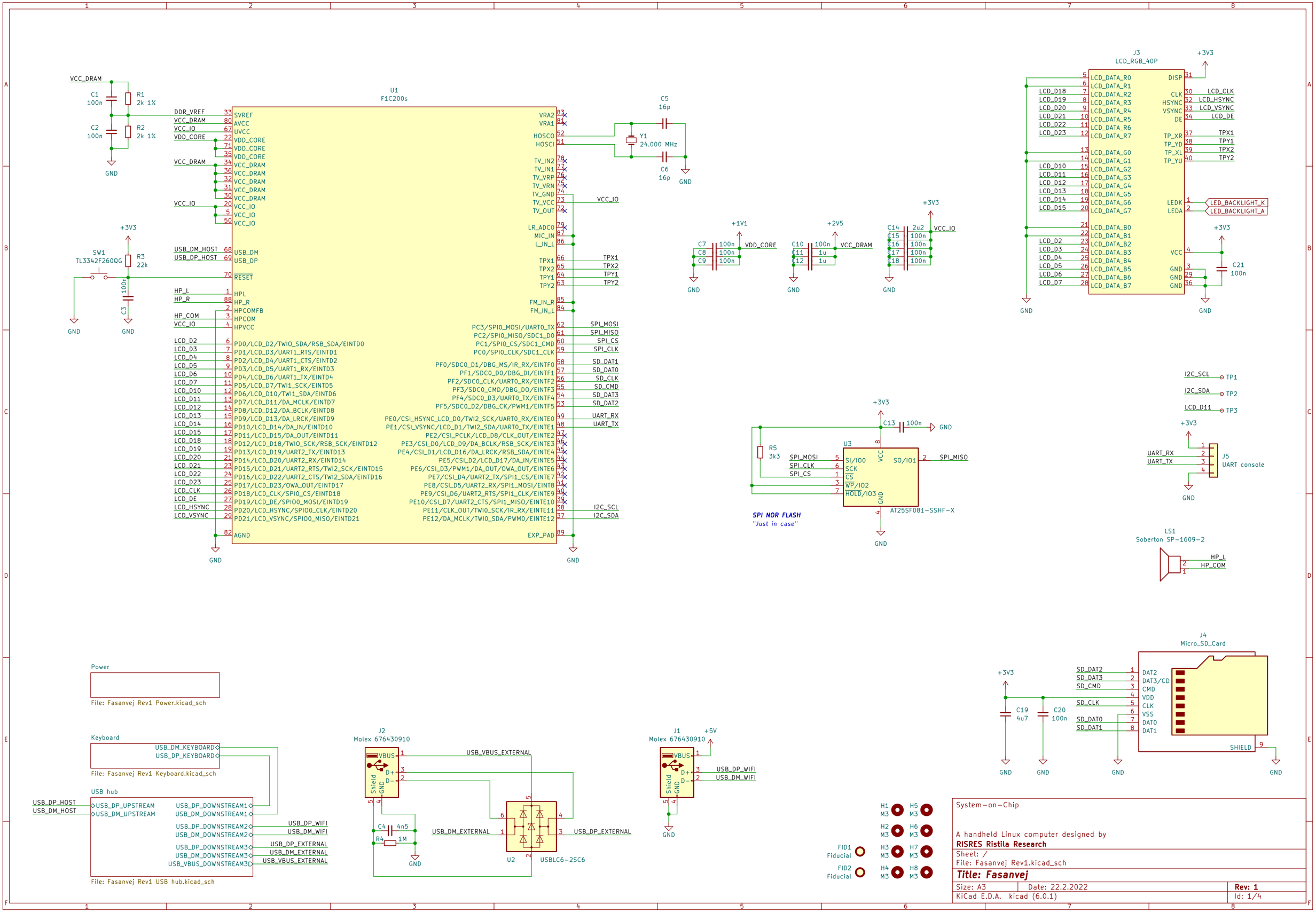
U1
F1C200s
SVREF
AVCC
UVCC
VDD_CORE
VCC_DRAM
VCC_IO
USB_DM
USB_DP
RESET
HPL
HP_R
HPCOMFB
HPCOM
HPVCC
AGND
EXP_PAD
VRA2
VRA1
HOSCO
HOSCI
TV_IN2
TV_IN1
TV_VRP
TV_VRN
TV_GND
TV_VCC
TV_OUT
LR_ADCO
MIC_IN
L_IN_L
FM_IN_R
FM_IN_L
PC3/SPI0_MOSI/UART0_TX
PC2/SPI0_MISO/SDC1_D0
PC1/SPI0_CS/SDC1_CMD
PC0/SPI0_CLK/SDC1_CLK
PF0/SDC0_D1/DBG_MS/IR_RX/EINTF0
PF1/SDC0_D0/DBG_DI/EINTF1
PF2/SDC0_CLK/UART0_RX/EINTF2
PF3/SDC0_CMD/DBG_DO/EINTF3
PF4/SDC0_D3/UART0_TX/EINTF4
PF5/SDC0_D2/DBG_CK/PWM1/EINTF5
PE0/CSI_HSYNC_LCD_D0/TWI2_SCK/UART0_RX/EINTE0
PE1/CSI_VSYNC/LCD_D1/TWI2_SDA/UART0_TX/EINTE1
PE2/CSI_PCLK/LCD_D8/CLK_OUT/EINTE2
PE3/CSI_D0/LCD_D9/DA_BCLK/RSB_SCK/EINTE3
PE4/CSI_D1/LCD_D16/DA_LRCK/RSB_SDA/EINTE4
PE5/CSI_D2/LCD_D17/DA_IN/EINTE5
PE6/CSI_D3/PWM1/DA_OUT/OWA_OUT/EINTE6
PE7/CSI_D4/UART2_TX/SPI1_CS/EINTE7
PE8/CSI_D5/UART2_RX/SPI1_MOSI/EINTE8
PE9/CSI_D6/UART2_RTS/SPI1_CLK/EINTE9
PE10/CSI_D7/UART2_CTS/SPI1_MISO/EINTE10
PE11/CLK_OUT/TWI0_SCK/IR_RX/EINTE11
PE12/DA_MCLK/TWI0_SDA/PWM0/EINTE12
PD0/LCD_D2/TWI0_SDA/RSB_SDA/EINTD0
PD1/LCD_D3/UART1_RTS/EINTD1
PD2/LCD_D4/UART1_CTS/EINTD2
PD3/LCD_D5/UART1_RX/EINTD3
PD4/LCD_D6/UART1_TX/EINTD4
PD5/LCD_D7/TWI1_SCK/EINTD5
PD6/LCD_D10/TWI1_SDA/EINTD6
PD7/LCD_D11/DA_MCLK/EINTD7
PD8/LCD_D12/DA_BCLK/EINTD8
PD9/LCD_D13/DA_LRCK/EINTD9
PD10/LCD_D14/DA_IN/EINTD10
PD11/LCD_D15/DA_OUT/EINTD11
PD12/LCD_D18/TWI0_SCK/RSB_SCK/EINTD12
PD13/LCD_D19/UART2_TX/EINTD13
PD14/LCD_D20/UART2_RX/EINTD14
PD15/LCD_D21/UART2_RTS/TWI2_SCK/EINTD15
PD16/LCD_D22/UART2_CTS/TWI2_SDA/EINTD16
PD17/LCD_D23/OWA_OUT/EINTD17
PD18/LCD_CLK/SPI0_CS/EINTD18
PD19/LCD_DE/SPI00_MOSI/EINTD19
PD20/LCD_HSYNC/SPI00_CLK/EINTD20
PD21/LCD_VSYNC/SPI00_MISO/EINTD21
C1 100n
R1 2k 1%
C2 100n
R2 2k 1%
SW1 TL3342F260QG
R3 22k
C3 100n
C5 16p
C6 16p
Y1 24.000 MHz
C7 100n
C8 100n
C9 100n
C10 100n
C11 1u
C12 1u
C14 2u2
C15 100n
C16 100n
C17 100n
C18 100n
J3
LCD_RGB_40P
DISP
CLK
HSYNC
VSYNC
DE
TP_XR
TP_YD
TP_XL
TP_YU
LEDK
LEDA
VCC
GND
LCD_DATA_R0
LCD_DATA_R1
LCD_DATA_R2
LCD_DATA_R3
LCD_DATA_R4
LCD_DATA_R5
LCD_DATA_R6
LCD_DATA_R7
LCD_DATA_G0
LCD_DATA_G1
LCD_DATA_G2
LCD_DATA_G3
LCD_DATA_G4
LCD_DATA_G5
LCD_DATA_G6
LCD_DATA_G7
LCD_DATA_B0
LCD_DATA_B1
LCD_DATA_B2
LCD_DATA_B3
LCD_DATA_B4
LCD_DATA_B5
LCD_DATA_B6
LCD_DATA_B7
LED_BACKLIGHT_K
LED_BACKLIGHT_A
C21 100n
U3
AT25SF081-SSHF-X
SI/IO0
SCK
CS
WP/IO2
HOLD/IO3
SO/IO1
C13 100n
R5 3k3
SPI NOR FLASH
"Just in case"
J5
UART console
LS1
Soberton SP-1609-2
J4
Micro_SD_Card
DAT2
DAT3/CD
CMD
VDD
CLK
VSS
DAT0
DAT1
SHIELD
C19 4u7
C20 100n
Power
File: Fasanvej Rev1 Power.kicad_sch
Keyboard
USB_DM_KEYBOARD
USB_DP_KEYBOARD
File: Fasanvej Rev1 Keyboard.kicad_sch
USB hub
USB_DP_UPSTREAM
USB_DM_UPSTREAM
USB_DP_DOWNSTREAM1
USB_DM_DOWNSTREAM1
USB_DP_DOWNSTREAM2
USB_DM_DOWNSTREAM2
USB_DP_DOWNSTREAM3
USB_DM_DOWNSTREAM3
USB_VBUS_DOWNSTREAM3
File: Fasanvej Rev1 USB hub.kicad_sch
J2
Molex 676430910
VBUS
D+
D−
Shield
GND
C4 4n5
R4 1M
U2
USBLC6-2SC6
J1
Molex 676430910
+5V
FID1 Fiducial
FID2 Fiducial
H1 M3
H2 M3
H3 M3
H4 M3
H5 M3
H6 M3
H7 M3
H8 M3
System-on-Chip
A handheld Linux computer designed by
RISRES Ristila Research
Sheet: /
File: Fasanvej Rev1.kicad_sch
Title: Fasanvej
Size: A3
Date: 22.2.2022
Rev: 1
KiCad E.D.A. kicad (6.0.1)
Id: 1/4

USB keyboard interface

A handheld Linux computer designed by
RISRES Ristila Research

Sheet: /Keyboard/
File: Fasanvej Rev1 Keyboard.kicad_sch

Title: Fasanvej

Size: A3	Date: 22.2.2022	**Rev: 1**
KiCad E.D.A. kicad (6.0.1)		Id: 2/4

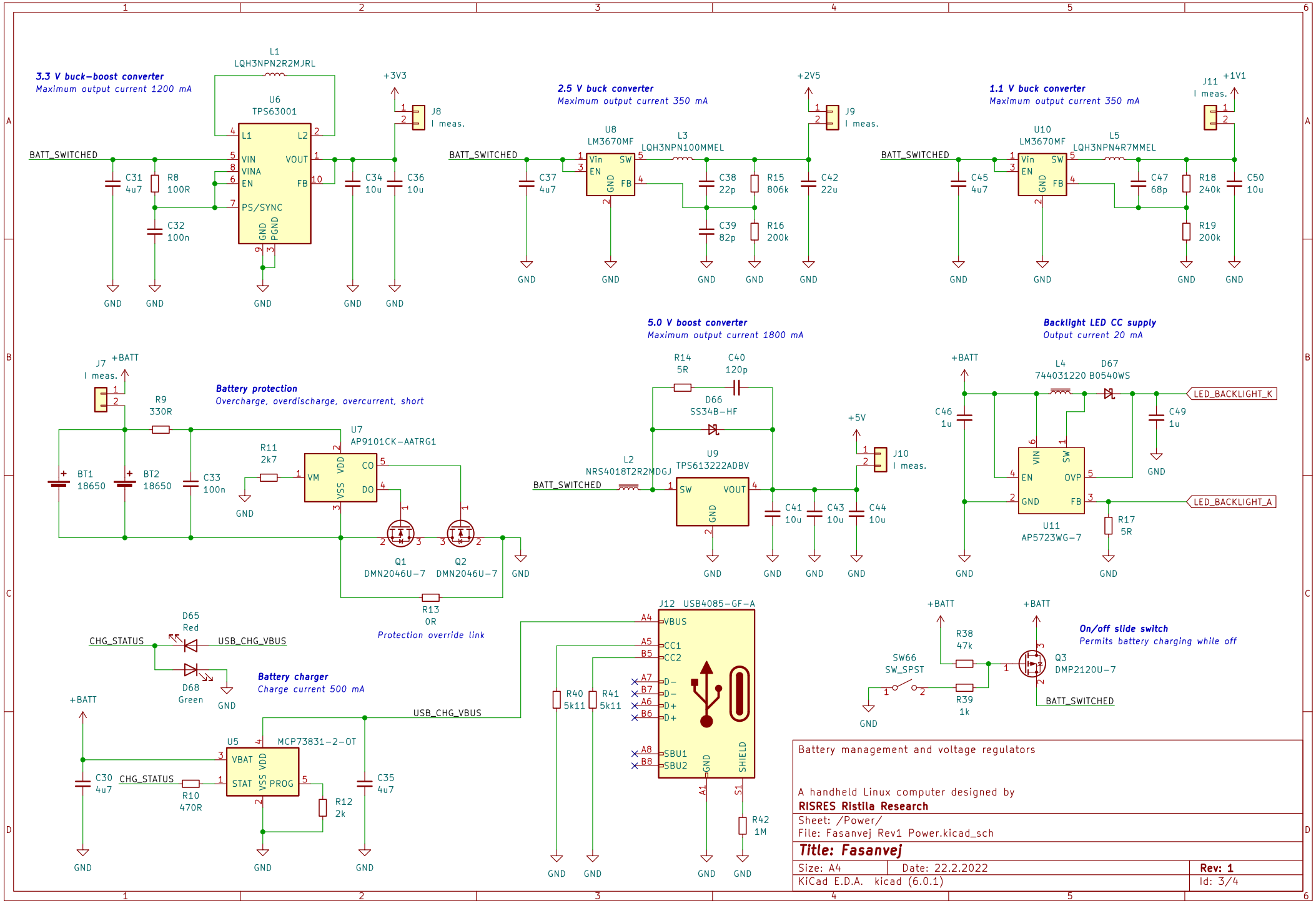
3.3 V buck-boost converter
Maximum output current 1200 mA
L1
LQH3NPN2R2MJRL
U6
TPS63001
+3V3
J8
I meas.
BATT_SWITCHED
C31
4u7
R8
100R
C32
100n
C34
10u
C36
10u
2.5 V buck converter
Maximum output current 350 mA
U8
LM3670MF
L3
LQH3NPN100MMEL
+2V5
J9
I meas.
C37
4u7
C38
22p
C39
82p
R15
806k
R16
200k
C42
22u
1.1 V buck converter
Maximum output current 350 mA
U10
LM3670MF
L5
LQH3NPN4R7MMEL
J11
I meas.
+1V1
C45
4u7
C47
68p
R18
240k
R19
200k
C50
10u
GND
Battery protection
Overcharge, overdischarge, overcurrent, short
J7
I meas.
+BATT
R9
330R
BT1
18650
BT2
18650
C33
100n
R11
2k7
U7
AP9101CK-AATRG1
Q1
DMN2046U-7
Q2
DMN2046U-7
R13
0R
Protection override link
5.0 V boost converter
Maximum output current 1800 mA
R14
5R
C40
120p
D66
SS34B-HF
L2
NRS4018T2R2MDGJ
U9
TPS613222ADBV
+5V
J10
I meas.
C41
10u
C43
10u
C44
10u
Backlight LED CC supply
Output current 20 mA
L4
744031220
D67
B0540WS
LED_BACKLIGHT_K
LED_BACKLIGHT_A
C46
1u
C49
1u
U11
AP5723WG-7
R17
5R
D65
Red
D68
Green
CHG_STATUS
USB_CHG_VBUS
Battery charger
Charge current 500 mA
U5
MCP73831-2-OT
C30
4u7
R10
470R
R12
2k
C35
4u7
J12
USB4085-GF-A
R40
5k11
R41
5k11
R42
1M
On/off slide switch
Permits battery charging while off
SW66
SW_SPST
R38
47k
R39
1k
Q3
DMP2120U-7
Battery management and voltage regulators
A handheld Linux computer designed by
RISRES Ristila Research
Sheet: /Power/
File: Fasanvej Rev1 Power.kicad_sch
Title: Fasanvej
Size: A4
Date: 22.2.2022
Rev: 1
KiCad E.D.A. kicad (6.0.1)
Id: 3/4

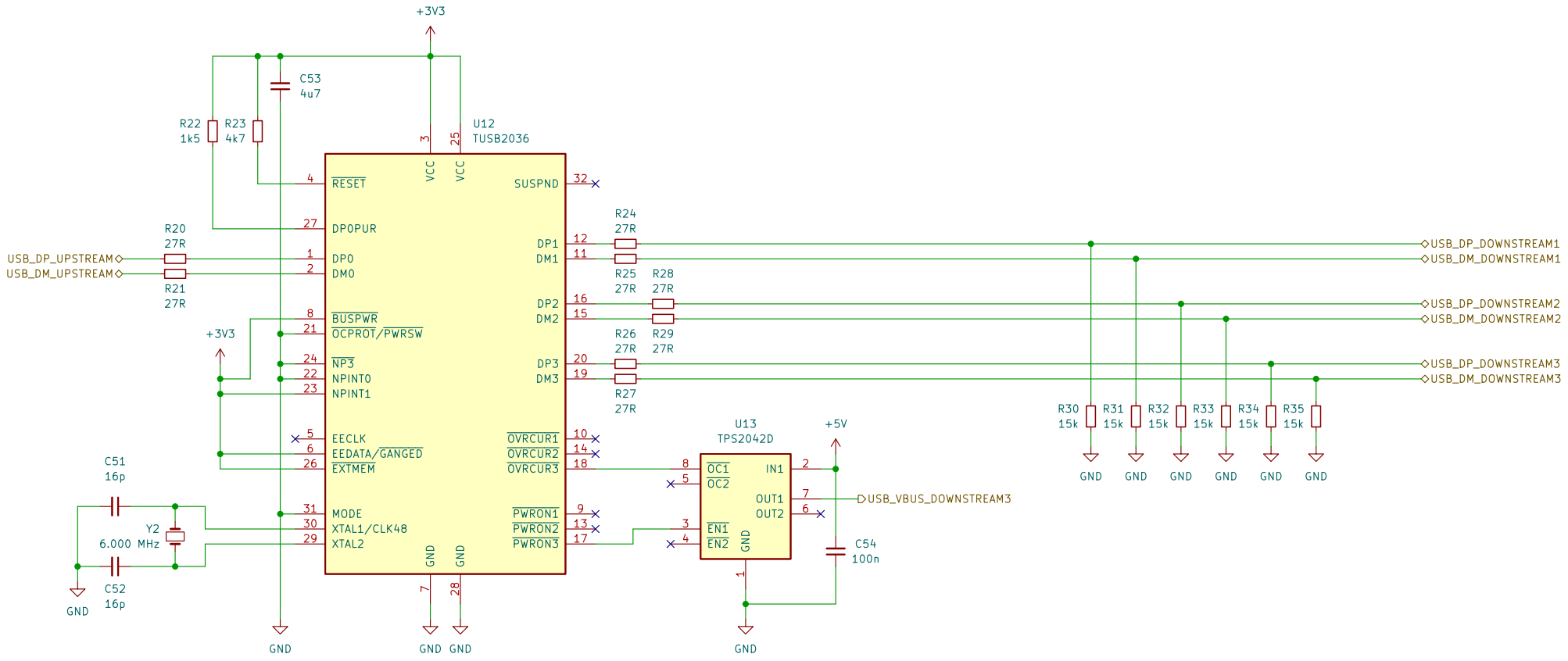

USB hub

A handheld Linux computer designed by
RISRES Ristila Research

Sheet: /USB hub/
File: Fasanvej Rev1 USB hub.kicad_sch

Title: Fasanvej

Size: A4	Date: 22.2.2022	**Rev: 1**
KiCad E.D.A. kicad (6.0.1)		Id: 4/4