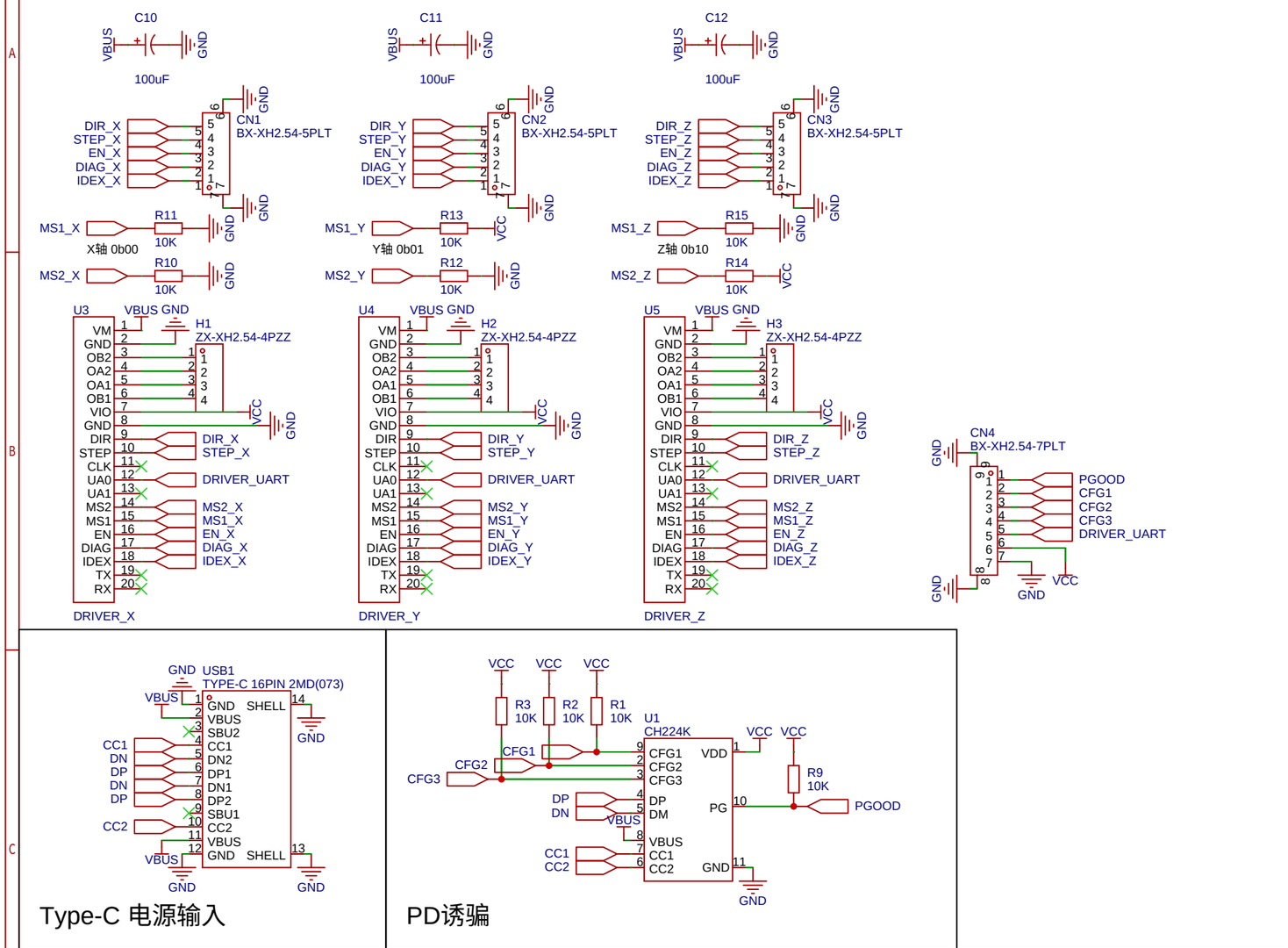

Type-C 电源输入

PD诱骗

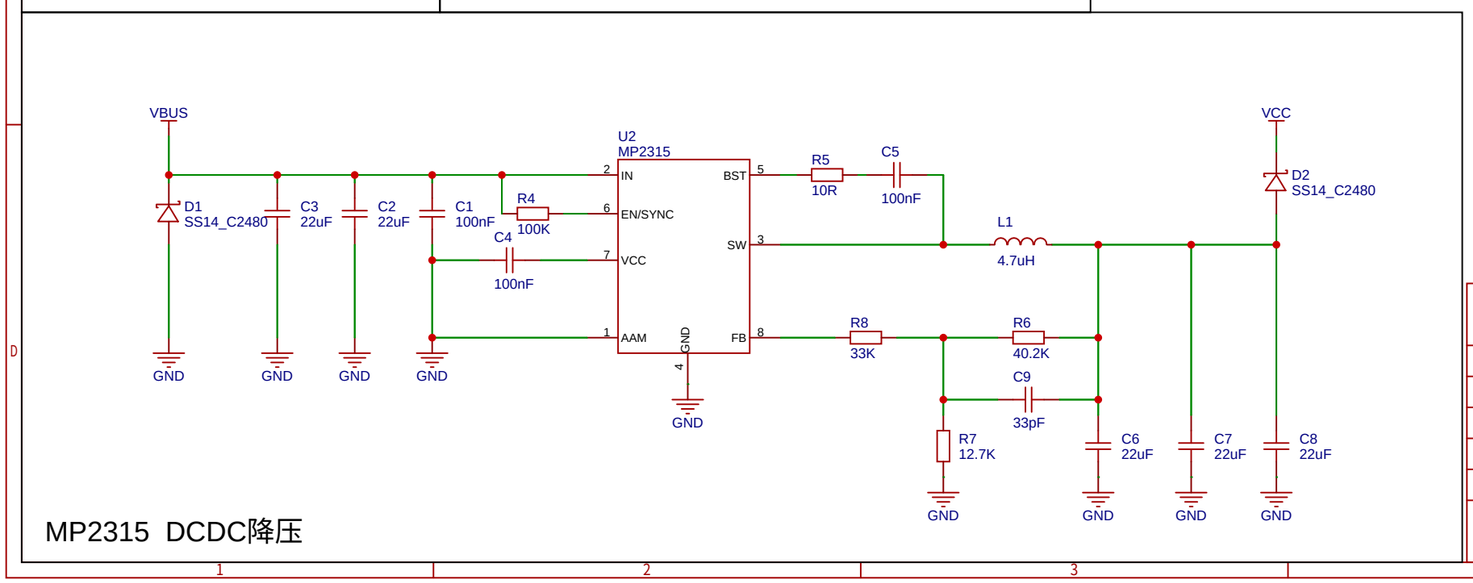

MP2315 DCDC降压

Schematic	Sch_Motor_Power	Update Date	2023-11-25
		Create Date	2023-06-16
Page	P1	Part Number	
Drawed	Project Hole Puncher NG		
Reviewed			
	VER	SIZE	PAGE 1 OF 1
嘉立创EDA	V1.0	A4	mr_258876