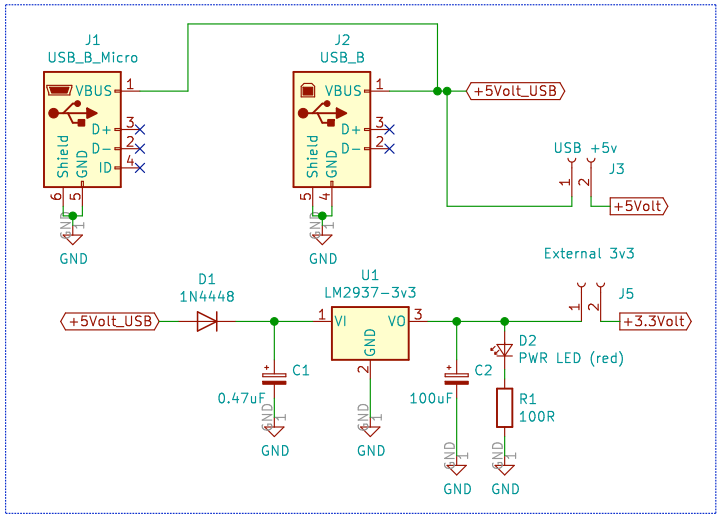

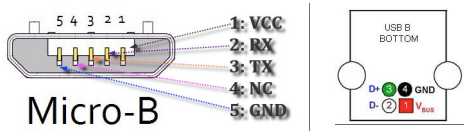

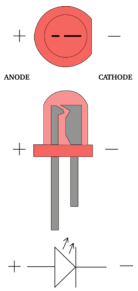

SOT-223 (DCY) Package
3 Pins
Front View

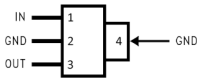

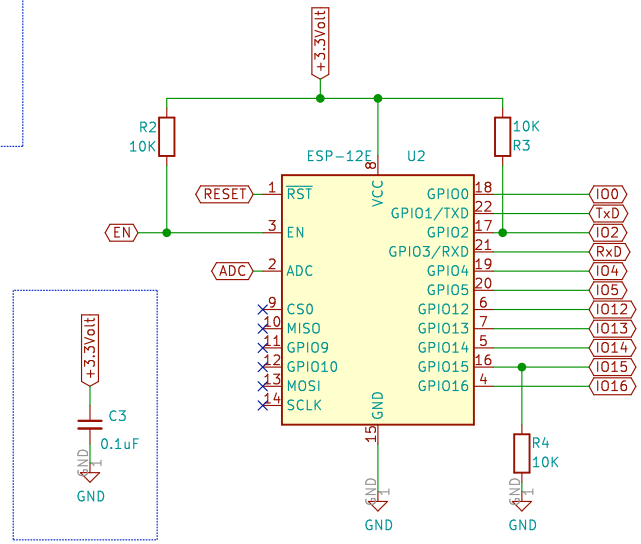

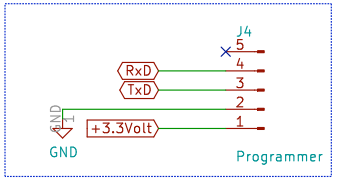

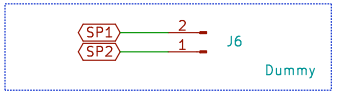

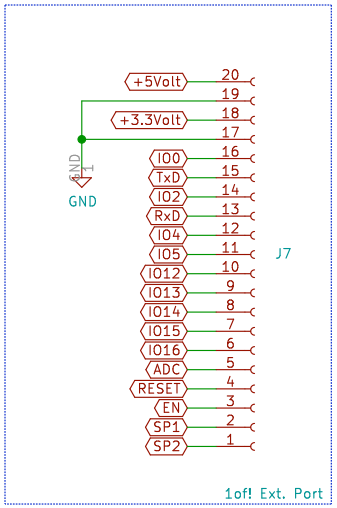

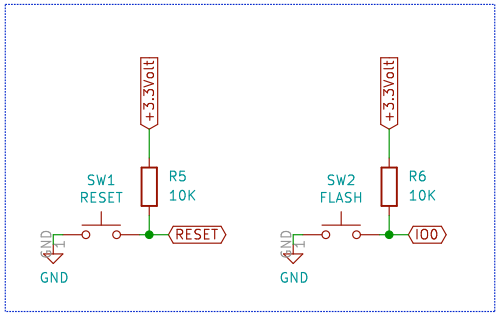

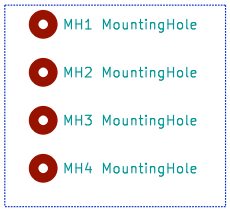

Mode	GPIO15	GPIO0	GPIO2
UART	Low	Low	High
Flash Boot	Low	High	High

1of!-ESP12
1of!-Platform for designing ESP8266 devices

(c) Willem Aandewiel

Sheet: /
File: 1of!-ESP12.sch

Title: 1of!-ESP12 (USB)

Size: A4	Date: 2019-07-05	**Rev: 2.0**
KiCad E.D.A. kicad (5.0.0-3-g5ebb6b6)		Id: 1/1