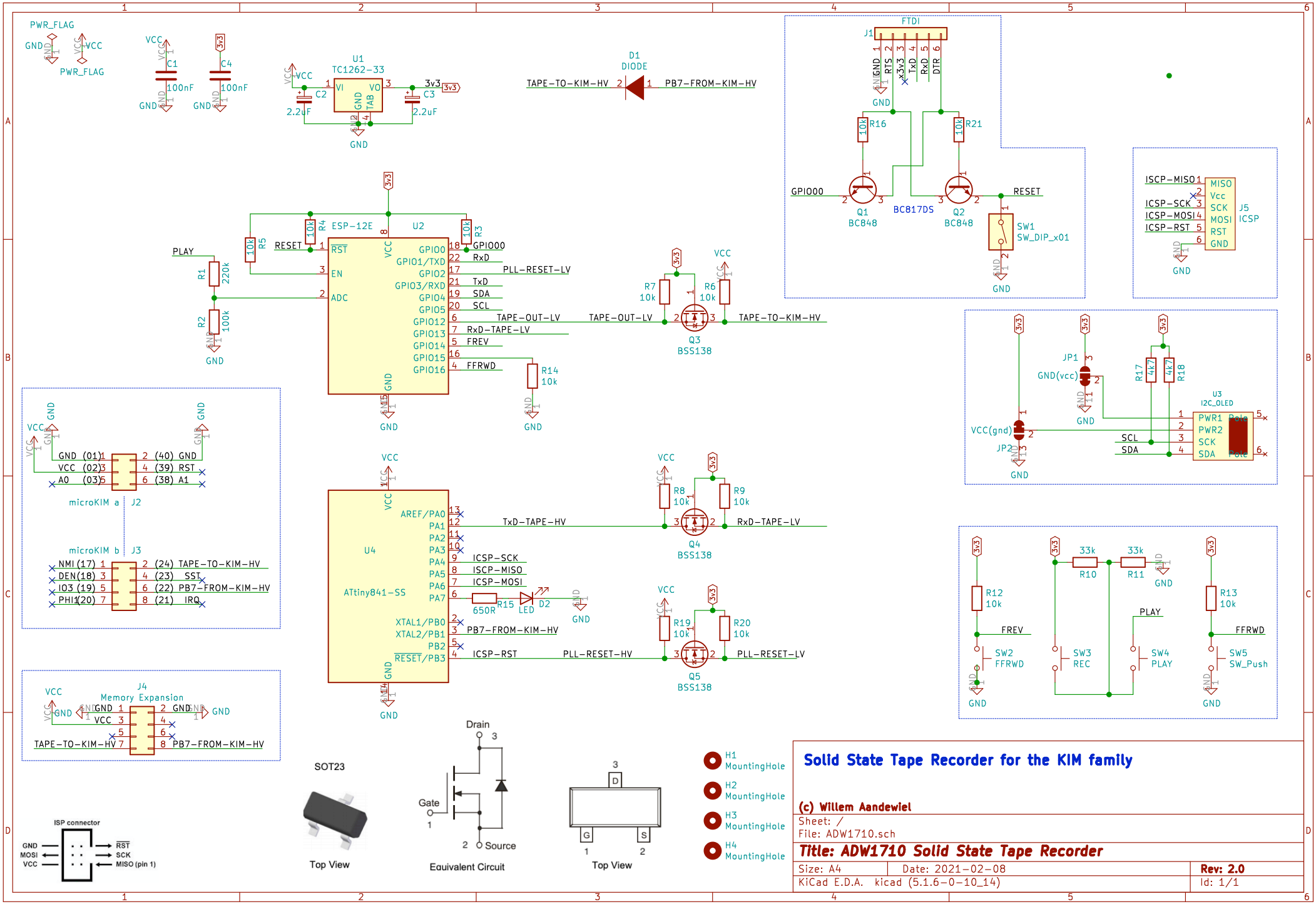

Solid State Tape Recorder for the KIM family

(c) Willem Aandewiel

Sheet: /
File: ADW1710.sch

Title: ADW1710 Solid State Tape Recorder

Size: A4	Date: 2021-02-08	**Rev: 2.0**
KiCad E.D.A. kicad (5.1.6-0-10_14)		Id: 1/1