Poster Abstract: TV White Space Emergency Communication System for Low-Coverage National Parks

Vadim Allayev*
Computer Science, CUNY Queens College, Flushing, NY
vadim.allayev94@qmail.cuny.edu

Andrew Martin*
Computer Science, CUNY Queens College, Flushing, NY
andrew.martin72@qmail.cuny.edu

Mahbubur Rahman
Computer Science, CUNY Queens College, Flushing, NY
mdmahbubur.rahman@qc.cuny.edu

ABSTRACT

In remote areas such as national parks, cellular networks are often unavailable. This can be dangerous for a hiker in the case of an emergency. Existing technologies including SARSAT's 406 MHz Emergency Distress Beacons work via satellite, but are limited to one-way communication. By utilizing TV white space, we can create a flexible and versatile emergency communication system that employs two-way communication, with both emergency signaling and convenience features such as messaging and alerts.

CCS CONCEPTS

• **Networks → Network architectures; Wireless local area networks**.

KEYWORDS

TV white space, emergency communication systems, wireless sensor networks, low-power wide-are networks, search and rescue, rural connectivity

ACM Reference Format:
Vadim Allayev, Andrew Martin, and Mahbubur Rahman. 2025. Poster Abstract: TV White Space Emergency Communication System for Low-Coverage National Parks. In *Proceedings of California (SenSys '25).* ACM, New York, NY, USA, 2 pages. https://doi.org/XXXXXXX.XXXXXXX

1 INTRODUCTION

Thousands of Search and Rescue (SAR) operations take place every year across national parks [7]. The need for timely communication is crucial for hiker safety. This can extend to natural disasters and timely responses. While emergency communications devices do exist and are commonly used, i.e., SARSAT 406 MHz Emergency Distress Beacons, they send distress signals via satellite, which only permits one-way communication [3].

This paper proposes an emergency communication system that utilizes TV white space (TVWS) technology to provide two-way communication, real-time updates, and convenience features in remote areas like national parks. TVWS are unused TV frequencies (e.g., 54–698 MHz in the US), offering excellent long-range propagation and obstacle penetration [4]. In 2013, Microsoft deployed a cost-effective emergency TVWS network in the Philippines after typhoon devastation at a tenth of the cost of other viable options, demonstrating the benefits and feasibility of TVWS [2].

We leverage TVWS to enable two-way communication between individuals and rescue teams, allowing teams to gather situational information and provide immediate assistance. In addition to emergency support, our system includes non-urgent features such as location sharing, messaging, environment monitoring (weather, air quality, wildlife activity), and safety check-ins—enhancements not offered by traditional emergency beacons but crucial for improving safety and user experience in remote areas.

Our approach includes base stations (similar to LoRaWAN) within national parks and equips each hiker with a portable beacon utilizing TVWS for both emergency and general communication. In an emergency, the beacon transmits a distress signal to the base stations that relays it to the park's central control center and SAR authorities if needed. Our system employs a hybrid localization method, using GPS in open spaces and TVWS-based triangulation in areas with obstructions like trees or mountains. Utilizing signals from multiple base stations ensures accurate location tracking across diverse terrains, enabling effective and reliable communication with emergency responders [8].

TVWS is particularly useful as a point-to-multipoint backhaul technology [6]. Thus, to ensure reliable data transmission, our system incorporates a backhaul infrastructure for our base stations to bridge the gap between the TVWS network and the Internet. Energy efficiency is another critical aspect to consider since users may be in the national park for a long duration of time. TVWS is shown to be 9-12 times more efficient than LTE networks [1].

2 SYSTEM MODEL

The system consists of three primary components: beacon devices, base stations, and the backhaul link (refer to Figure 1).

The beacons, carried by the hikers, enable both emergency communication and non-critical messaging. They utilize our hybrid localization feature, combining GPS for open spaces and triangulation through base station signals for obstructed areas. To conserve battery life, beacons use an energy-saving "sleep" mode when inactive. Moreover, they would leverage LPWAN (Low-Power Wide-Area Network) protocols, designed for long-range connectivity with low power consumption.

The base stations are strategically placed in key locations around the national parks to provide maximum coverage. We propose a VSAT (satellite-based communication system connecting a local network to a core network) backhaul system, a cost-effective way

*Co-primary authors.

Permission to make digital or hard copies of all or part of this work for personal or classroom use is granted without fee provided that copies are not made or distributed for profit or commercial advantage and that copies bear this notice and the full citation on the first page. Copyrights for components of this work owned by others than the author(s) must be honored. Abstracting with credit is permitted. To copy otherwise, or republish, to post on servers or to redistribute to lists, requires prior specific permission and/or a fee. Request permissions from permissions@acm.org.
SenSys '25, 978-1-4503-XXXX-X/2018/06
© 2025 Copyright held by the owner/author(s). Publication rights licensed to ACM.
ACM ISBN 978-x-xxxx-xxxx-x/YY/MM
https://doi.org/XXXXXXX.XXXXXXX

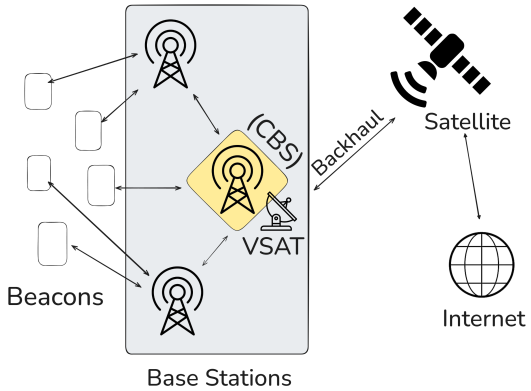

Figure 1: System Architecture and Communication Flow

to provide cellular-like services in areas without traditional infrastructure. Since not all base stations may have a reliable Internet connection, we specify a central base station (CBS), likely to be a park main office, which uses a dedicated backhaul VSAT to get Internet access. The other base stations relay beacon data to the CBS via single- or multi-hops. Base stations can also perform spectrum sensing to query spectrum databases and connect to TVWS channels even without an Internet connection. For TVWS channel allocation, assignment, and multi-gateway management, we adopt the protocols proposed in SNOW [5].

Our proposed network may operate in two modes, an infrastructure and an infrastructure-less (ad-hoc) multi-hop mode. In infrastructure mode, the CBS acts as a proxy to the Internet in order for a beacon to communicate with emergency services (sometimes the signal would need multiple hops to reach the CBS). The infrastructure-less mode is for non-emergency beacon communications with other beacons, such as messaging, or a main device broadcasting alerts or notifications throughout the system.

3 HARDWARE IMPLEMENTATION GOALS

Beacons will be equipped with rechargeable batteries, a durable, weather-resistant case, and have a small form factor. They may use CC13x0 microcontrollers that require low cost and low power consumption. Moreover, we would integrate SNOW module to accommodate long-range communication and GPS modules to provide location data. Each base station would be equipped with an 11 dBi Yagi antenna to receive and transmit TVWS radio signals and a Universal Software Radio Peripheral radio as the radio transceiver to handle signal processing. Base stations would rely on solar panels for energy and have backup batteries.

4 SIMULATION AND EVALUATION

To test our system, we simulated a network in Python using SimPy to model communication between beacons, relay base stations, and a CBS. Visualizations were generated with Matplotlib and NetworkX, while NumPy handled channel data, spatial relations, and random variables like noise and delays. Base stations have a 14km range in accordance with prior works [6].

To best visualize our system objectives, we created models to show the delay of beacons using TVWS in a remote area to demonstrate the effectiveness of our proposed emergency communication system. The plot of delays over time shows the latency experienced by beacons when transmitting signals to the nearest base stations and the CBS. Beacons communicate first with the closest base stations, which then relay the message to the CBS. If a beacon is close enough to the CBS, it would communicate with it directly.

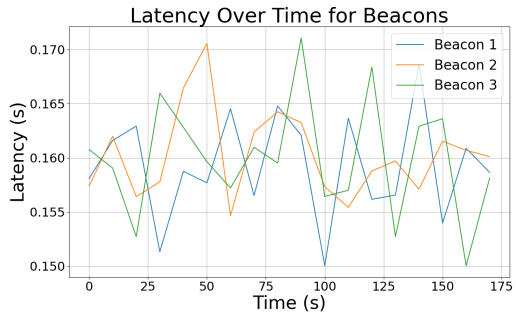

Figure 2: Signal Latency

The delay calculation considers signal propagation time, processing time at the CBS, and potential delays due to handling noise in the environment. We can observe a minimal latency time of 0.175s or less under relatively ideal conditions. This showcases well the feasibility of using TVWS for two-way communication in emergency situations.

5 CONCLUSION

This paper presents a TVWS emergency communication systems for low-coverage areas, like national parks. This system provides two-way communication and takes advantage of the longer communication range of TVWS. It provides convenience features for hikers to communicate with other hikers or national park services for varying situations (e.g., messaging, alerts, etc.). With further optimization and real-world testing, this system could offer a robust and reliable alternative to the existing 406 MHz emergency beacons.

REFERENCES

[1] Rodney Martinez Alonso, David Plets, Margot Deruyck, Luc Martens, Glauco Guillen, and Wout Joseph. 2017. TV White Space and LTE Network Optimization Toward Energy Efficiency in Suburban and Rural Scenarios. *IEEE Transactions on Broadcasting* PP (08 2017), 1–8.

[2] Microsoft. 2010. TVWS in Disaster Response: A Breakthrough Technology for Rapid Communications after Typhoon Haiyan in the Philippines.

[3] National Oceanic and Atmospheric Administration. [n. d.]. 406MHz Emergency Distress Beacons. https://www.sarsat.noaa.gov/emergency-406-beacons/

[4] Mahbubur Rahman and Abusayeed Saifullah. 2019. A comprehensive survey on networking over TV white spaces. *Pervasive and Mobile Computing* 59 (2019).

[5] Mahbubur Rahman and Abusayeed Saifullah. 2020. Integrating Low-Power Wide-Area Networks for Enhanced Scalability and Extended Coverage. *IEEE/ACM Transactions on Networking* 28, 1 (2020), 413–426.

[6] Sidney Roberts, Paul Garnett, and Ranveer Chandra. 2015. Connecting africa using the TV white spaces: from research to real world deployments. In *LANMAN'15*.

[7] Congressional Research Service. 2024. Search and Rescue (SAR) Operations on Federal Lands. https://sgp.fas.org/crs/misc/IF12020.pdf Accessed: Feb. 22, 2025.

[8] Wenjie Zhang, Zhang Guanglin, Liwei Yang, and Chai Yeo. 2018. TV white space and its applications in future wireless networks and communications: A survey. *IET Communications* 12 (09 2018).