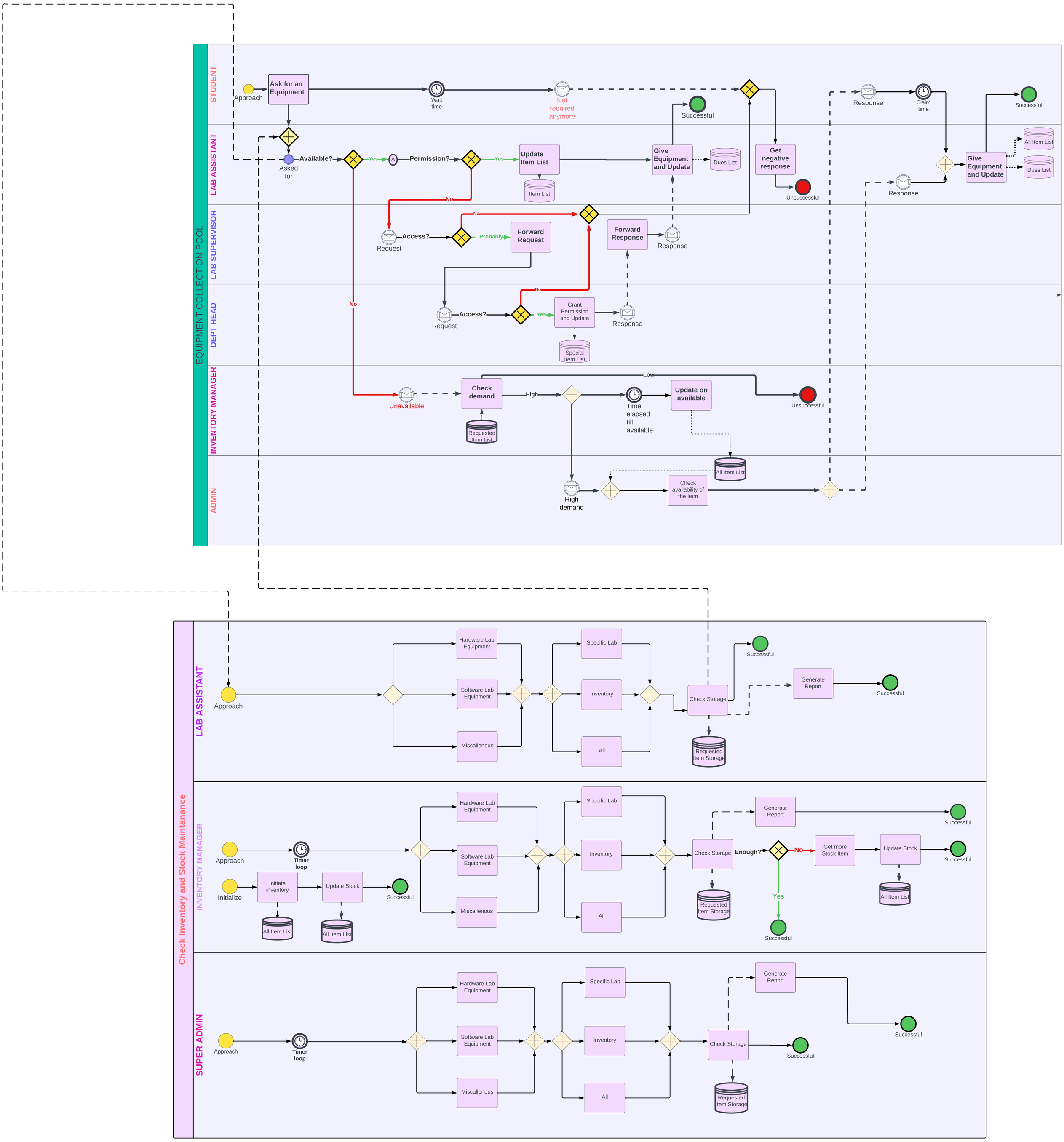
EQUIPMENT COLLECTION POOL
STUDENT
LAB ASSISTANT
LAB SUPERVISOR
DEPT HEAD
INVENTORY MANAGER
ADMIN
Approach
Ask for an Equipment
Wait time
Not required anymore
Successful
Response
Claim time
Successful
Asked for
Available?
Yes
Permission?
Yes
Update Item List
Item List
Give Equipment and Update
Dues List
Get negative response
Unsuccessful
All Item List
Give Equipment and Update
Dues List
Response
No
Request
Access?
Probably
Forward Request
Forward Response
Response
No
Request
Access?
Yes
Grant Permission and Update
Response
Special Item List
No
Unavailable
Check demand
High
Low
Time elapsed till available
Update on available
Unsuccessful
Requested Item List
All Item List
High demand
Check availability of the item
Check Inventory and Stock Maintanance
LAB ASSISTANT
Approach
Hardware Lab Equipment
Software Lab Equipment
Miscallenous
Specific Lab
Inventory
All
Check Storage
Successful
Generate Report
Successful
Requested Item Storage
INVENTORY MANAGER
Approach
Timer loop
Initialize
Initiate inventory
Update Stock
Successful
All Item List
All Item List
Hardware Lab Equipment
Software Lab Equipment
Miscallenous
Specific Lab
Inventory
All
Check Storage
Enough?
No
Yes
Generate Report
Successful
Get more Stock Item
Update Stock
Successful
All Item List
Requested Item Storage
Successful
SUPER ADMIN
Approach
Timer loop
Hardware Lab Equipment
Software Lab Equipment
Miscallenous
Specific Lab
Inventory
All
Check Storage
Generate Report
Successful
Successful
Requested Item Storage
Yes
CLEARANCE GRANT POOL
SUPERADMIN
Start
Check Dues
Dues List
Dues?
No
Update Clearance
Clearance
Clearance List
DUES STATUS POOL
LAB ASSISTANT
Approach
Check Dues
Dues List
Notification
Get Compensation amount for the item
Dues List
Update dues List
Dues List
No dues
Clear Dues
STUDENT
Approach
Check Dues
Dues List
Dues Notification
Lost or Damaged?
Yes
No
Compensation amount
Clearance Granted
14 days
Alert