MOON ROOF

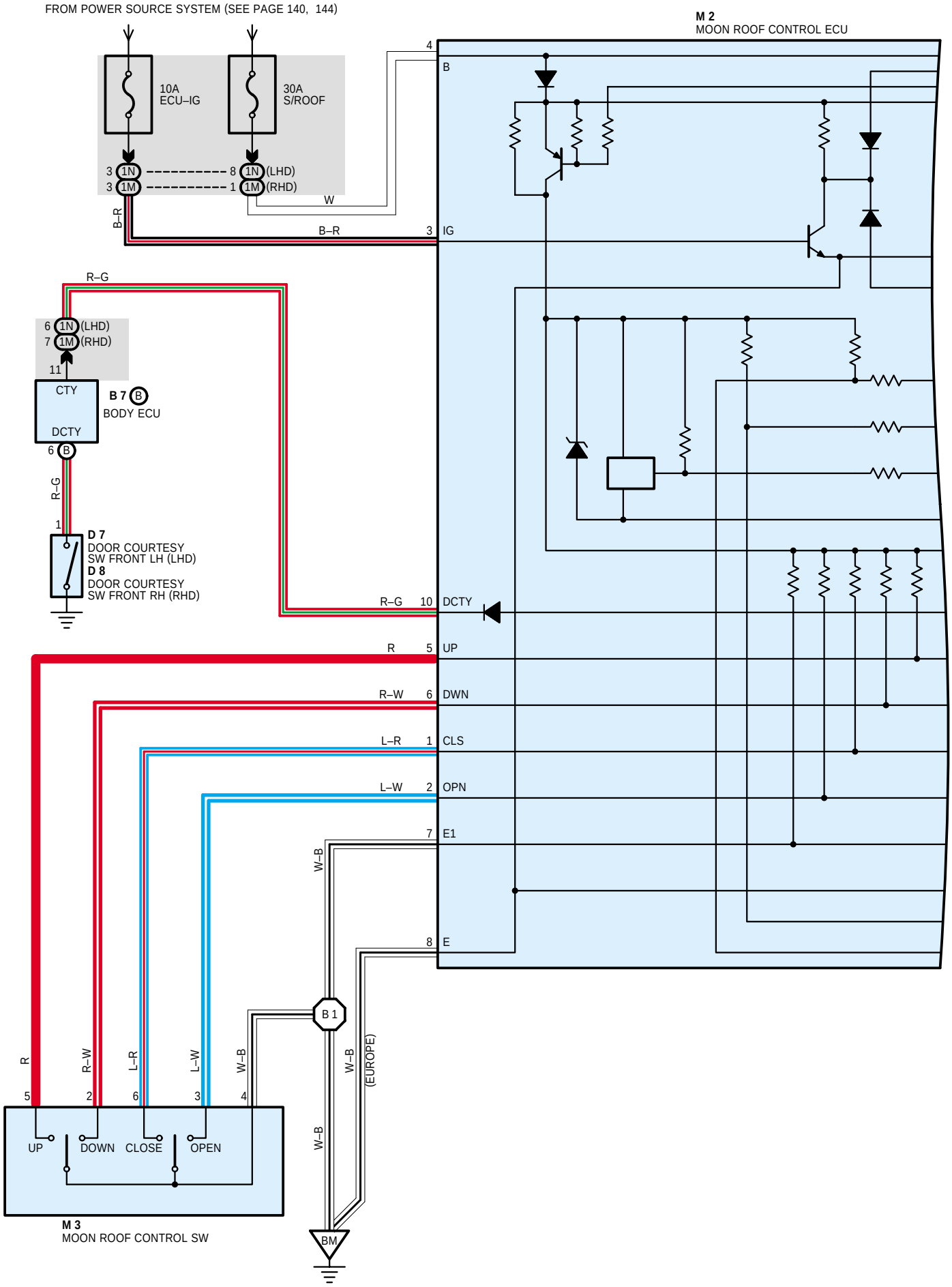
FROM POWER SOURCE SYSTEM (SEE PAGE 140, 144)
M 2
MOON ROOF CONTROL ECU
10A
ECU–IG
30A
S/ROOF
3 1N
3 1M
8 1N (LHD)
1 1M (RHD)
W
B–R
B–R
4 B
3 IG
R–G
6 1N (LHD)
7 1M (RHD)
11
CTY
DCTY
B 7 B
BODY ECU
6 B
R–G
1
D 7
DOOR COURTESY
SW FRONT LH (LHD)
D 8
DOOR COURTESY
SW FRONT RH (RHD)
R–G 10 DCTY
R 5 UP
R–W 6 DWN
L–R 1 CLS
L–W 2 OPN
7 E1
8 E
W–B
B 1
R
R–W
L–R
L–W
W–B
W–B
(EUROPE)
W–B
5
2
6
3
4
UP
DOWN
CLOSE
OPEN
M 3
MOON ROOF CONTROL SW
BM
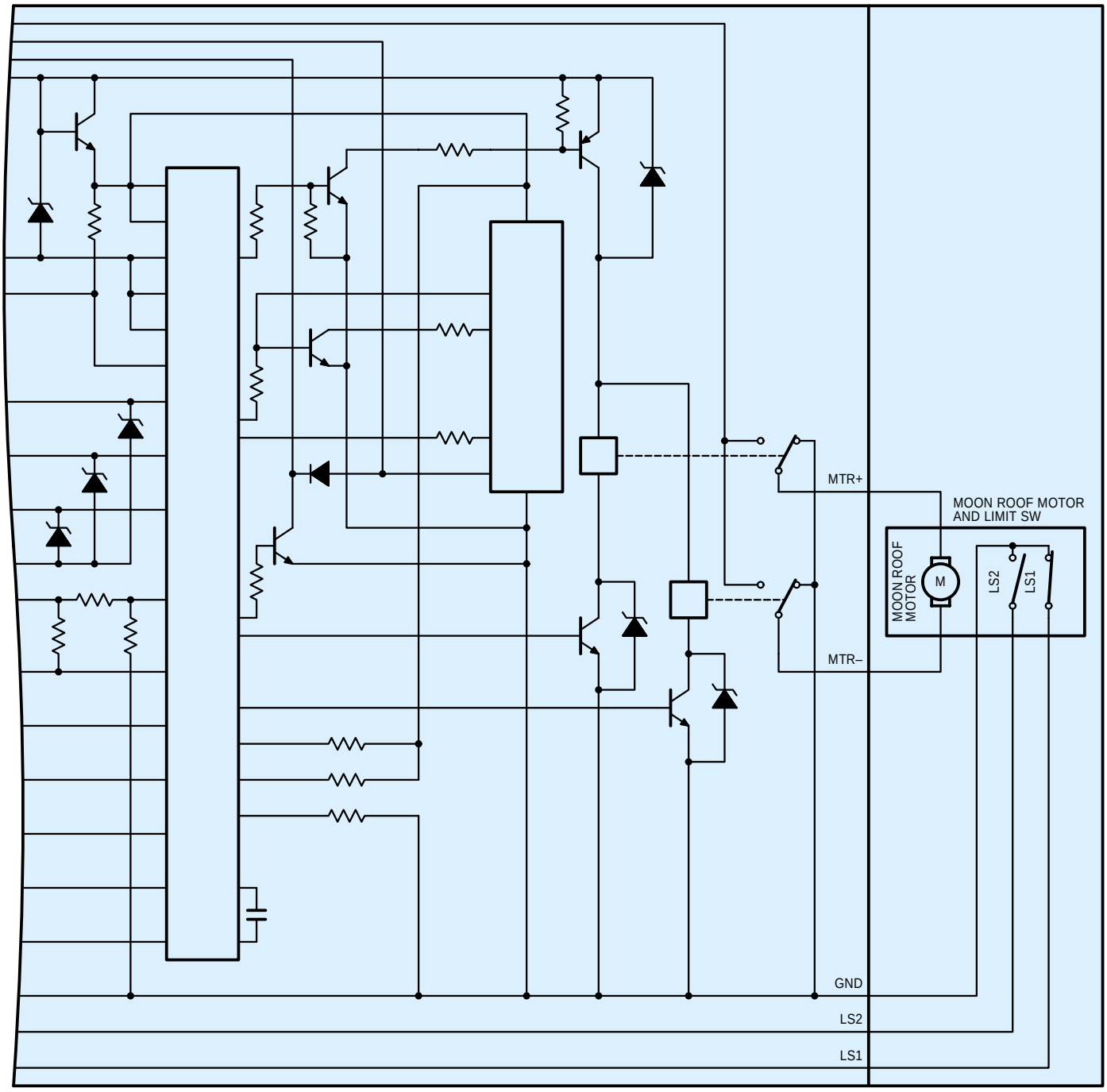
M 2
MOON ROOF CONTROL ECU