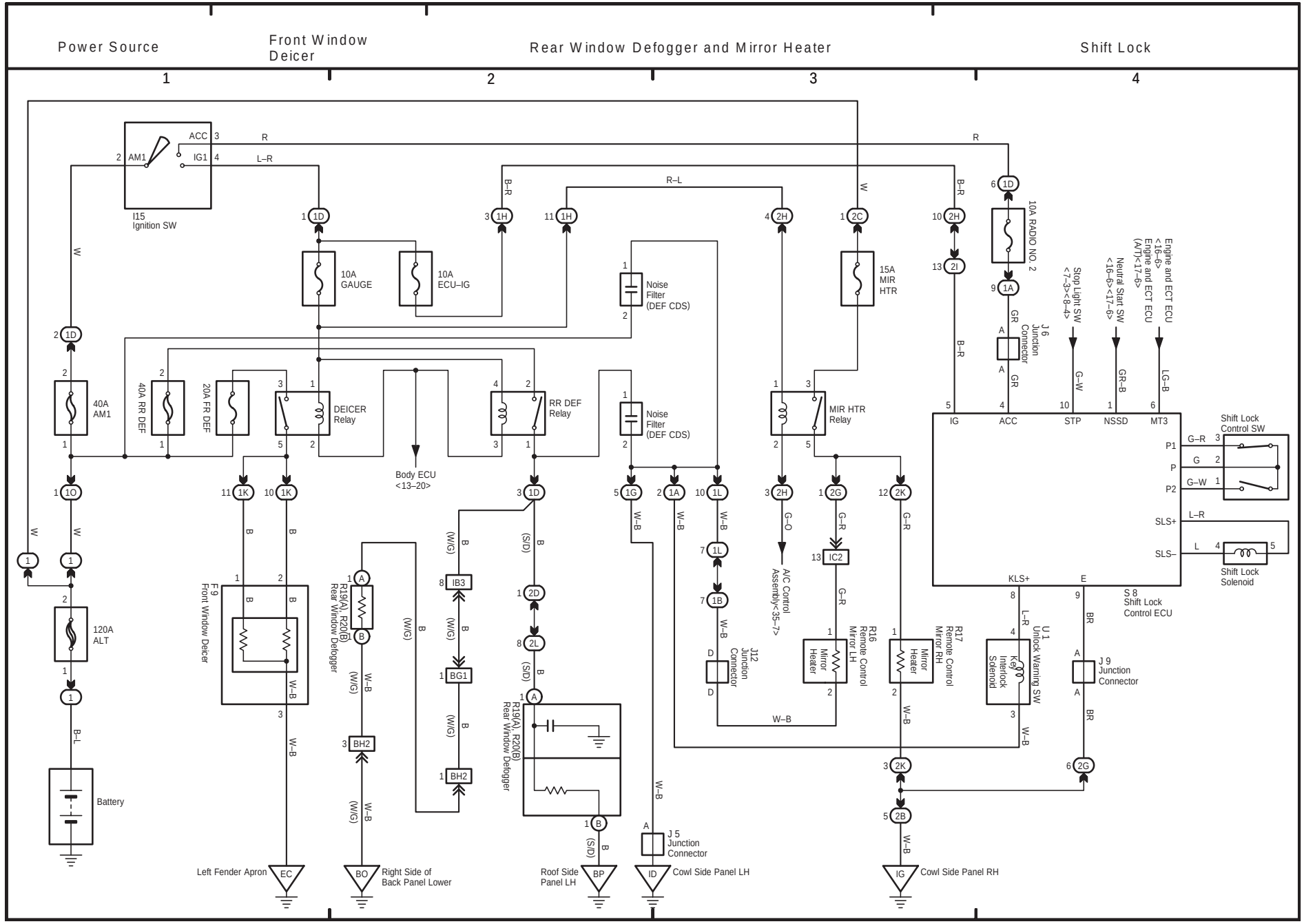

OVERALL ELECTRICAL WIRING DIAGRAM