■ HEADLIGHT CLEANER SYSTEM

1. General

- The headlight cleaner system is standard equipment on the IS300/IS300 SportCross models, and optional equipment on the IS200.
- In addition to the previous operation, a new function that operates in unison withe the front windshield washer has been adopted.

▶ Operation ◀

Item	Headlight Cleaner Switch ON	Window Washer Switch ON (first time)	Window Washer Switch ON (second time and ON)
DRL (Daytime Running Light) ON*1	○	—	—
Headlight ON	○	○	—
Headlight OFF	—	—	—

*1: with DRL System ○: activate —: not activated

2. Wiring Diagram

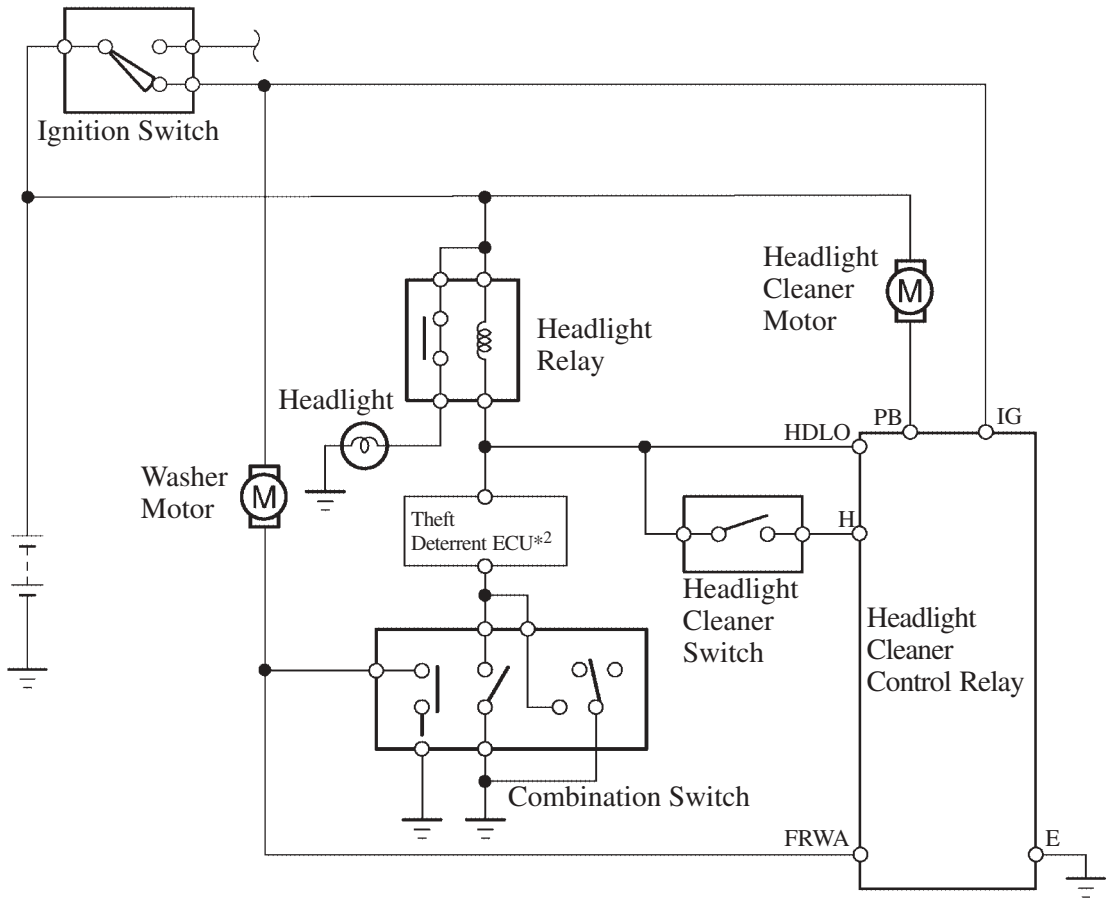

for Models without DRL System

204BE12

*2: with Theft Deterrent System