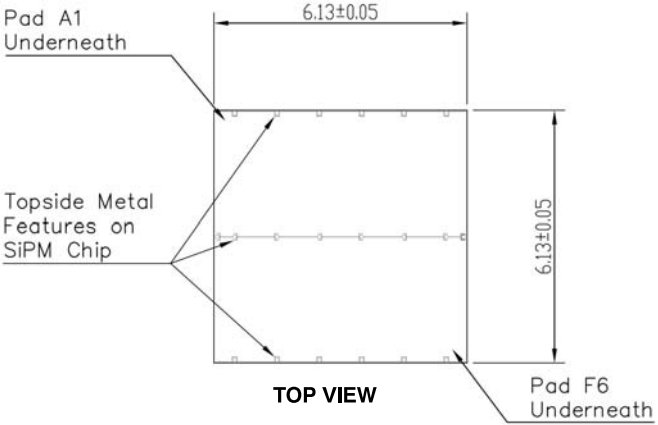

TOP VIEW

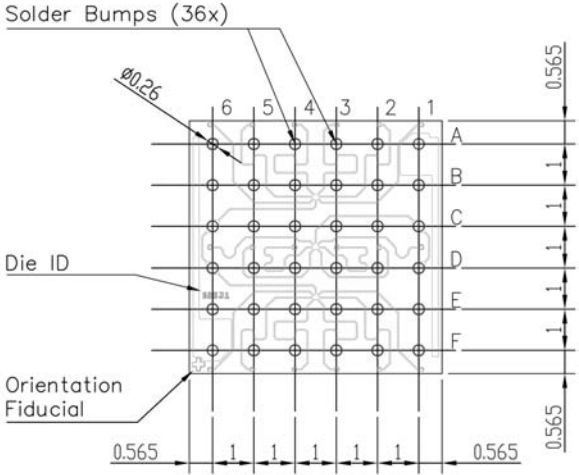

BOTTOM VIEW

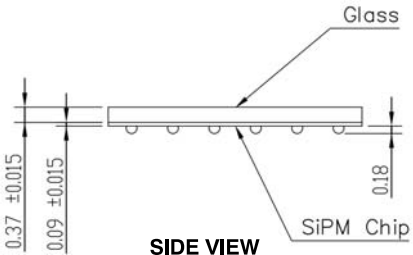

SIDE VIEW

Pin Assignments	
Pin Number	**MicroFJ–60035–TSV**
C1, D1	Anode
A1, F6	Cathode
C6, D6	Fast output
All others	No Connect