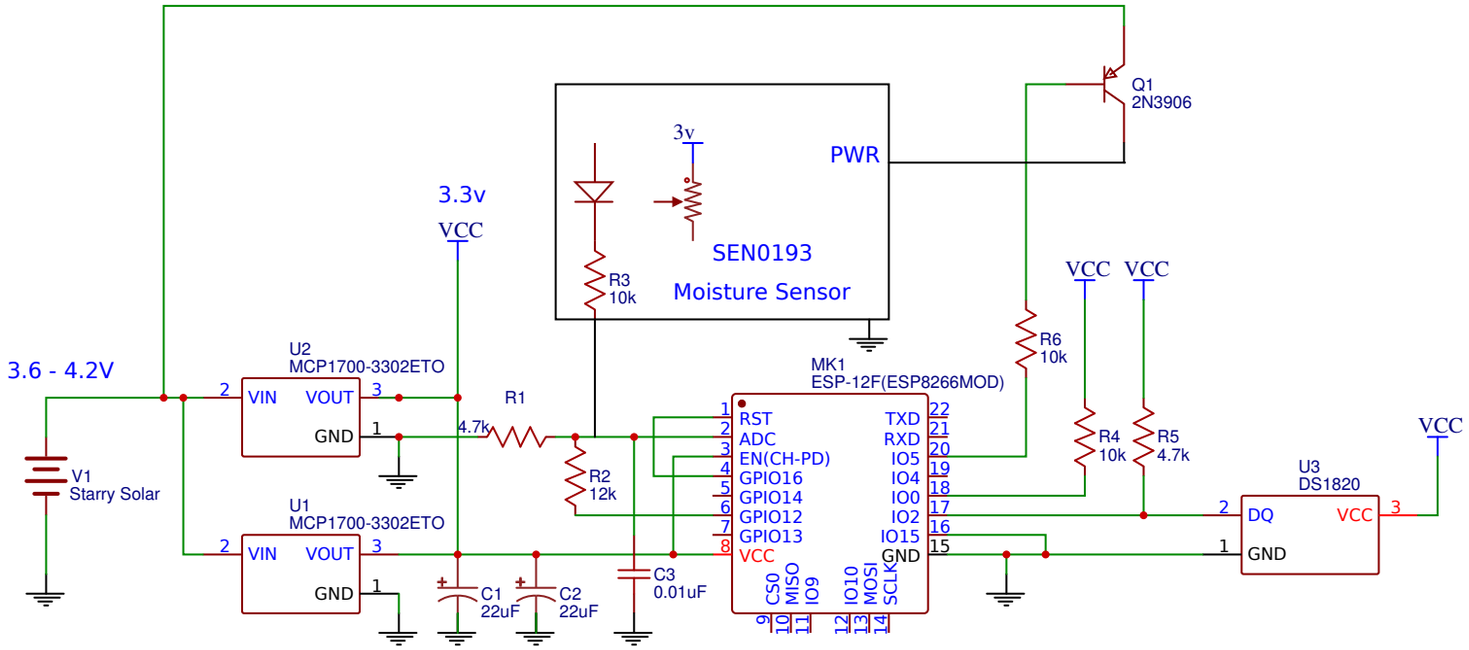

2 regs for current

TITLE: Soil Monitor	REV: 1.0
Date: 2017-09-06	Sheet: 1/1
EasyEDA V4.8.5	Drawn By: Mike Russell