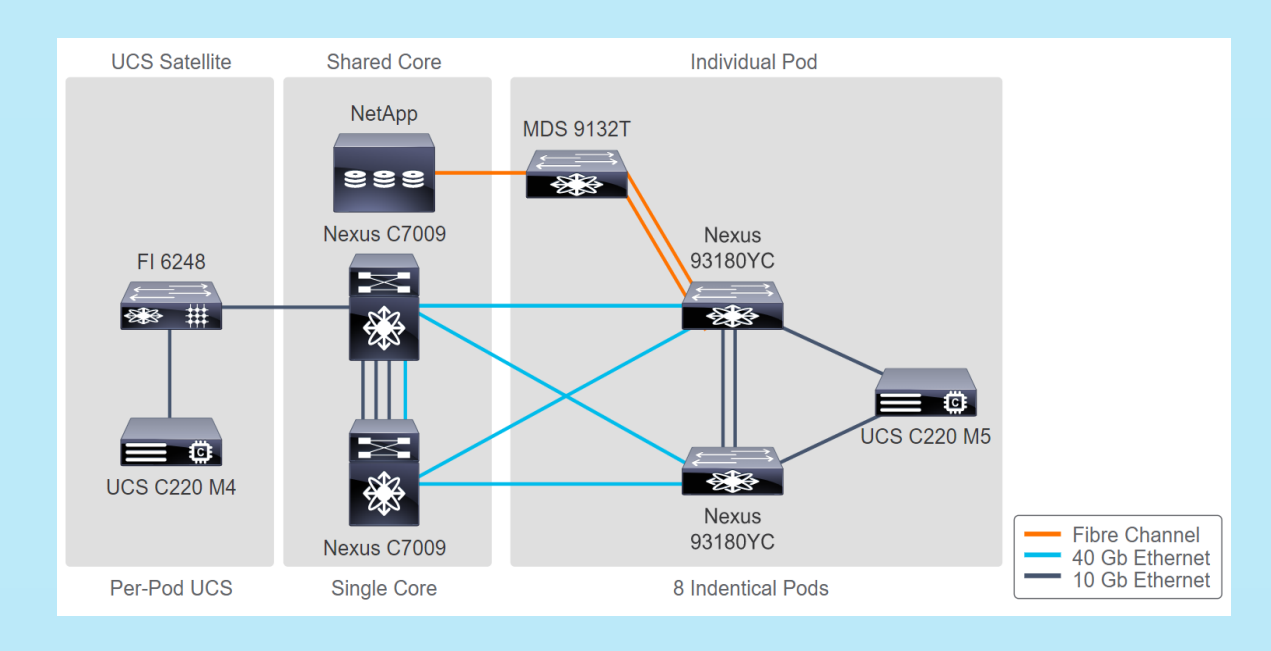
UCS Satellite
Shared Core
Individual Pod
NetApp
MDS 9132T
FI 6248
Nexus C7000
Nexus 93180YC
UCS C220 M4
UCS C220 M5
Nexus C7000
Nexus 93180YC
Pair-Pod UCS
Single Core
8 Individual Pods
Fibre Channel
40 Gb Ethernet
10 Gb Ethernet

UCS Manager
Create Organization
Create UUID Suffix Pool
Create a Block of UUID Suffixes
Create MAC Pool
Create a Block of MAC Addresses
Create VLANs
Create Service Profile Template
Create vNIC
Create Boot Policy
Create Server Pool
Create IP Pool
Create Block of IPv4 Addresses
Create Service Profiles From Template
Associate Service Profile
WARNING
OK
Cancel
Finish
Next >
< Prev