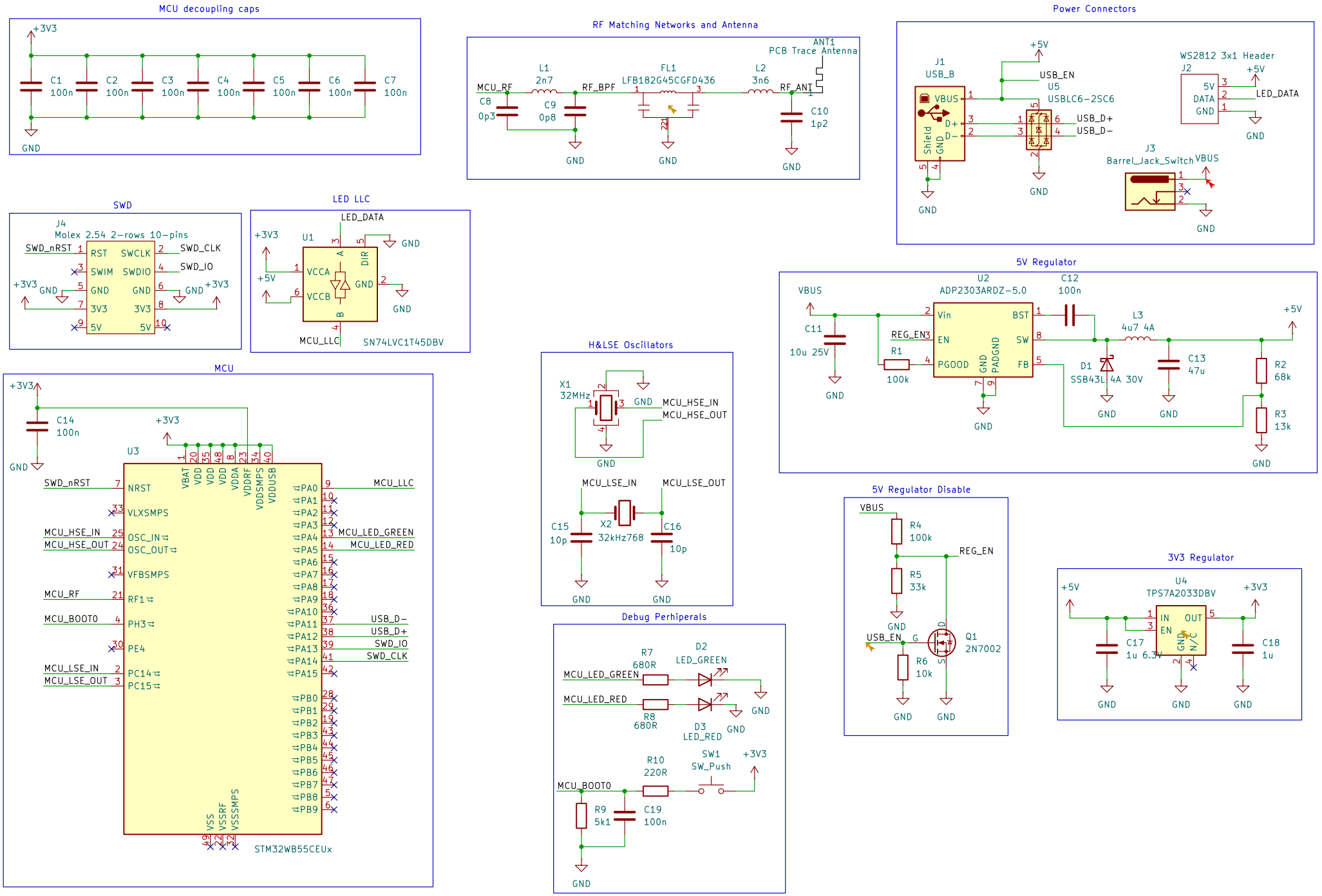
MCU decoupling caps
+3V3
C1 100n
C2 100n
C3 100n
C4 100n
C5 100n
C6 100n
C7 100n
GND
RF Matching Networks and Antenna
ANT1
PCB Trace Antenna
MCU_RF
C8 0p3
L1 2n7
C9 0p8
RF_BPF
FL1 LFB182G45CGFD436
L2 3n6
RF_ANT
C10 1p2
GND
Power Connectors
J1 USB_B
VBUS
D+
D−
Shield
GND
+5V
USB_EN
U5 USBLC6-2SC6
USB_D+
USB_D−
WS2812 3x1 Header
J2
5V
DATA
GND
LED_DATA
J3 Barrel_Jack_Switch
VBUS
SWD
J4 Molex 2.54 2-rows 10-pins
SWD_nRST
RST
SWCLK
SWD_CLK
SWIM
SWDIO
SWD_IO
GND
3V3
5V
LED LLC
LED_DATA
+3V3
U1
VCCA
VCCB
A
B
DIR
GND
+5V
MCU_LLC
SN74LVC1T45DBV
5V Regulator
U2 ADP2303ARDZ-5.0
VBUS
C11 10u 25V
C12 100n
Vin
EN
PGOOD
BST
SW
FB
GND
PADGND
REG_EN
R1 100k
L3 4u7 4A
D1 SSB43L 4A 30V
C13 47u
R2 68k
R3 13k
+5V
H&LSE Oscillators
X1 32MHz
MCU_HSE_IN
MCU_HSE_OUT
MCU_LSE_IN
MCU_LSE_OUT
X2 32kHz768
C15 10p
C16 10p
MCU
U3
+3V3
C14 100n
VBAT
VDD
VDDA
VDDRF
VDDSMPS
VDDUSB
NRST
VLXSMPS
OSC_IN
OSC_OUT
VFBSMPS
RF1
PH3
PE4
PC14
PC15
PA0
PA11
PA12
PA13
PA14
PA15
PB0
PB9
MCU_LED_GREEN
MCU_LED_RED
USB_D−
USB_D+
SWD_IO
SWD_CLK
MCU_BOOT0
VSS
VSSRF
VSSSMPS
STM32WB55CEUx
5V Regulator Disable
VBUS
R4 100k
R5 33k
REG_EN
USB_EN
R6 10k
Q1 2N7002
3V3 Regulator
U4 TPS7A2033DBV
IN
OUT
EN
GND
N/C
C17 1u 6.3V
C18 1u
Debug Perhiperals
R7 680R
D2 LED_GREEN
R8 680R
D3 LED_RED
R10 220R
SW1 SW_Push
R9 5k1
C19 100n