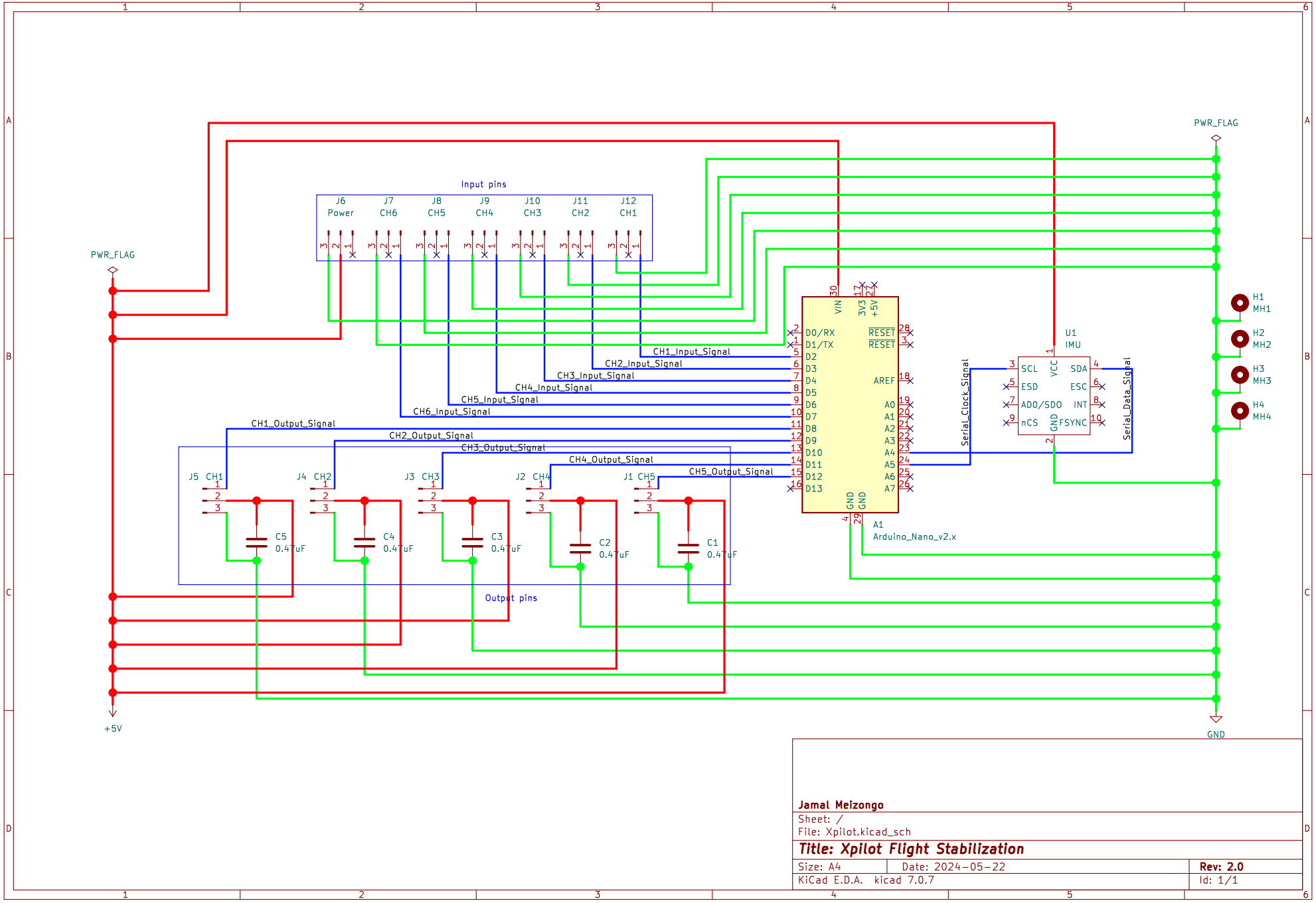

Jamal Meizongo

Sheet: /

File: Xpilot.kicad_sch

Title: Xpilot Flight Stabilization

Size: A4	Date: 2024-05-22	**Rev: 2.0**
KiCad E.D.A. kicad 7.0.7		Id: 1/1