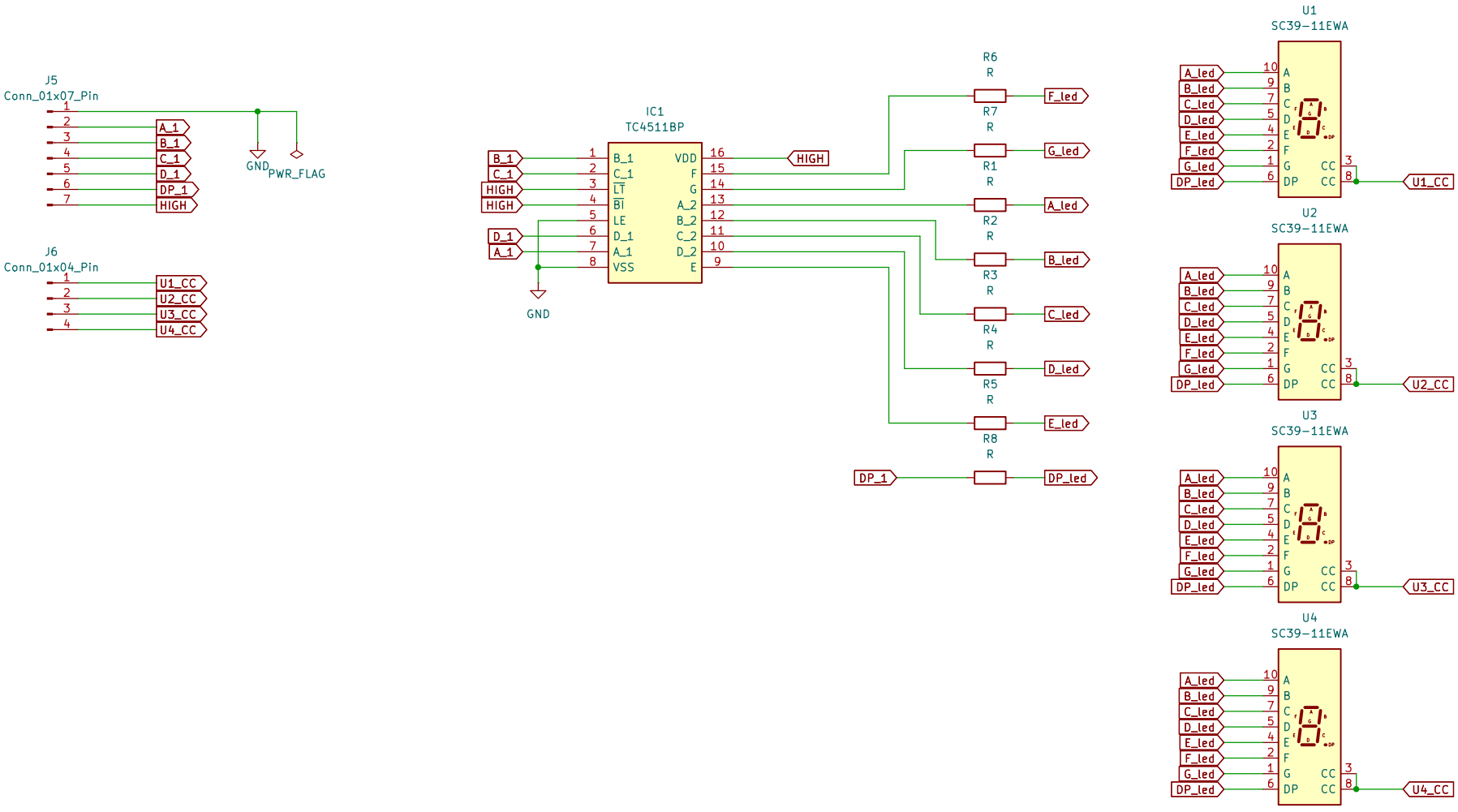

* Indicates a PWM-capable pin