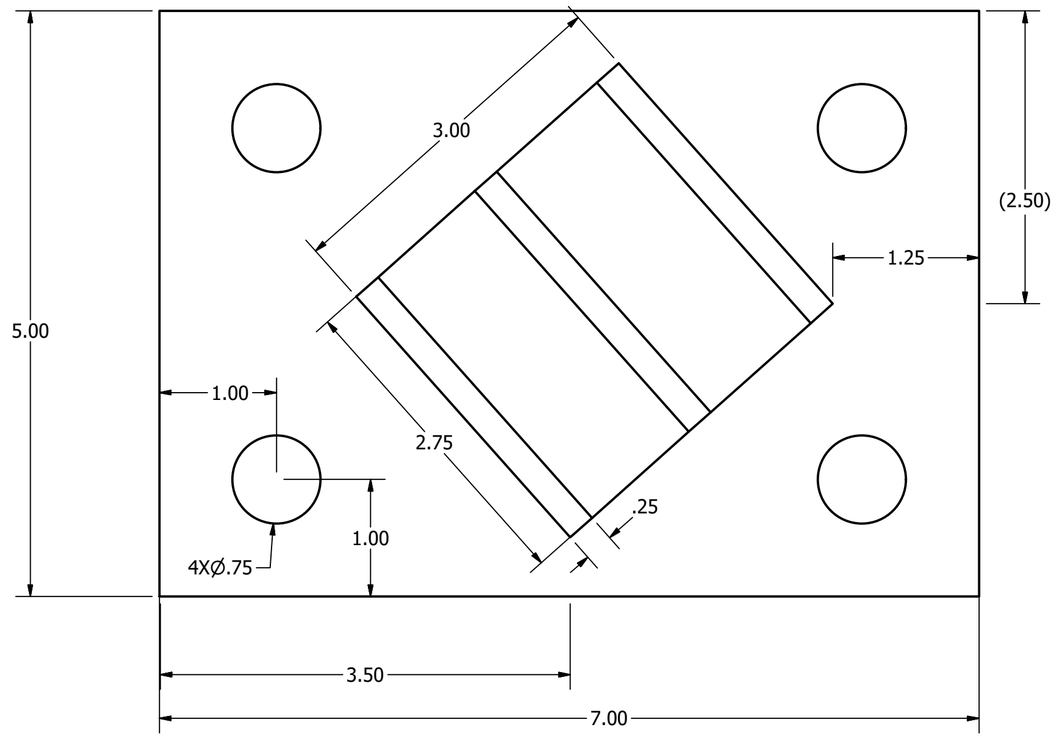

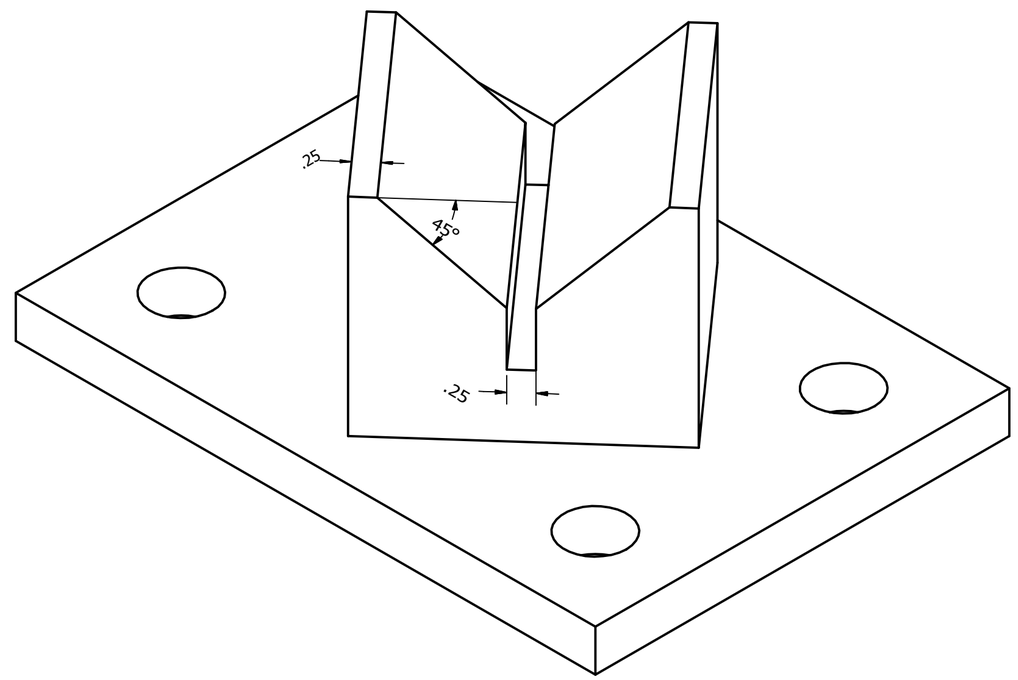

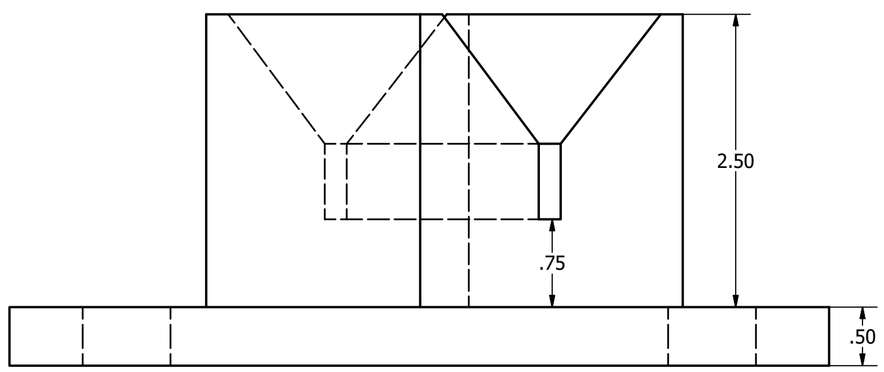

DRAWN Melissa	3/22/2016	Saint Martin's University
CHECKED		TITLE
QA		Angle V-Block
MFG		
APPROVED		
		SIZE C / DWG NO HW 9 Part 5 / REV
		SCALE / SHEET 1 OF 1