INSTRUCTION GUIDE

Vector 3D Califlower

Version 4.0

Contents

INTRODUCTION **2**

WHEN TO USE CALIFLOWER 2
MEASURING TOOLS 2
FILAMENT USAGE 2
ORIENTATION 2
GETTING HELP 2

DIMENSIONAL ACCURACY AND XY SKEW **2**

TEST FILE 2
SETTINGS 3
TAKING MEASUREMENTS 3
Outer Measurements 3
Inner Measurements 5
MEASUREMENT LOCATIONS 8
UNDERSTANDING RESULTS 10
MAKING CORRECTIONS 10
X Y Adjustments 10
Skew Adjustments 11

Introduction

Congratulations on getting started with the Vector 3D Califlower. This document exists to help you with getting the most out of the files, help you understand the test results, and tune your printer to improve performance.

When to use Califlower

Califlower, although simple, is a precision calibration design. Rough printing surfaces, bad stringing, warping, or uneven extrusion can significantly affect the quality of the outcome. For that reason, I do not recommend this print as the first tuning step, rather it should be one of the last that you do. For all intents and purposes, your printer should be working pretty well before you do this calibration. If you plan on tuning them, things like extrusion multiplier, belt tension, input shaping and pressure advance should all be dialled in before doing Califlower if you're after the best results.

Measuring Tools

Taking Califlower measurements requires you to have digital or vernier callipers with a measuring range of at least 100mm. Those with a 150mm range are very common so they should be easy to find. Mitutoyo are well known as being the 'best', but they also come with an eye watering price tag. I would only recommend those for commercial purposes. I recommend using the best you can afford.

Filament Usage

As the Califlower has very little functional use after the testing is completed (but can be a tea coaster), I've done my best to minimise the amount of plastic used for these tests in an effort to reduce waste. Please do your part by printing this file as few times as possible to achieve the desired results. Also, avoid printing multiple tests simultaneously on the same print bed as this can affect the print results.

Orientation

All Vector 3D calibration STLs files are orientated correctly upon importing to the slicer so there is no need to spin them about. They are also always marked with the X and Y directions on the parts so that you know once the file is removed from the printer, which way it was facing when it was printed. This is important and often overlooked as knowing the direction can be important to diagnosing specific issues like cooling or dimensional calibration.

Getting Help

You can ask on the Vector 3D discord in the #calibration channel, we're here to help so come and join us using this link: https://discord.gg/xXmuUpJhxc

Discord

Dimensional Accuracy and XY Skew

Test File

This test is affectionately known as the Califlower. A dimensional test that determines the ability of your printer, settings, and filament to print geometrically accurately and allows you to calibrate your printer to improve results for future prints.

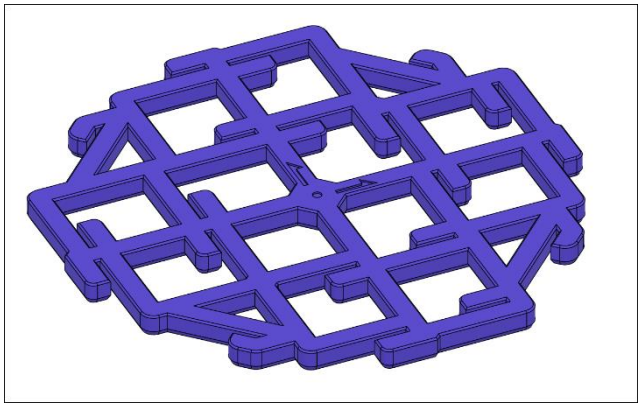

Figure 1: Vector 3D Dimensional and Skew Test: "Califlower"

Settings

When considering how to print Califlower its best to go with your normal slicer settings as that will allow you to understand what to expect from a typical print. The filament choice is important because of the different expansion and contraction rates. Repeating the test with different filaments will help you understand how this affects the size and what you need to do to get the best results. You don't need to combine results from different filaments, instead you can use material shrinkage values to accommodate for the differences between filaments.

The calculator has the option of printing at a larger scale. So if you have large vernier/digital callipers and wish to print at a larger size, you can scale the print in your slicer and then just remember to adjust the scale in the calculator by the same amount.

Scale	100%
(if you have a larger printer, and larger tools, you can print at larger scale)	

Figure 2: Adjustment for scale in the cauliflower calculator.

Taking Measurements

There are ten separate dimensions that need to be collected from this print. Every dimension should be approximately 50mm or 100mm. If you get measurements that are more than 5mm from this, and the printed part looks correct, you may be measuring in the wrong place.

To take the measurements, use a set of callipers, either vernier or digital. You'll need to take both 'inner' and 'outer' dimensions so make sure you are familiar with how to use the callipers to do this. Remember, the arrows on the print point towards X+ and Y+ so make sure you identify this before noting down the dimensions.

Outer Measurements

Below is an example of how to take a 100mm outer measurement. Note how the calliper tips are positioned, on what face they measure, and how the Califlower spurs are used to align the callipers to a consistent measurement position.

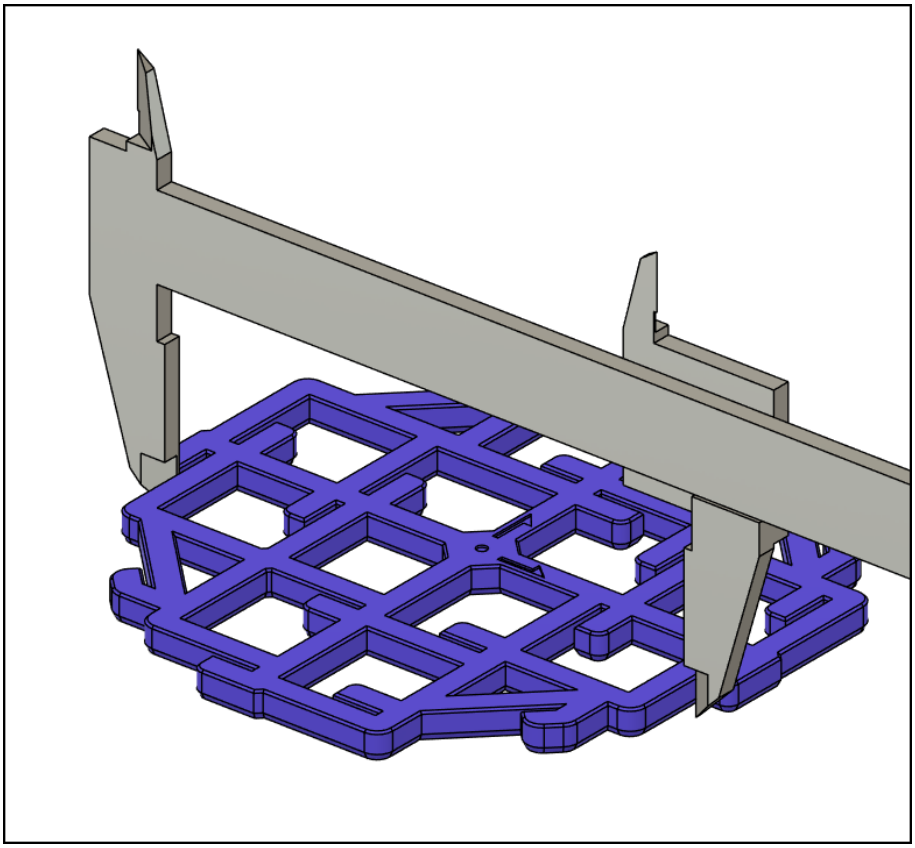

Figure 3: Callipers positioned on Califlower for a 100mm outer measurement.

This cross sectional view through the cauliflower should also help you identify how to position the callipers for an outer dimension reading. Califlower is shown in light red with narrow hatch pattern and the callipers are shown in light blue with an opposting pattern.

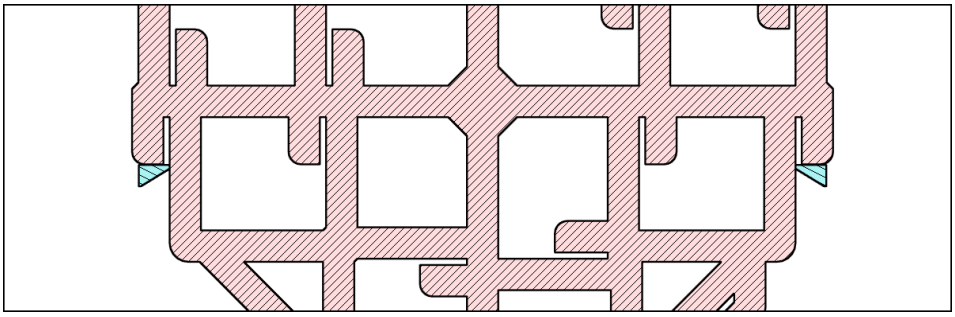

Figure 4: Cross section showing calliper position for 100mm outer measurement.

The example below is how to take an outer measurement for the 50mm size. Again, take note of how the callipers are placed, what faces are being measured, and how the spurs are used for alignment. The cross section, also shown below, will also assist in calliper placement and good measuring technique.

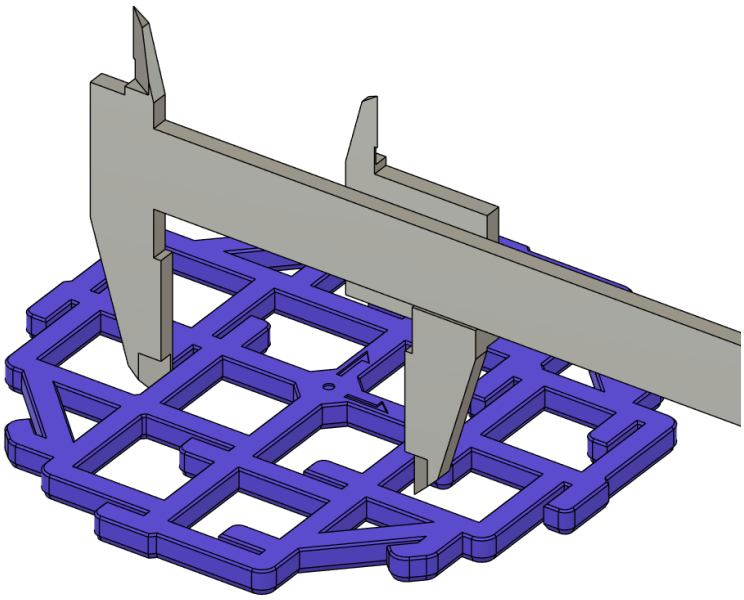

Figure 5: Callipers positioned on Califlower for a 50mm outer measurement.

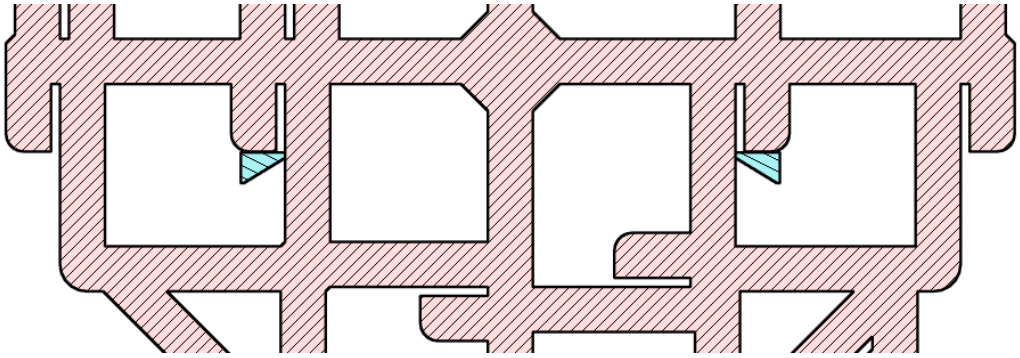

Figure 6: Cross section showing calliper position for 50mm outer measurement.

Inner Measurements

Inner Measurements can be a little harder to identify where to place the callipers and what faces to measure. To take inner dimensions you must you use the inverted tips which stick out the top of the callipers. Unlike the 'normal' calliper tips, these inverted ones for inner measurements oppose each other, so the spurs on the print are positioned slightly differently. Take note of this when positioning the callipers.

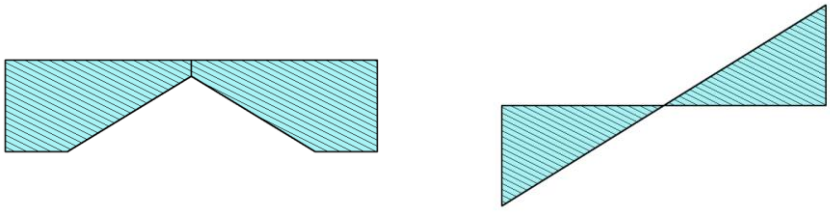

Figure 7: Notice how the 'normal' calliper tips (left) are adjacent, whereas the inverted tips (right) oppose each other.

Note: To the best of my knowledge, all callipers are designed this way, with the inverted tips opposing. If you have callipers that are designed differently to this and will not allow correct measurement, please let us know via the contact form on the website, or by emailing info@vector3d.co.uk.

Below you can see the correct way to place the callipers on the Califlower to measure a 100mm inner dimension. Note how the calliper tips are positioned, on what face they measure, and how the Califlower spurs are used to align the callipers to a consistent measurement position.

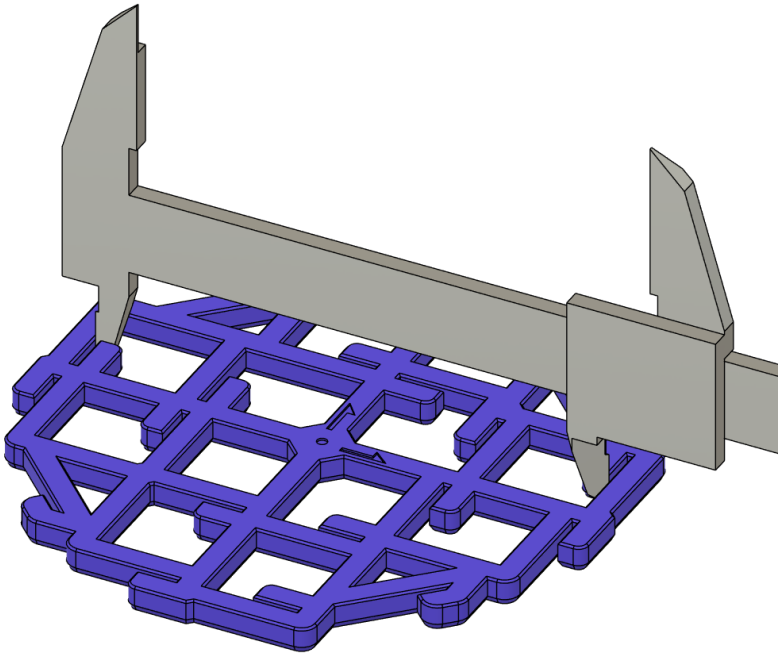

Figure 8: Callipers positioned on Califlower for a 100mm inner measurement.

From the cross section below you can see a little more clearly how the calliper tips need to be positioned on Califlower and how the flat parts of the inverted tips must align with the spurs for the best measurement results. The Califlower is shown in light red with narrow hatch pattern and the tips are shown in light blue with an opposing hatch.

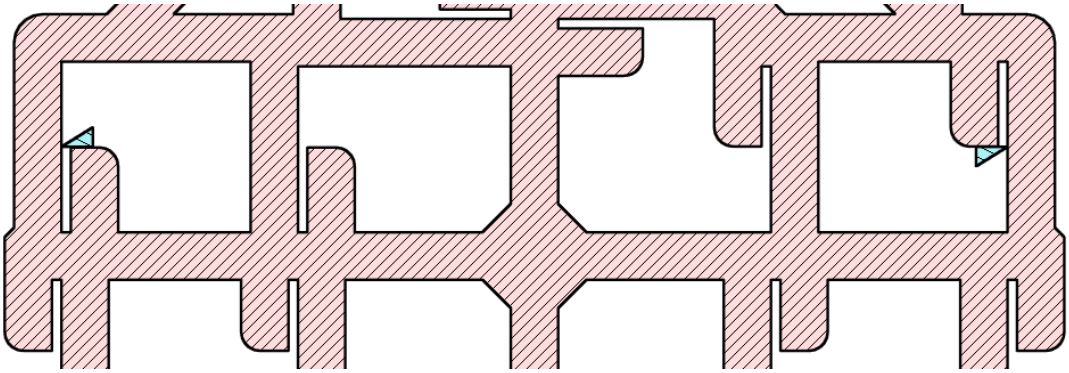

Figure 9: Cross section showing calliper position for a 100mm inner measurement.

Just as with the outer dimensions, you also need to take a 50mm inner measurement. Of course the callipers will also need to be used in their inverted configuration. Again, note how the calliper tips are positioned, on what face they measure, and how the Califlower spurs are used to align the callipers to a consistent measurement position.

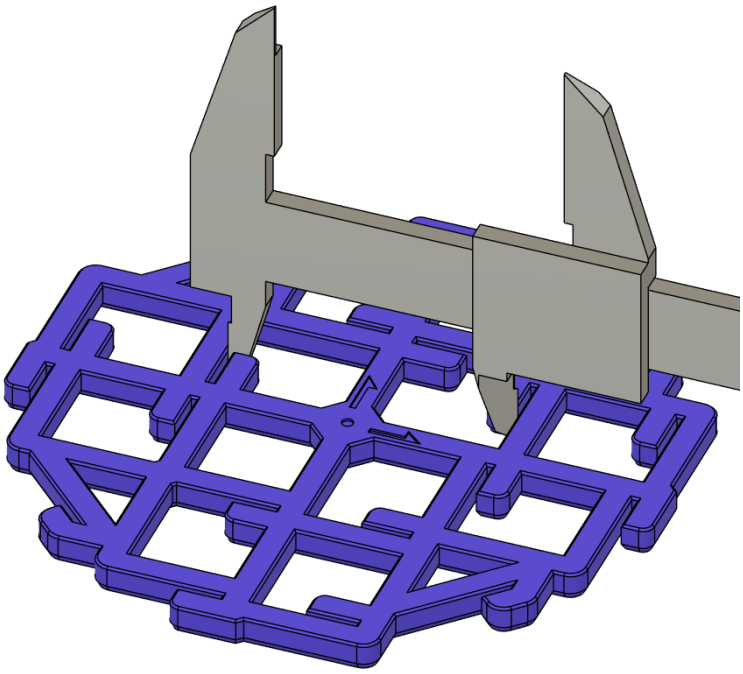

Figure 10: Callipers positioned on Califlower for a 50mm inner measurement.

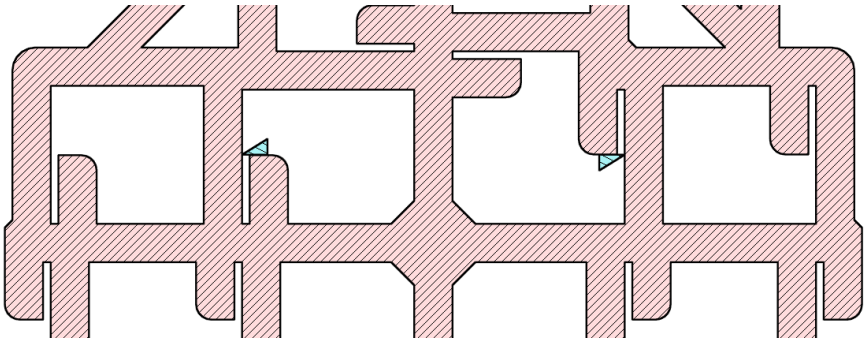

Figure 11: Cross section showing calliper position for a 50mm inner measurement.

Measurement Locations

The measurement locations are shown in Figure 12, also repeated in the calculator. Locations 1, 2, 5, 6, 9, 10 should be measured as outer dimensions while 3, 4, 7, and 8, should be measured as internal dimensions.

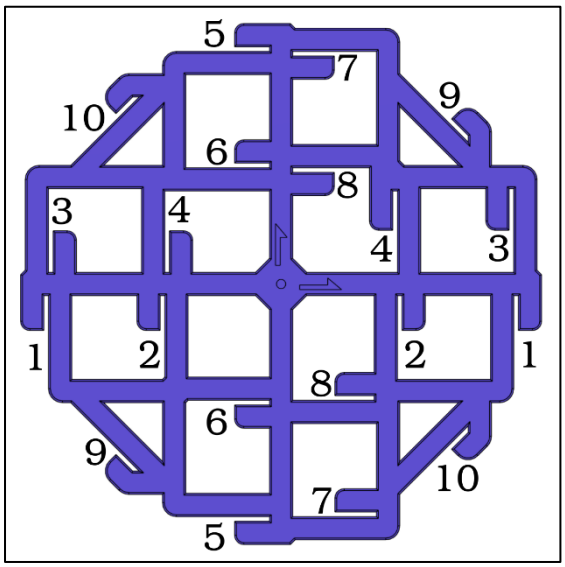

Figure 12: Calibration flow measurement locations.

Log the measurements in the Calibration Calculator provided with this document in the area marked 'measurements' in the numbered boxes. Remember to take each reading three times, the calculator will then determine the average of these readings. The target dimensions are shown by default.

	Reading 1	Reading 2	Reading 3	Average
1	100.00	100.00	100.00	100.00
2	50.00	50.00	50.00	50.00
3	100.00	100.00	100.00	100.00
4	50.00	50.00	50.00	50.00
5	100.00	100.00	100.00	100.00
6	50.00	50.00	50.00	50.00
7	100.00	100.00	100.00	100.00
8	50.00	50.00	50.00	50.00
9	100.00	100.00	100.00	100.00
10	100.00	100.00	100.00	100.00

Figure 13: Measurements recorded in the table.

The readings have conditional formatting which means they can change colour based on the value. The box colour can be green, yellow or red. If the calculator thinks you may have measured the wrong size, based on the deviation from the target, the box will read either yellow or red.

These highlights do not represent the quality of your print, such as whether you need calibration, they are simply an indication that you measured in the right place. The values that determine the colours are shown on the calculator below the measurements table.

Green	<1mm deviation. Measurement seems ok. Continue.
Yellow	>1mm deviation warning. Double-check your measurement.
Red	>5mm deviation warning. Steps/mm or large measurement error.

Figure 14: Deviation conditional formatting ranges.

If your measurement shows green, continue. If you're measurement shows yellow, you might be ok, just do a quick double check. If your measurement shows red, you're probably measuring in the wrong place, review the measurement locations and techniques shown above.

Understanding Results

The errors identified using this test typically come from incorrect Steps/mm, filament contraction, and mechanical build issues. If your results are more than 1mm away from their intended dimensions, check that your steps/mm are set correctly and that your belt tension is good.

The results of these tests come in three forms, XY size, skew, and inner/outer. These are shown in a table under the heading Results.

Results

	Error	Correction
X	0.00%	0.00%
Y	0.00%	0.00%
Skew	0.00°	0.00°
Inner	0.00%	0.00%
Outer	0.00%	0.00%

Figure 15: Results table

For XY size the results are provided as a percentage. At the default size of 100mm, 1%=1mm, so that should help you understand how far off your prints are. Positional error can scale with the travel distance so it's important to get this dialled in accurately.

Skew results are shown as an angle. Angles do not change with scale, but the further you travel at an incorrect angle, the larger the error is. Therefore, the larger your printed parts, the more important this value becomes.

The inner and outer results are indicators of over or under extrusion. Inner refers to the Inner measurements that you took, and outer refers to the outer dimensions that you took. As your XY size improves in accuracy the inner and outer measurements will become opposite of one another (one could be +0.1, the other would be -0.1) and ideally also go to zero. In reality the walls are often too thick or too thin so they won't go to zero. If the walls are too thick you inner results will typically be below the target (negative percentage) and the outer dimensions will be above the target (positive percentage). When the walls are too thin, it'll be the opposite way around, inner will be positive, outer will be negative.

In an ideal world we could use this value to precisely tune the extrusion multiplier, but so far the precise method to do this has been elusive. Considering that, we simply use it as an indicator, and you can use it to help identify extrusion issues, just not tune them precisely.

Making Corrections

X Y Adjustments

For adjusting size errors there are three methods we can use for correction; changing the firmware steps per mm (rotation distance in klipper), using your slicer to incorporate XY shrinkage, or scaling the part in the slicer.

If the results shown for X and Y are within 0.5% then this is best adjusted via shrinkage compensation as the error is likely down to the filament shrinking when it cools. Unfortunately, this feature only seems to be available in SuperSlicer and Orca Slicer currently (the fixed absolute adjustment in Prusa Slicer, such as 0.2mm, is not an appropriate method for compensation). You can copy the value shown in the 'Super/Orca Slicer' box into the filament shrinking compensation value in the slicer to implement this correction.

Fix Size

Material XY shinkage Compensation

Super/Orca Slicer	99.58
Or	
XY Part Scale (%)	100.42

Steps/mm

	Input your values below
Current Steps/mm (X)	100
Current Steps/mm (Y)	100
New Steps/mm (X)	100.00
New Steps/mm (Y)	100.83

Rotation Distance

	Input your values below
Current Rot. Dist. (X)	100
Current Rot. Dist. (Y)	100
New Rot. Dist. (X)	100.00
New Rot. Dist. (Y)	99.17

Figure 16: Integrated shrinkage, steps and rotation calculator

If you don't use a slicer which can accommodate material shrinkage, an alternative option when the error is less than about 0.5% is to use part scaling. This can be irritating to implement as it would have to be done to every part you add to the slicer, but it can be done using the 'XY Part Scale' value shown in the material compensation section. Simply unlock the scale so it applies to each axis individually and paste this value into X and Y, leaving Z at 100%.

If you have error more than around 0.5%, then it's recommended to adjust via changing the steps/mm or rotation distance (or also check over your build as something may be loose). Firstly, get the current values from your printer. For Klipper and RRF just check your configuration file, for Marlin use M503 to show current steps/mm. Place these values into the appropriate boxes for X/Y, and then copy the new values into your firmware. For Marlin use M92 (example: M92 X80.67 Y80.32) to send these values to the printer and M500 to save them.

Skew Adjustments

Despite being a more complex calculation, skew is quite simple to implement once it has been evaluated as the calculator does all the hard work for you. Marlin is slightly more difficult as firmware adjustment and compiling may be needed.

Skew adjustment calculations are based on the fact that for a given perfect square with side length x, the diagonal y, across that perfect square must be: $y = x \times 2\sqrt{2}$. This is why you see 70.71 occur quite often. Don't worry about that though, the calculator deals with all this for you.

To implement the fix you can simply follow the instructions for your firmware.

For Klipper, you'll enable skew correction and restart, then send the calibrated values via console, save the profile, and then add commands to load and clear the profile when printing. Again, this is all shown on the calculator.

For Marlin there are three options as they have two methods for firmware and one for G-code. Both firmware versions should produce the same results, but some rounding errors can make them different. My current recommendation is to use the first method of adding four new lines to your firmware. If you have Skew_correction_gcode enabled in firmware already you can use the simpler G-code correction method but if you need to change firmware anyway, one of the firmware versions may be just as easy.

Fix Skew

Note: Because of the way excel works, you may find "," and "." get switched for your regional language settings.

Klipper G Code Fix

Add	[skew_correction]	*to printer.cfg*
Send Command	SET_SKEW XY=100,100,70.71	*via console*
Send Command	SKEW_PROFILE SAVE=my_skew_profile	*via console*
Add	SKEW_PROFILE LOAD=my_skew_profile	*to end of start G code*
Add	SET_SKEW CLEAR=1	*to start of end G code*

Marlin Firmware Adjustment

Add	if ENABLED(SKEW_CORRECTION)	*to firmware*
Add	define XY_DIAG_AC 100	*to firmware*
Add	define XY_DIAG_BD 100	*to firmware*
Add	define XY_SIDE_AD 70.7107	*to firmware*

Marlin Firmware Adjustment (alternative)

Add	if ENABLED(SKEW_CORRECTION)	*to firmware*
Add	define XY_SKEW_FACTOR 0	*to firmware*

Marlin G-Code Adjustment

Ensure	#define SKEW_CORRECTION_GCODE	*in firmware*
Send Command	M852 I0	*via console*
Send Command	M500	*via console*

RepRap Firmware Adjustment

Add	M556 S100 X0	*to config.g*

Figure 17: Skew adjustment tools.

RepRap firmware is the easiest to adjust, simply add the M556 command to your configuration file with the variables shown in the calculator. You can just copy and paste the box.

Bambu Firmware

Warning: Bambu Labs have warned that their implementation of skew correction is not fully tested and may have undesired results.

To add skew compensation		
Add	M1005 X100 Y100	*to end of start G code*
Add	M500	*to end of start G code*
Save as new printer such as appended with "skew g code"		
Run one print		
If ok	Go back to stock printer profile	
If not ok	Update M1005, reprint	*in start G code*
If you need to reset skew		
Add	M1005 I0	*to end of start G code*
Add	M500	*to end of start G code*
Run one print		
Remove	above commands	*from start G code*

For Bambu Labs printers, there doesn't seem to be any true documentation on what g-code commands are supported so I've only been able to confirm that this works on the X1C so far. In addition, this g-code is currently undergoing testing by Bambu Labs so you may find some undesired results. I have personally found serious problems, but only when the skew is large, like greater than 1 degree, so this shouldn't impact most of your printing.

The implementation for Bambu is similar to how you would send commands to marlin, except that Bambu Labs do not current allow this kind of direction command sending so it has to be added via the start Gcode, but most importantly you must remove it after its been read once since the command ADDS to the current skew so if you repeat the command the skew compensation will also increase. If you have problems and need to restart, send the M1005 I0 command to fully reset to zero.

There may be circumstances that you get very close to zero error, but your results still show large deviation from the target value. This means that there are other problems that should be addressed. Either your printer is not able to accurately reproduce the same dimension resulting in uneven walls, your slicer has a setting which is expanding or contacting walls, or the amount of filament you're extruding is incorrect resulting in extra thick, or extra thin walls. As I said at the start, your printer needs to be working pretty well before using Califlower.

This calculator works to ensure that the centre of the line drawn by the nozzle is in the correct position, making it somewhat independent of the amount of filament extruded. If you are over extruding very thick walls, the nozzle may still be in the right place, but your inner and outer dimensions will still be incorrect.

For more detailed information on correction, check the skew correction pages for RepRap Firmware, Marlin Firmware and Klipper Firmware to identify how to implement these changes.

Always reprint this calibration part after making changes to validate they have taken effect.

Happy printing!

FAQ

1. When I open the calculator file it asks for a password
    a. A password is only needed to access the hidden parts of the file, not to open it. If your software is asking for a password to open, you may be using the wrong file. For example, if you use excel, use the excel version, if you use open source software (such as libre office), use the file labelled 'OS'.
2. How do I run these multiple times in a row to improve results over time?
    a. This is not currently supported with Califlower, but you also shouldn't need to do it since you can get very good results with just one run. Nevertheless, this is a feature we are looking to add in the future.
3. I have a large printer, can I print it really big?
    a. In theory, yes, you can print it as large as you like but it's intended for 80-150%. Outside that region the design is less optimal. We are looking into creating a range of sizes for larger printers. Remember though, you also need callipers to match the size you print and large callipers get expensive quickly so bear that in mind.
4. Do I have to reset skew and scale settings before starting?
    a. Yes, since Califlower doesn't currently support iterative calculations you would need to set things to zero before starting.