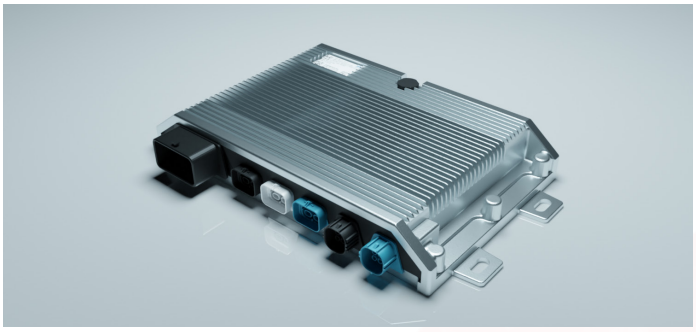

¾ view

DESCRIPTION

NeuralPlex is a central compute ECU that integrates system control and consolidates major cockpit related features into a single ECU. In-Vehicle Infotainment, telematics, audio, gauge cluster, vision, connectivity (Ethernet, WiFi, Bluetooth, Cellular, GPS), multiple displays with support for phone projection (Android Auto, Apple CarPlay).

TECHNICAL DATA

Housing	Die cast alluminum alloy
Connector	**Main** - Molex 5007620481 **USB 3.0** - JAE MX62010HQ1 **USB 2.0** - JAE MX49004HQ1 **Ethernet** - Rosenberger E6S24D-40MT5 Ethernet (1000BASE-TX) Automotive Ethernet (100BASE-T1) FDP-Link Display **HDMI Type E** - JAE MX50019NQ1 **Camera** - Rosenberger AMS24D-40MZ5 Camera 1-4 Camera 5-8 **Antenna** - FA1-NxRP-PCB-8 Radio Antenna (optional) Cellular Antenna (optional) WiFi/BT Antenna (optional) GNSS Antenna
Main Processor	**NXP i.Mx8 Quad Max** - with eight cores (two Arm® Cortex®-A72, four Arm Cortex®-A53, and two Arm Cortex®-M4F), dual 32-bit GPU subsystems, 4K H.265 capable VPU or **NVIDIA Jetson Xavier NX -** with AI Performance of 21 TOPS, 384-core NVIDIA Volta™ architecture GPU with 48 Tensor Cores, 1100MHz GPU Max Frequency, 6-core NVIDIA Carmel Arm®v8.2 64-bit CPU with 6MB L2 + 4MB L3, 1.9GHz CPU Max Frequency, 2x NVDLA Accelerator, 2x PVA Vision Accelerator.
Co-Processor	**NXP S32K148** for watchdog, analog inputs, and CAN functions. CAN ready in < 0.5s from cold boot

REGULATORY APPROVALS AND TESTING

CE conformity	TBD
E1 label	TBD
E1 approval	TBD
Electrical tests	TBD

SOFTWARE/PROGRAMMING

Operating System	**Embedded Linux**
Programming System	**Qt 6.5.2**

OPTIONAL FEATURES

- WiFi/BT
- Cellular
- AM/FM Radio
- Camera Inputs
- SSD
- CPU - i.MX8QM or NVIDIA Jetson
- External Display Support

©MRS Electronic Inc

TECHNICAL DATA CONTD

Inputs	**4 Analog Inputs** - Selectable Range 0–11V / 0–21.4V Can be used as 0–20mA inputs 12-bit resolution **8 GMSL Camera Inputs** **4 Mic Inputs**
Outputs	**4 PWM Out** - up to 2.5A each 10 Hz - 1 kHz **1 Voltage Reference Out (0-10V)** **3 Stereo Line Level Audio Outputs** **1 Stereo Speaker Level Audio Output (30W)** **1 HDMI Type E Output** **4 FDP-Link III Video Outputs** (4x 720p or 2x 720p + 1x 1080p)
Camera Inputs (optional)	**Quad 1.5Gbps GMSL Deserializer** with Coax Input Stream Full HD @ 30 fps **4 Cameras usable for functional safety applications**
Interfaces	**4 CAN** (CAN-FD capable) **1 LIN** **1 1000Base-TX Ethernet** **4 100Base-T1 Ethernet** **2 USB 3.0** **1 USB 2.0** **1 RS232**
Sensors	**Accelerometer** - 3-axis, ±2/±4/±8/±16 g acceleration range. Selectable full scales **Gyroscope** - 3-axis, ±125/±245/±500/±1000/±2000 dps angular range. Selectable full scales **Real Time Clock** - Onboard RTC powered by a supercapacitor to keep track of time while unit is powered off **Barometric Pressure** - 300–1200 hPa ± 0.002 hPa **Temperature** - -40–85 °C ± 0.5°C
Storage	**M.2 SSD** (optional) - M.2 2242-D5-B-M Key standard factor **Micro SD Slot** **SATA 3 or PCIE Gen 3 x2 Lane interface**
External Screen Options (optional)	**7"** **10.1"** **12.3"** **15.6"**
External Screen Functions	**Brightness Control** **Multi-Touch Touchscreen** **Physical Buttons**

Connectivity	**WiFi/Bluetooth (optional) -** 802.11 a/b/g/n/ac WLAN, dual-mode Bluetooth 5.2 BLE device M.2 2230 E-Key standard factor, USB interface **Cellular (optional) -** nanoSim + eSIM **GPS -** Standard precision GNSS module with concurrent reception of up to four GNSS (GPS, GLONASS, BeiDou, Galileo) **AM/FM Radio (optional)** **USB** **Ethernet**
Operating voltage	**9–32V**
Functional Safety	**ASIL-B**
Weight	TBD
Housing Dimensions	**252mm x 160m x 44mm**
Temperature Range	**-40°C–85°C**
Environmental Protection	**IP65**
Current consumption	TBD
Quiescent current	TBD
Over-Current Protection	**Yes**
Short Circuit Protection	**Yes**
Reverse Polarity Protection	**Yes**
Baudrate	**60 kbps ...5000 kbps** (CAN FD capability on all 4 CAN Buses) default: 250 kbps

©MRS Electronic Inc

7" DISPLAY

Screen Size (Diag.)	7”
Display Type	16.7M color TFT
Viewing Angle	θL = 75° θR = 75° θT = 70° θB = 75°
Viewing Direction	All Direction
TFT Resolution	1024 x 600 (RGB)
Luminance	900 NITS
Contrast Ratio	560:1
Touch Mode	Multi Touch

10.1" DISPLAY

Screen Size (Diag.)	10.1"
Display Type	16.7M color TFT
Viewing Angle	θL = 85° θR = 85° θT = 85° θB = 85°
Viewing Direction	All Direction
TFT Resolution	1280 x 800 (RGB)
Luminance	850 NITS
Contrast Ratio	800:1
Touch Mode	Multi Touch

12.3 DISPLAY

Screen Size (Diag.)	12.3"
Display Type	16.7M color TFT
Viewing Angle	θL = 80° θR = 80° θT = 80° θB = 80°
Viewing Direction	All Direction
TFT Resolution	1920 x 720 (RGB)
Luminance	1000 NITS
Contrast Ratio	1000:1
Touch Mode	Multi Touch

15.6" DISPLAY

Screen Size (Diag.)	15.6"
Display Type	16.7M color TFT
Viewing Angle	θL = 80° θR = 80° θT = 80° θB = 80°
Viewing Direction	All Direction
TFT Resolution	1920 x 1080 (RGB)
Luminance	850 NITS
Contrast Ratio	1200:1
Touch Mode	Multi Touch

SUBJECT TO CHANGE
PRELIMINARY VERSION
DO NOT USE

CONNECTORS & MATING CONNECTORS

Connector	**Mating Connector**
Main - Molex 5007620481	Molex 643203311*
USB 3.0 - JAE MX62010HQ1	MX62010FQ1
USB 2.0 - JAE MX49004HQ1	MX49004FQ1
Ethernet - E6S24D-40MT5 - A : 100BASE-T1	E6K14D-1CAZ5-A
Ethernet - E6S24D-40MT5 - B : 1000BASE-TX	E6K14D-1CAZ5-B
Ethernet - E6S24D-40MT5 - C : FPD Link	E6K14D-1CAZ5-C
HDMI Type E - JAE MX50019NQ1	MX50019FQ1
Cameras 1-4 - AMS24D-40MZ5-Z	AMK148-102Z5-Z
Cameras 5-8 - AMS24D-40MZ5-A	AMK148-102Z5-A
Radio Antenna - FA1-NBRP-PCB-8	FA1-NBSJ-C01-0
Cellular Antennas (GSM and Diversity) - FA1-NBRP-PCB-8	FA1-NBSJ-C01-0
WiFi/BT Antennas - FA1-NCRP-PCB-8	FA1-NCSJ-C01-0
GNSS Antenna - FA1-NCRP-PCB-8	FA1-NCSJ-C01-0

*Cable should exit to the right

PRELIMINARY VERSION

DO NOT USE

PIN ASSIGNMENT - MAIN MOLEX 5007620481

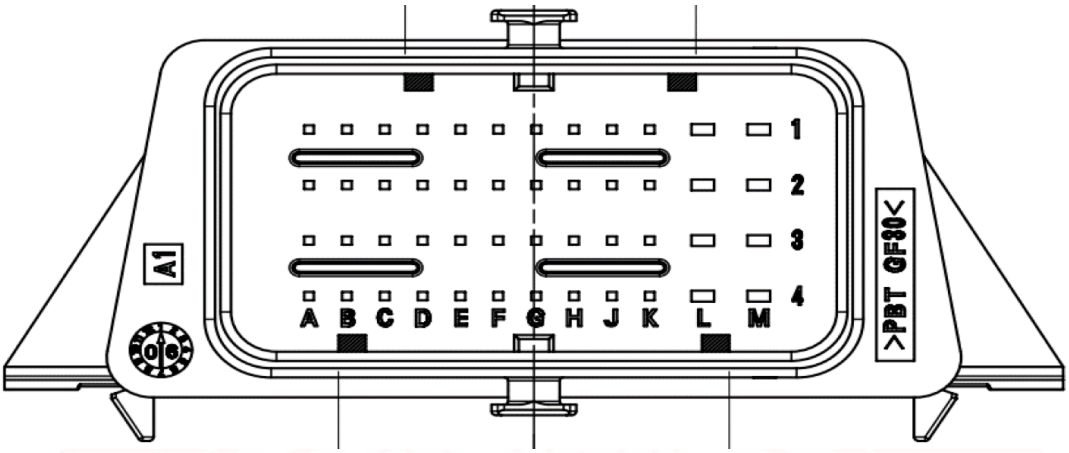

Pin	Function	Pin	Function	Pin	Function	Pin	Function
A1	PWM_OUTPUT_3	B1	PWM_OUTPUT_4	C1	LINE_OUT3_LEFT	D1	LINE_OUT2_LEFT
A2	PWM_OUTPUT_2	B2	LINE_OUT3_RIGHT	C2	LINE_OUT3_GND	D2	LINE_OUT2_GND
A3	PWM_OUTPUT_1	B3	ANA_IN_2	C3	ANA_IN_3	D3	IGNITION
A4	CAN0_L	B4	CAN0_H	C4	CAN1_L	D4	CAN1_H

Pin	Function	Pin	Function	Pin	Function	Pin	Function
E1	GND	F1	GND	G1	MIC_IN_3	H1	MIC_IN_4
E2	LINE_OUT2_RIGHT	F2	LINE_OUT1_RIGHT	G2	LINE_OUT1_LEFT	H2	LINE_OUT1_GND
E3	ANA_IN_1	F3	ANA_IN_4	G3	nc	H3	nc
E4	CAN3_L	F4	CAN3_H	G4	CAN2_L	H4	CAN2_H

Pin	Function	Pin	Function	Pin	Function	Pin	Function
J1	nc	K1	VREF_OUT	L1	KL30	M1	KL30
J2	MIC_IN_1	K2	MIC_IN_2	L2	GND	M2	RIGHT_SPEA-KER_OUT+
J3	RS232_RXD	K3	LIN	L3	GND	M3	RIGHT_SPEA-KER_OUT-
J4	RS232_TXD	K4	LEFT_SPEAKER_OUT+	L4	LEFT_SPEAKER_OUT-	M4	POWER_AMP

 ©MRS Electronic Inc

PIN ASSIGNMENT - ROSENBERGER E6S24D-40MT5-B

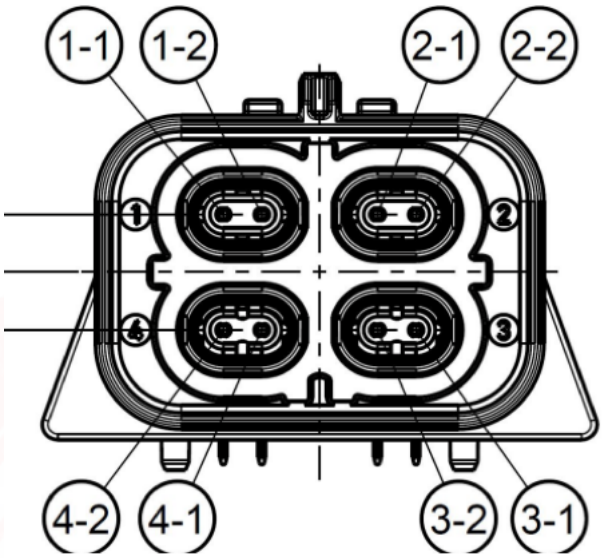

1000BASE-TX			
Pin	**Function**	**Pin**	**Function**
1-1	TRX0-	3-1	TRX3+
1-2	TRX0+	3-2	TRX3-
2-1	TRX1-	4-1	TRX2+
2-2	TRX1+	4-2	TRX2-

100BASE-T1*			
Pin	**Function**	**Pin**	**Function**
1-1	TRX1+	3-1	TRX4-
1-2	TRX1-	3-2	TRX4+
2-1	TRX2+	4-1	TRX3-
2-2	TRX2-	4-2	TRX3+

* (4X 100BASE-T1)

FDP LINK III DISPLAY OUTPUTS*			
Pin	**Function**	**Pin**	**Function**
1-1	DOUT1-	3-1	DOUT4+
1-2	DOUT1+	3-2	DOUT4-
2-1	DOUT3-	4-1	DOUT0+
2-2	DOUT3+	4-2	DOUT0-

* FPD LINK III is able to drive up to 4x 720p or 1x 1080P (DOUT0+DOUT1) + 2x 720p Displays (DOUT2/DOUT3)

 ©MRS Electronic Inc

PIN ASSIGNMENT - ROSENBERGER AMS24D-40MZ5

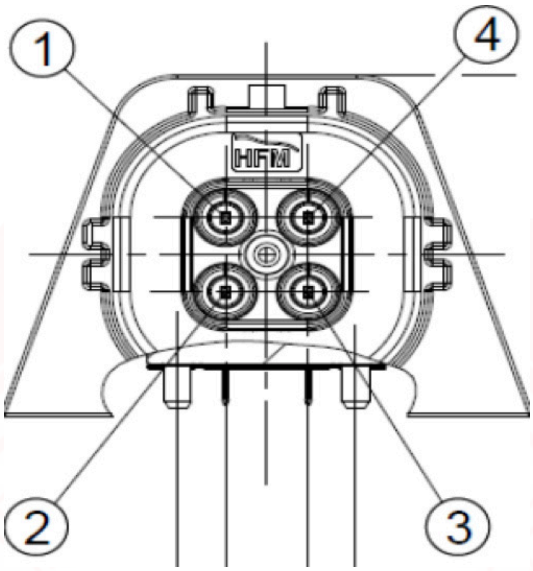

CAMERA GMSL INPUTS*	
Pin	**Function**
1	GMSL0
2	GMSL1
3	GMSL2
4	GMSL3

* Expandable up to 8x Camera inputs with a 2nd connector

 ©MRS Electronic Inc

BLOCK FUNCTION DIAGRAM

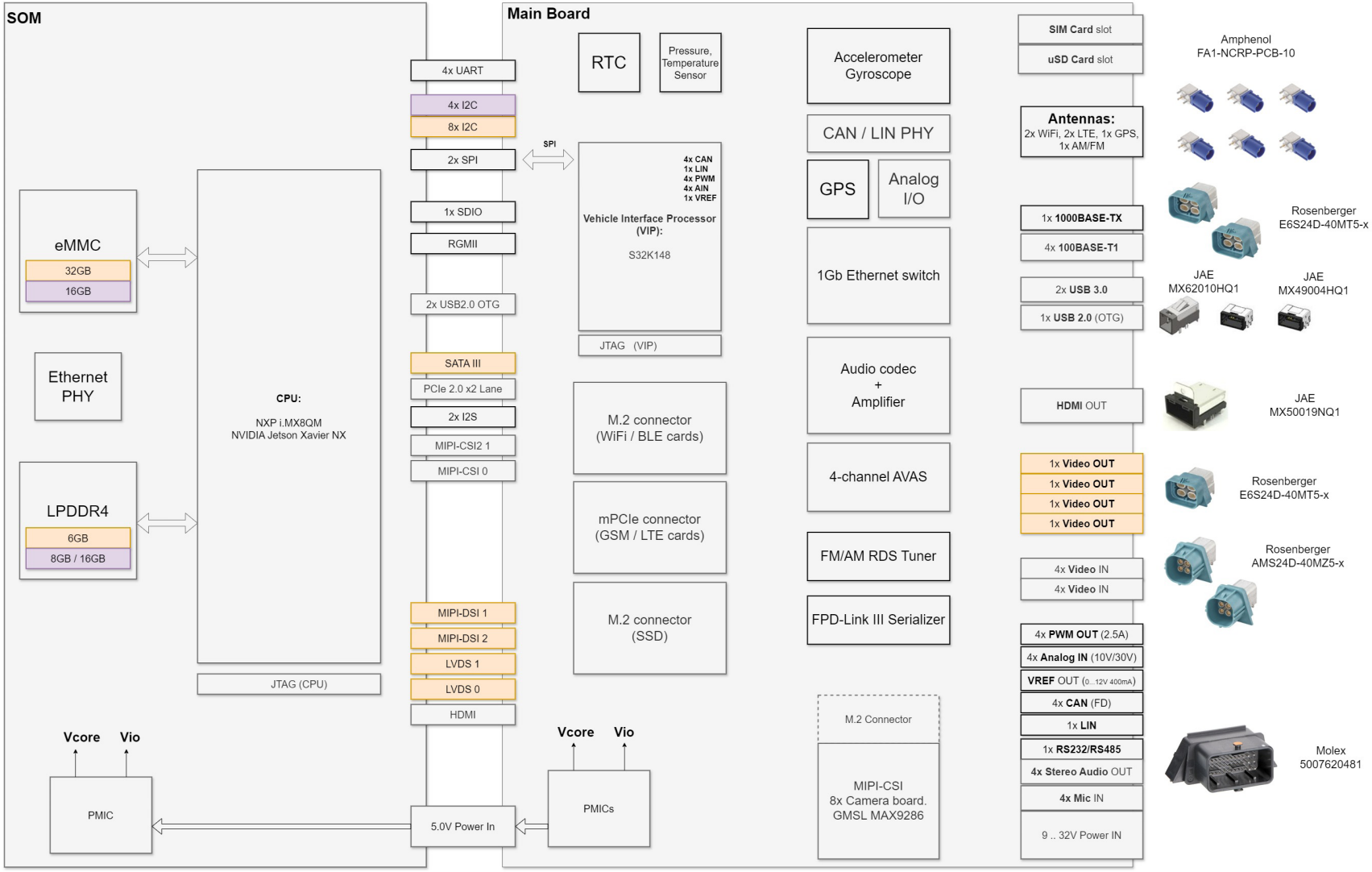

©MRS Electronic Inc

NEURALPLEX TECHNICAL DRAWINGS (IN MM)

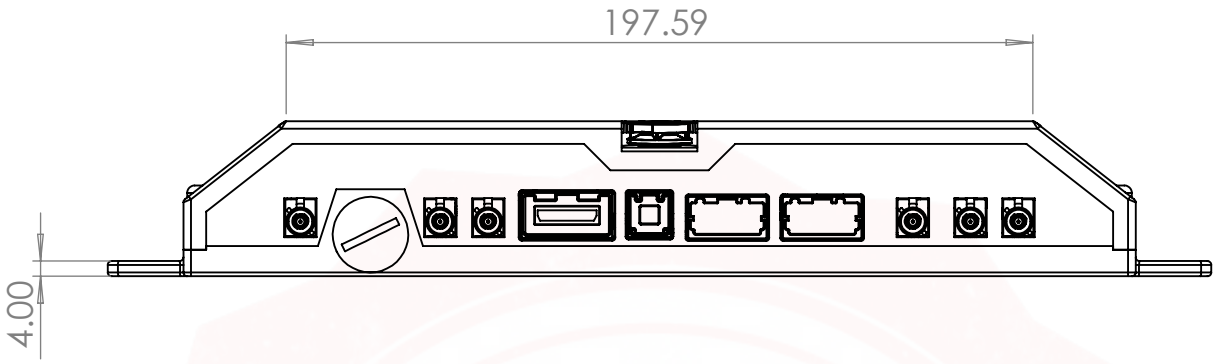

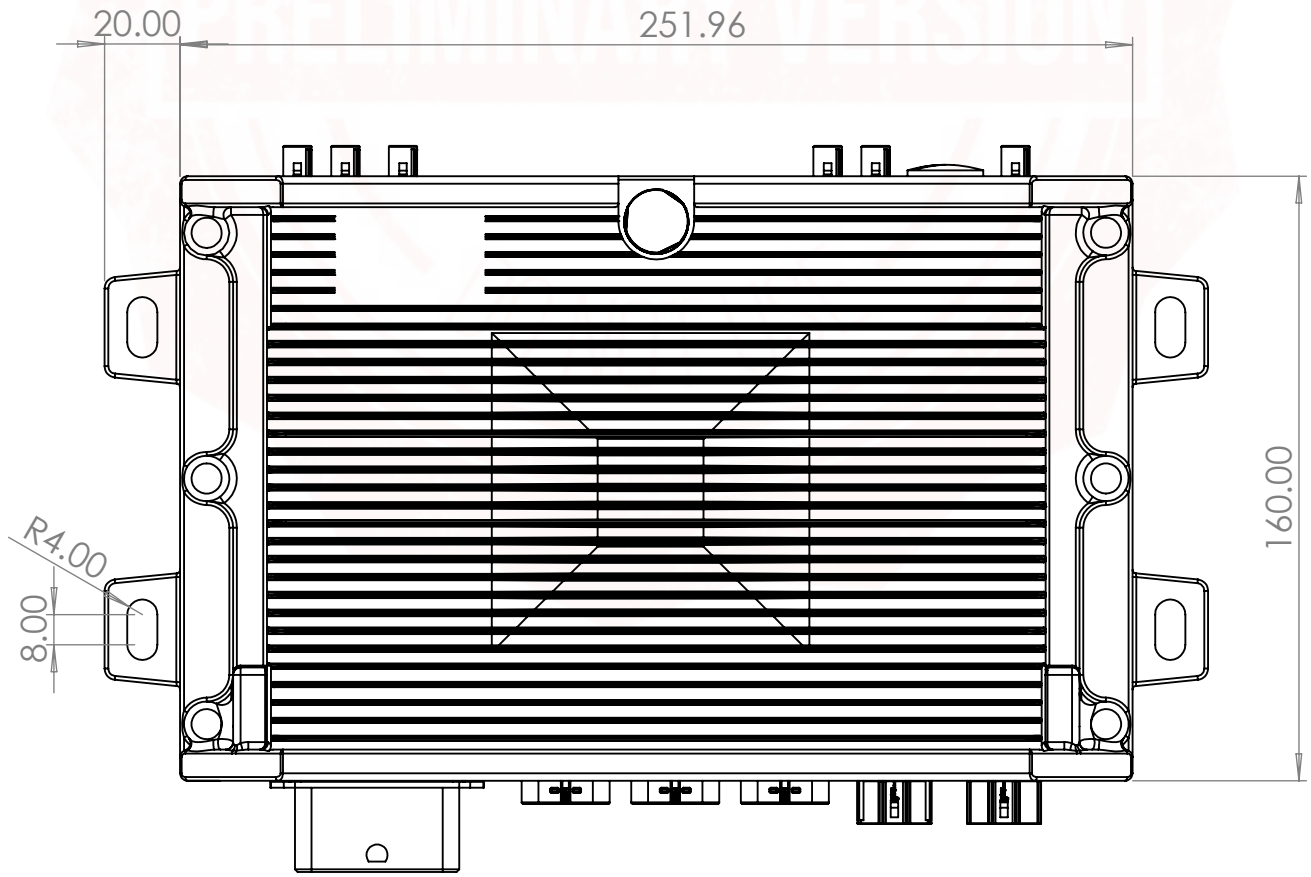

SUBJECT TO CHANGE
PRELIMINARY VERSION

NEURALPLEX TECHNICAL DRAWINGS (IN MM)

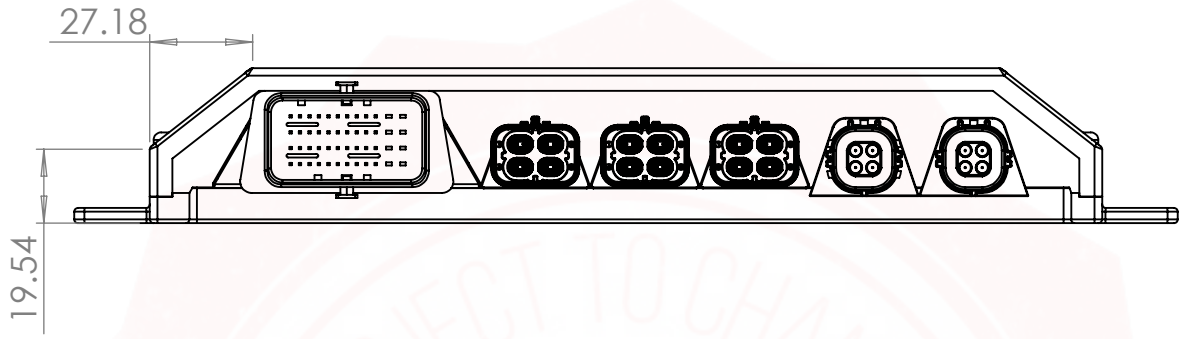

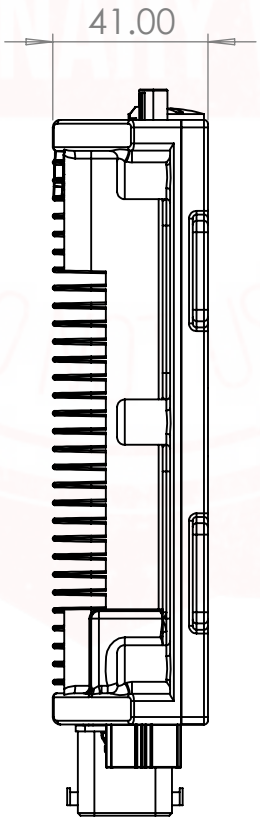

SUBJECT TO CHANGE
PRELIMINARY VERSION
DO NOT USE

15.6" EXTERNAL SCREEN OPTION TECHNICAL DRAWING (IN MM)

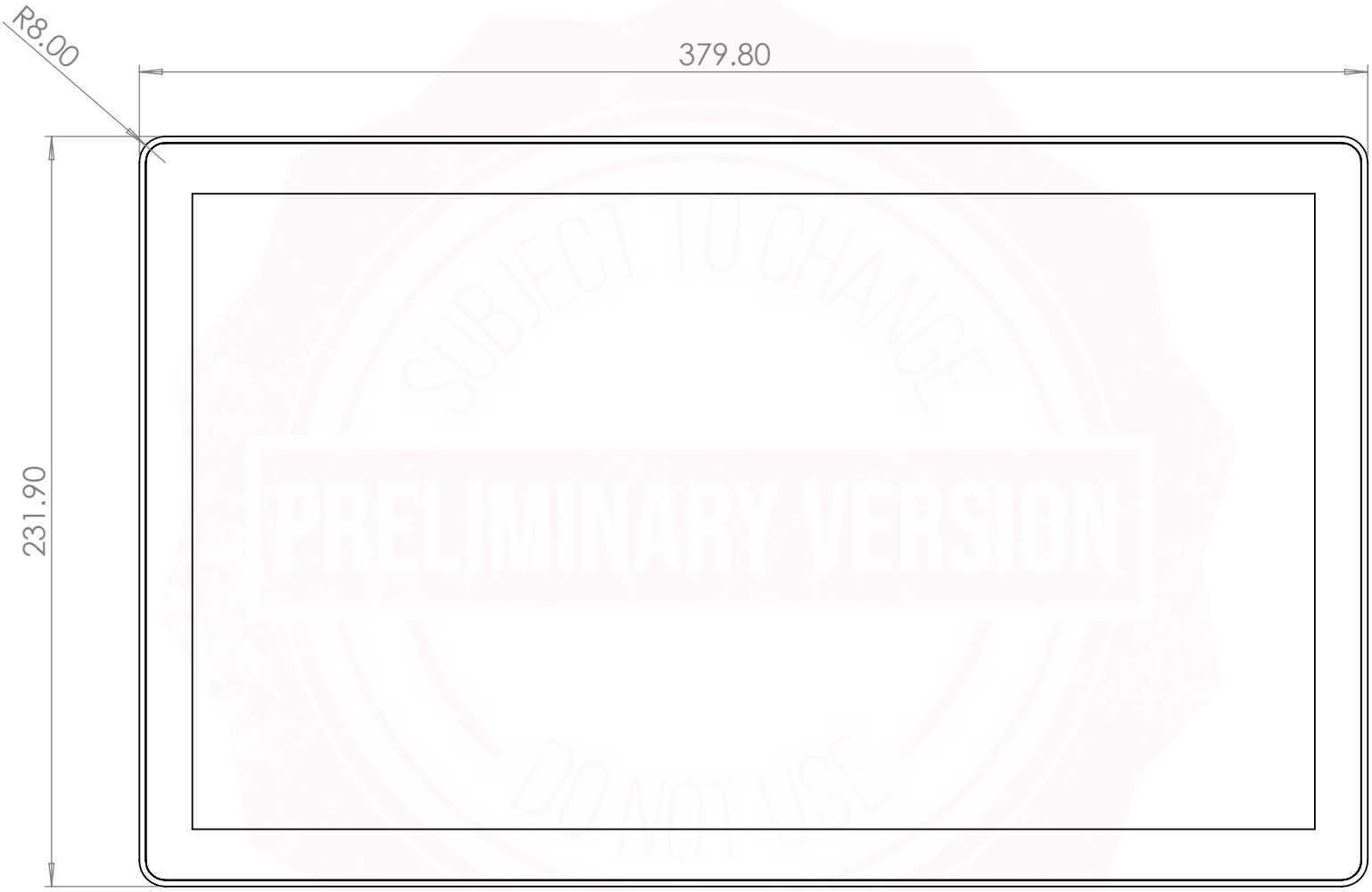

SUBJECT TO CHANGE
PRELIMINARY VERSION
DO NOT USE

15.6" EXTERNAL SCREEN OPTION TECHNICAL DRAWING (IN MM)

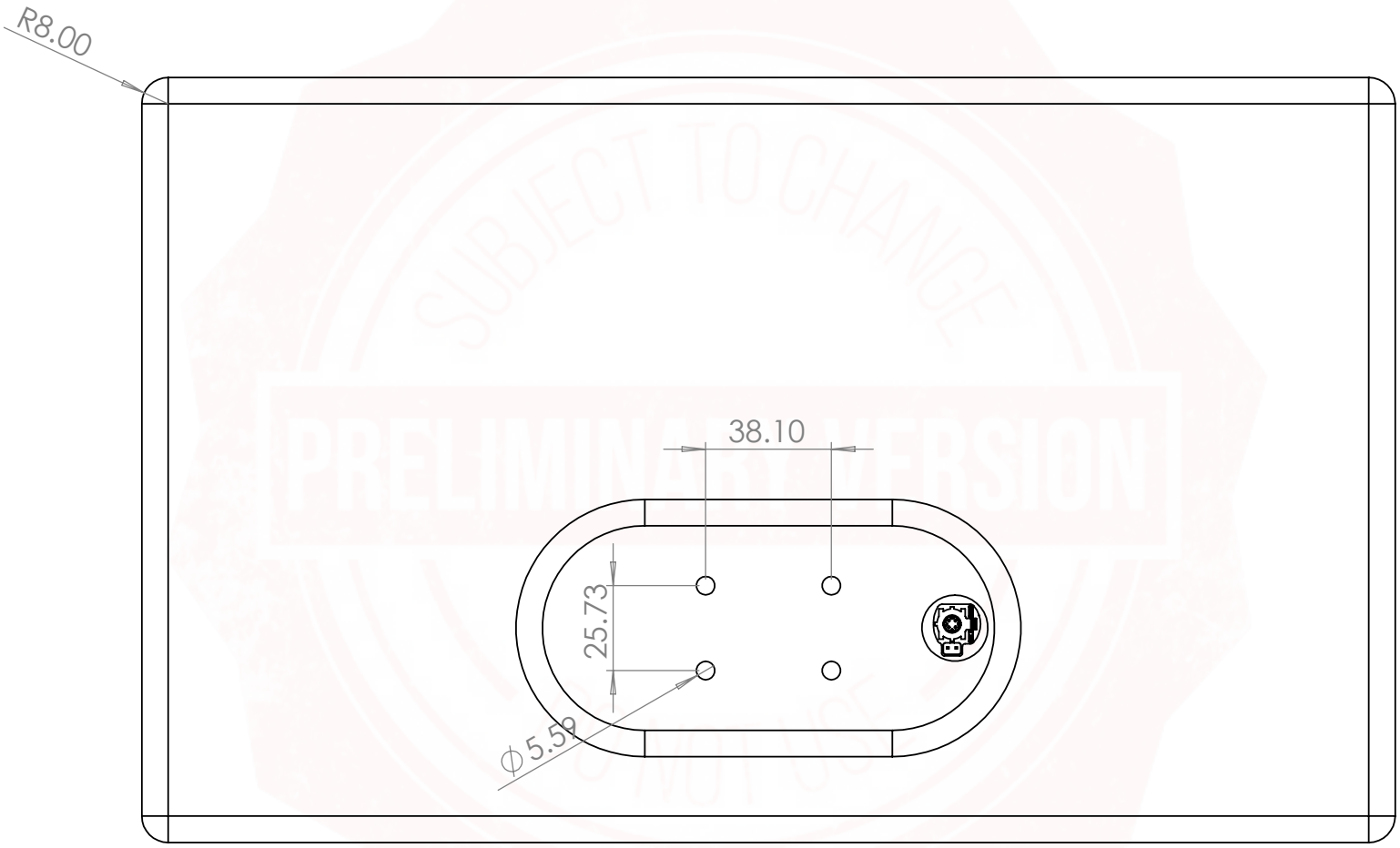

 ©MRS Electronic Inc

15.6" EXTERNAL SCREEN OPTION TECHNICAL DRAWING (IN MM)

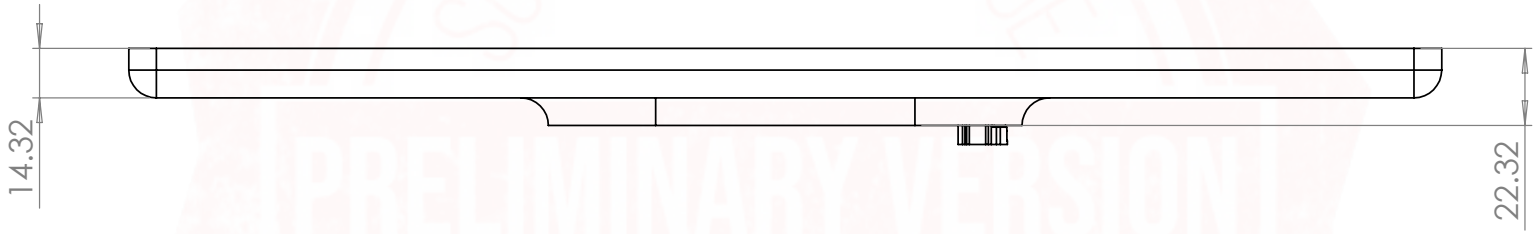

SUBJECT TO CHANGE
PRELIMINARY VERSION
DO NOT USE

12.3" EXTERNAL SCREEN OPTION TECHNICAL DRAWING (IN MM)

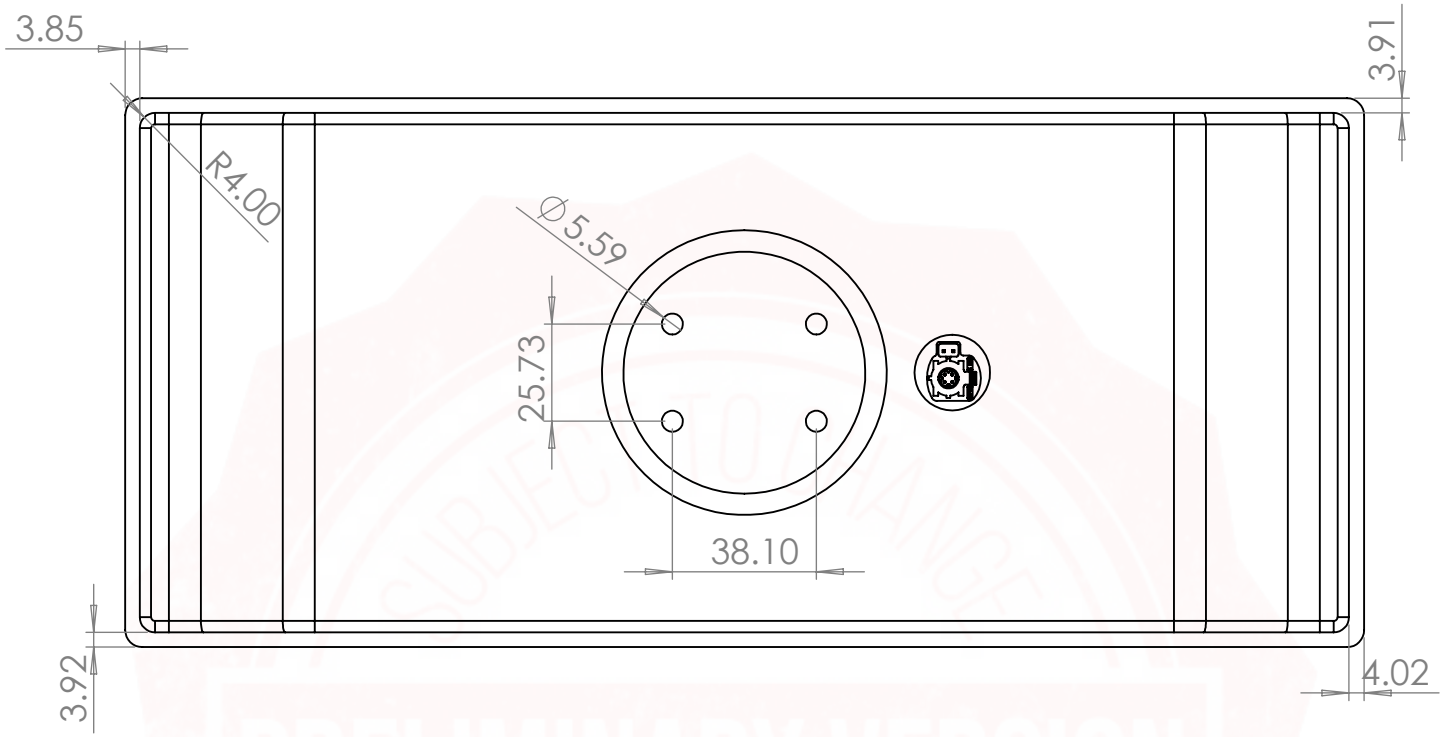

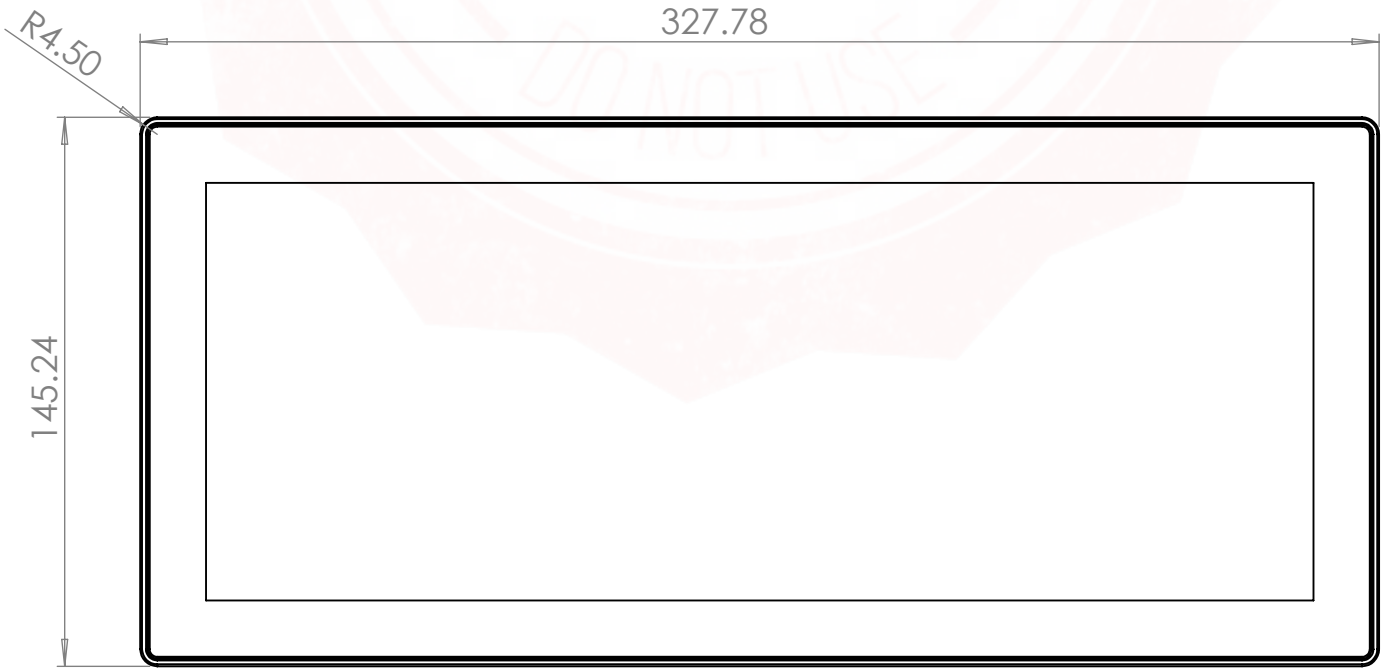

 ©MRS Electronic Inc

12.3" EXTERNAL SCREEN OPTION TECHNICAL DRAWING (IN MM)

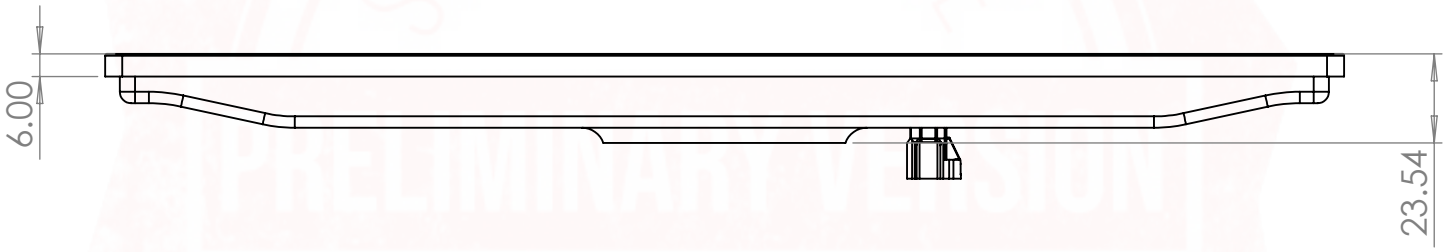

SUBJECT TO CHANGE
PRELIMINARY VERSION
DO NOT USE

10.1" EXTERNAL SCREEN OPTION TECHNICAL DRAWING (IN MM)

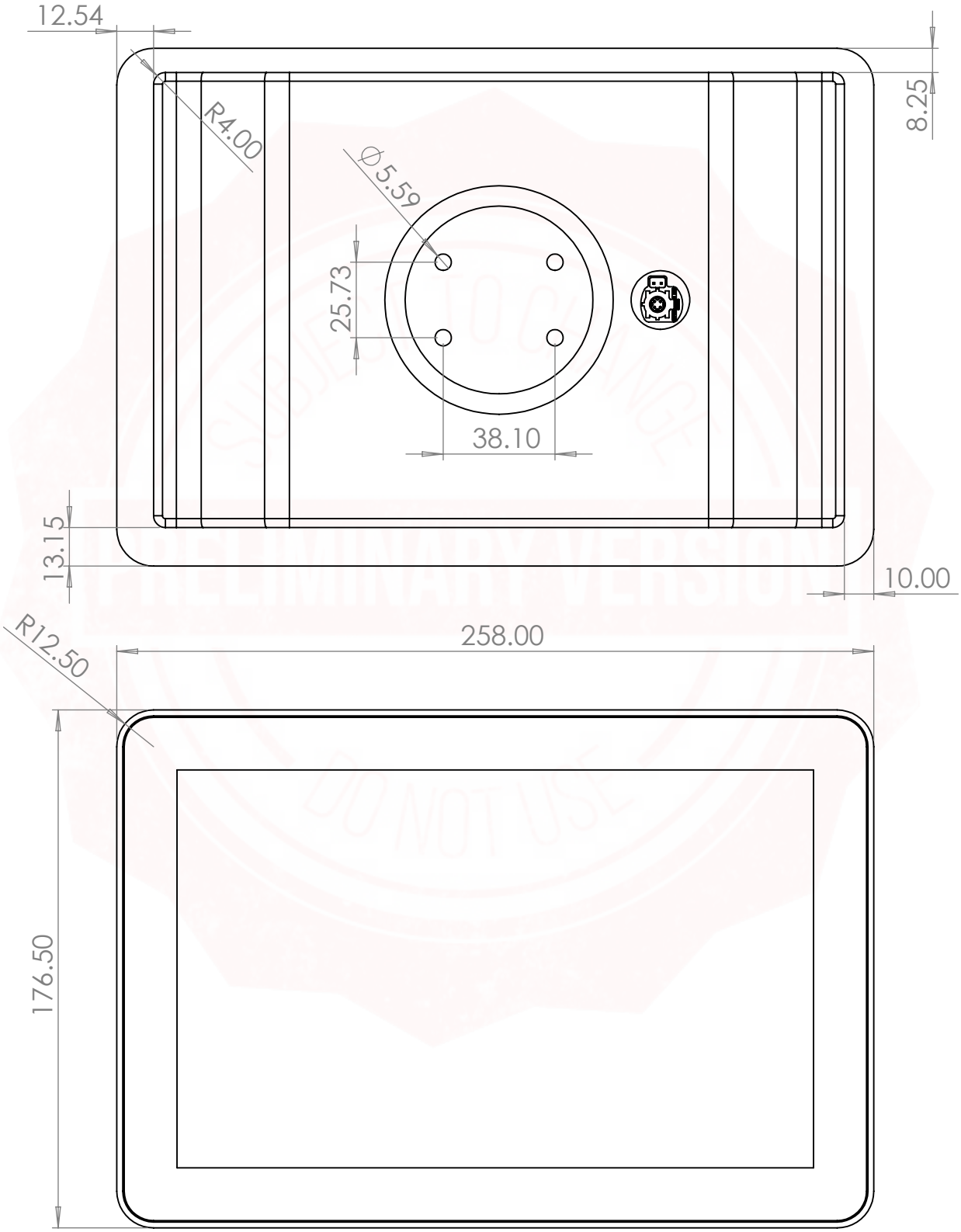

 ©MRS Electronic Inc

10.1" EXTERNAL SCREEN OPTION TECHNICAL DRAWING (IN MM)

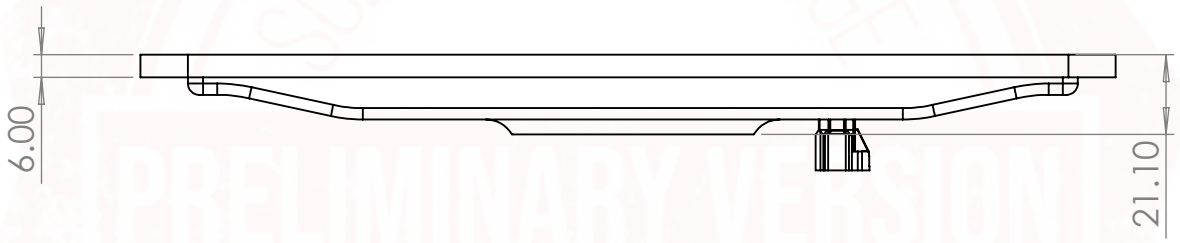

SUBJECT TO CHANGE
PRELIMINARY VERSION
DO NOT USE

7" EXTERNAL SCREEN OPTION TECHNICAL DRAWING (IN MM)

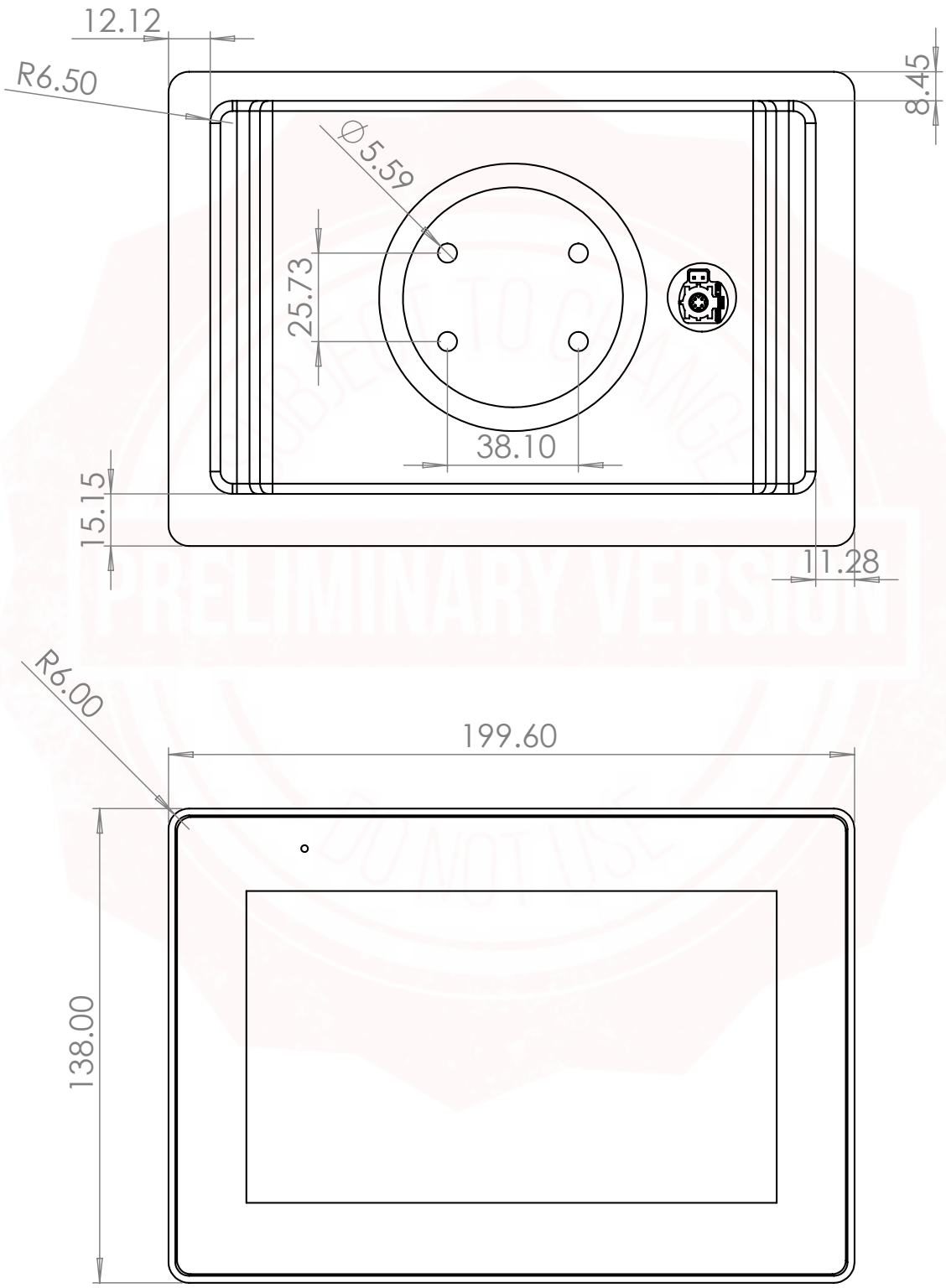

 ©MRS Electronic Inc

7" EXTERNAL SCREEN OPTION TECHNICAL DRAWING (IN MM)

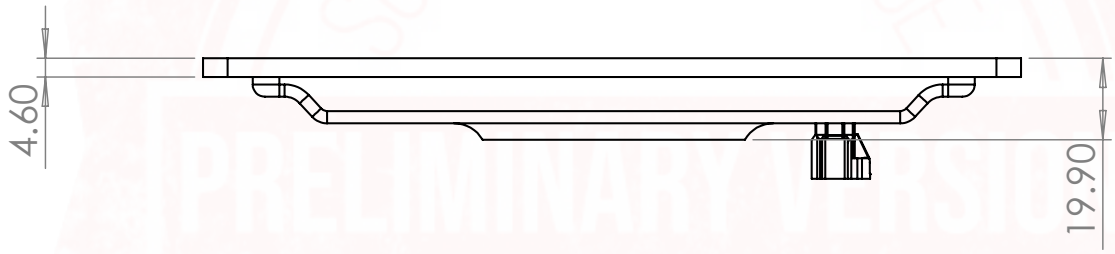

SUBJECT TO CHANGE
PRELIMINARY VERSION
DO NOT USE

NOTES ON WIRING AND CABLE ROUTING

Higside outputs may only be switched to ground.

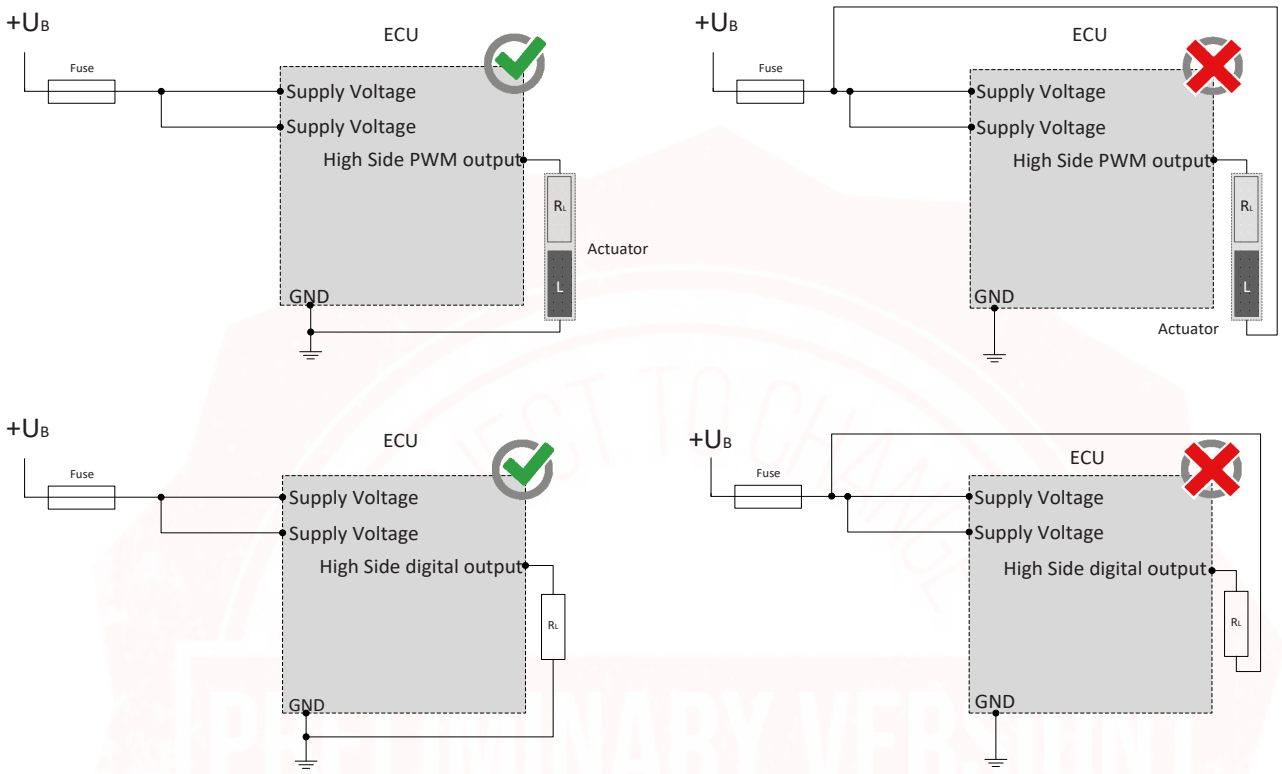

The sensor supplies can be “lifted” through an external circuitry, for example the creation of higher voltage, as they only work as a voltage source but not as voltage drain. The lift of a voltage source may lead to unforeseen malfunctions and damages of the control unit in case of permanent operation.

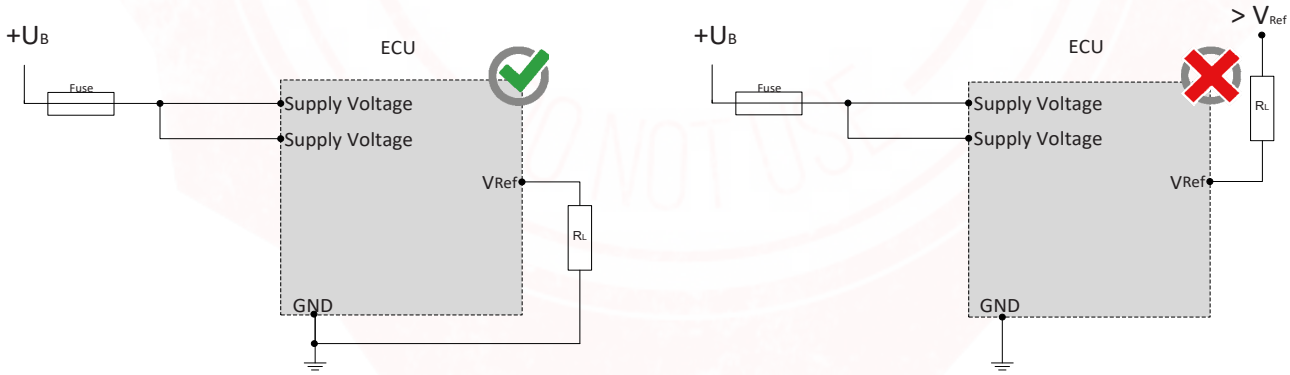

CAN bus communication is the main communication between the control unit and the vehicle. Therefore, connect the CAN bus with special care and check the correct communication with the vehicle to avoid undesired behavior.

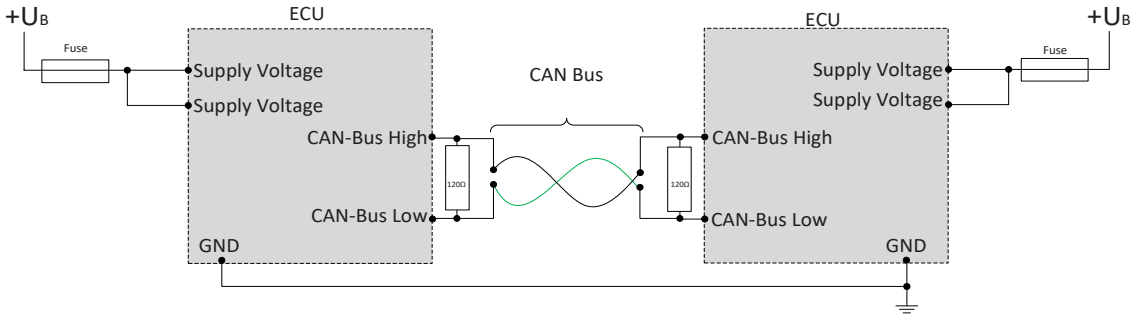

 ©MRS Electronic Inc

SAFETY AND INSTALLATION INFORMATION

It is essential to read the instructions in full thoroughly before working with the device.

Please note and comply with the instructions in the operating instructions and the information in the device data sheet, see www.mrs-electronics.com

Staff qualification: Only staff with the appropriate qualifications may work on this device or in its proximity.

SAFETY

WARNING! Danger as a result of a malfunction of the entire system.
Unforeseen reactions or malfunctions of the entire system may jeopardise the safety of people or the machine.

- Ensure that the device is equipped with the correct software and that the wiring and settings on the hardware are appropriate.

WARNING! Danger as a result of unprotected moving components.
Unforeseen dangers may occur from the entire system when putting the device into operation and maintaining it.

- Switch the entire system off before carrying out any work and prevent it from unintentionally switching back on.
- Before putting the device into operation, ensure that the entire system and parts of the system are safe.
- The device should never be connected or separated under load or voltage.

CAUTION! Risk of burns from the housing.
The temperature of the device housing may be elevated.

- Do not touch the housing and let all system components cool before working on the system.

PROPER USE

The device is used to control or switch one or more electrical systems or sub-systems in motor vehicles and machines and may only be used for this purpose. The device may only be used in an industrial setting.

WARNING!Danger caused by incorrect use.
The device is only intended for use in motor vehicles and machines.

- Use in safety-related system parts for personal protection is not permitted.
- Do not use the device in areas where there is a risk of explosion.

Correct use:

- operating the device within the operating areas specified and approved in the associated data sheet.
- strict compliance with these instructions and no other actions which may jeopardise the safety of individuals or the functionality of the device.

Obligations of the manufacturer of entire systems

It is necessary to ensure that only functional devices are used. If devices fail or malfunction, they must be replaced immediately.

System developments, installation and the putting into operation of electrical systems may only be carried out by trained and experienced staff who are sufficiently familiar with the handling of the components used and the entire system.

It is necessary to ensure that the wiring and programming of the device does not lead to safety-related malfunctions of the entire system in the event of a failure or a malfunction. System behaviour of this type can lead to a danger to life or high levels of material damage.

The manufacturer of the entire system is responsible for the correct connection of the entire periphery (e.g. cable cross sections, correct selection/connection of sensors/actuators).

Opening the device, making changes to the device and carrying out repairs are all prohibited. Changes or repairs made to the cabling can lead to dangerous malfunctions. Repairs may only be carried out by MRS.

Installation

The installation location must be selected so the device is exposed to as low a mechanical and thermal load as possible. The device may not be exposed to any chemical loads.

Install the device in such a manner that the plugs point downwards. This means condensation can flow off the device. Single seals on the cables/leads must be used to ensure that no water gets into the device.

Putting into operation

The device may only be put into operation by qualified staff. This may only occur when the status of the entire system corresponds to the applicable guidelines and regulations.

FAULT CORRECTION AND MAINTENANCE

NOTE The device is maintenance-free and may not be opened.

- If the device has damage to the housing, latches, seals or flat plugs, it must be taken out of operation.

Fault correction and cleaning work may only be carried out with the power turned off. Remove the device to correct faults and to clean it.

Check the integrity of the housing and all flat plugs, connections and pins for mechanical damage, damage caused by overheating, insulation damage and corrosion. In the event of faulty switching, check the software, switches and settings.

Do not clean the device with high pressure cleaners or steam jets. Do not use aggressive solvents or abrasive substances.