Project Report

SMART PARKING SYSTEM

Table of Contents

3. ABSTRACT:

Now days in many multiplex systems there is a severe problem for car parking systems. There are many lanes for car parking, so to park a car one must look for the all lanes. Moreover, there is a lot of men labour involved for this process for which there is lot of investment.

Hence in this project we have come up with a System which will effectively help in making the parking easy by showing the free slots. In this when you at parking site, you see the number of parking slots and available parking slots at the entry gate. it also makes the work of the security guards easy in finding the number of cars parked by showing the “cars parked:”. This happens with the help of the sensors that will detect the presence of car and hence accordingly the parking slots availability is shown. To make it more precise and easier, LEDs are used which will notify the availability of free slots. In case if there are no slots available, then red LED glows, hence notifying the absence of free slots.

4. INTRODUCTION:

Smart parking system effectively helps in making the parking easy by showing the free slots. In the project we have used 8051 microcontroller. The port P2 is used as input port to sense the presence of vehicle. In a relay, the resistor absorbs access voltage given off when the relay is activated. This will protect any other components in the circuit from voltage spikes.

An LED (Light Emitting Diode) emits light when an electric current pass through it. The simplest circuit to power an LED is a voltage source with a resistor and an LED in series. In our circuit we have used 2 LEDs Red and green. The red led will glow to indicate the absence of free slot, and green led glows to indicate the presence of the parking slot. This is interfaced with the circuit using port 3.

The output is obtained at port 1using an LCD display. This will LCD display will be displaying the free slots along with the number of parked cars, hence acting as an output through port 1 of 8051 microcontroller. We have made for 8 slots, which can be expanded to implement into reality.

So, whenever the sensor gets the input sensing the presence of a vehicle that is whenever the switch is pressed, there will be an immediate result that we will be able to see on the LCD display. The slot

will show as occupied and the cars parked will get incremented by a count of 1. the same process will continue whenever the sensors are further detected, and hence further incrementing the count by 1. Similarly, when the car leaves the parking slot the count gets decremented by 1 and immediately it will also be reflected within the availability of free slots.

Hence the entire project will be effectively useful for showing the free slots for parking along with the count value.

This project can be used for parking system in any shopping mall, multiplex 2. Can be used for industries, commercial offices and educational institutes.

- Prevents waste of manpower when it's not enough for supervision.
- This project can be used in Hospitals.
- Easy to modify as per requirement.
- Economically feasible
- Simple circuitry
- Secured data collection
- Easy error detection.

5. BLOCK DIAGRAM:

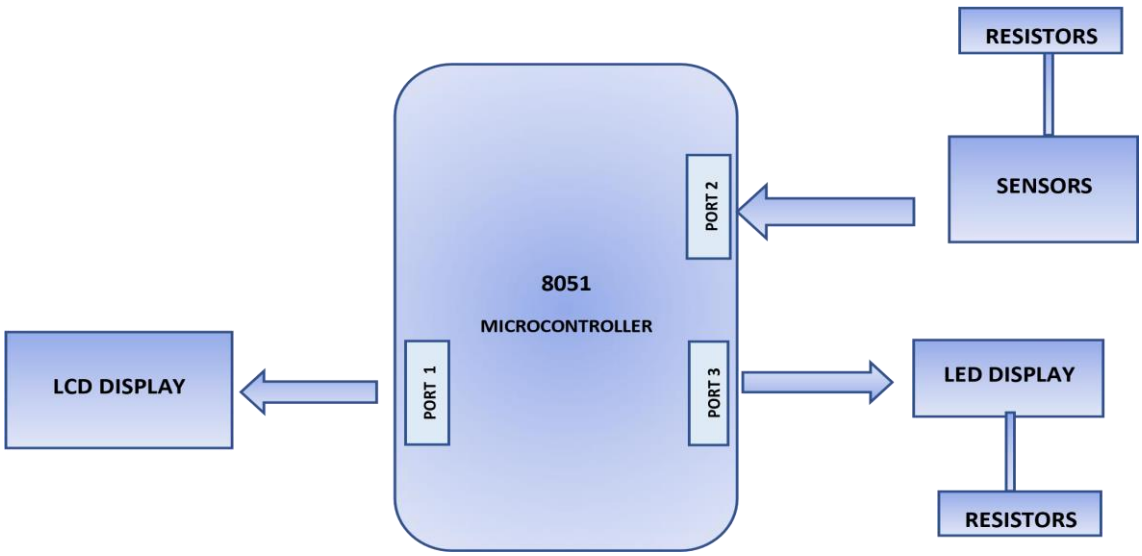

SOFTWARES USED:

- Proteus
- Keil

COMPONENTS REQUIRED:

- LCD
- Microcontroller 8051
- LED
- Resistors and capacitors
- Sensors (represented as switches)

Description of components:

MICRO CONTROLLER 8051

- 4KB on-chip program memory (ROM).
- 128 bytes on-chip data memory (RAM).
- Four register banks.
- 128 user defined software flags.
- 8-bit bidirectional data bus.
- 16-bit unidirectional address bus.
- 32 general purpose registers each of 8-bit.
- 16-bit Timers (usually 2, but may have more or less).
- Three internal and two external Interrupts.
- Four 8-bit ports, (short model have two 8-bit ports).
- 16-bit program counter and data pointer.

LCD (16x2 Module)

- Operating Voltage is 4.7V to 5.3V. Current consumption is 1mA without backlight.
- Each character is build by a 5×8 pixel box.
- Can work on both 8-bit and 4-bit mode.
- It can also display any custom generated characters.
- Available in Green and Blue Backlight.

- **Switches:**
  - Used to stop the flow of current.
- **Resistor:**
  - Used to oppose the flow of current.
  - It protects from the damage of component directly supply of pow

FLOW CHART:

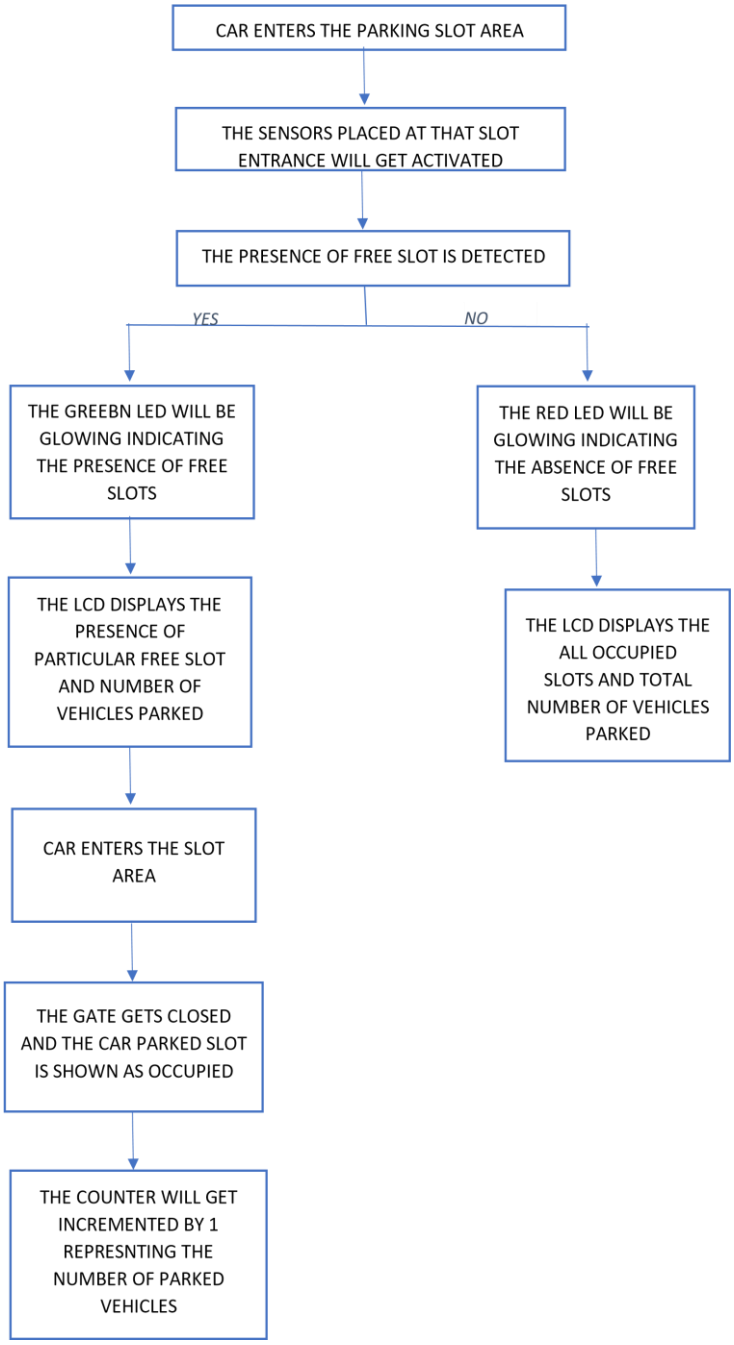

8) CODE AND APPLICATION:

ASM CODE:

```
GREEN_LED EQU P3.1
RED_LED   EQU P3.2 org
0000h
mov p1,#0h                          //make port1(LCD port) as output
MOV P2,#0FFH
clr p3.4                            //make RS pin as output  clr
p3.6                        //make E pin as output  MOV
R4,#00h                     //r1 as 8 vehicle counter
MOV R5,#00h                         //r2 for switch to 4 line
SETB RED_LED                //turn off RED LED  CLR
GREEN_LED           // turn GREEN LED  acall
delay_1s            //1s delay
MOV DPTR,#INIT_COMMANDS //Initialize LCD to 8 bit 5x7 matrix
ACALL LCD_CMD
MOV DPTR,#LINE1                     //clear screen and go to line 1 position 1
ACALL LCD_CMD
MOV DPTR,#TEXT1                     //display introduction
ACALL LCD_DISP
acall delay_1s              //4s delay
acall delay_1s acall delay_1s
acall
delay_1s
UP:MOV R5,#00h
MOV DPTR,#LINE1                             //go to line 1
ACALL LCD_CMD
MOV DPTR,#PARKED_VEHICAL            //print the vehicle count
ACALL LCD_DISP
MOV A,#0x30
ADD A,R4
ACALL write
MOV R4,#08h

MOV A,p2                            //check all slots are used or not
                    //ANL A,#0xFF
```

```
CJNE A,#0x00,SKIP          //if all slots are used then print on lcd
MOV DPTR,#LINE2
ACALL LCD_CMD
MOV DPTR,#TEXT2
ACALL LCD_DISP
CLR RED_LED                //turn off RED LED
SETB GREEN_LED   // turn GREEN LED acall
delay_1s acall delay_1s MOV R4,#08h
SJMP UP

SKIP:MOV DPTR,#LINE2 //if free slots are available then check available slots


ACALL LCD_CMD
MOV DPTR,#FREE
ACALL LCD_DISP

MOV DPTR,#LINE3
ACALL LCD_CMD
MOV A,p2                           //check s1 slot
RRC A
JNC NEXT1                           //if slot are free print slot name on lcd
SETB RED_LED               //turn off RED LED
CLR GREEN_LED              // turn GREEN LED
DEC R4
INC R5
MOV DPTR,#S1
ACALL LCD_DISP
NEXT1:MOV A,p2                     //check s2 slot
RRC A
RRC A
JNC NEXT2                           //if slot are free print slot name on lcd
SETB RED_LED               //turn off RED LED
CLR GREEN_LED              // turn GREEN LED
DEC R4
INC R5
```

```
MOV DPTR,#S2 ACALL
LCD_DISP
NEXT2:MOV A,p2                    //check s3 slot
RRC A
RRC A
RRC A
JNC NEXT3                          //if slot are free print slot name on lcd
SETB RED_LED              //turn off RED LED
CLR GREEN_LED             // turn GREEN LED
DEC R4
INC R5
MOV DPTR,#S3
ACALL LCD_DISP
NEXT3:MOV A,p2                    //check s4 slot
RRC A
RRC A
RRC A
RRC A
JNC NEXT4
SETB RED_LED              //turn off RED LED
CLR GREEN_LED             // turn GREEN LED
DEC R4
INC R5
MOV DPTR,#S4                       //if slot are free print slot name on lcd
ACALL LCD_DISP
NEXT4:MOV A,p2                    //check s4 slot
RRC A
RRC A
RRC A
RRC A
RRC A
JNC NEXT5
SETB RED_LED              //turn off RED LED
CLR GREEN_LED             // turn GREEN LED
DEC R4
INC R5
CJNE R5,#5,CONT2
MOV DPTR,#LINE4
ACALL LCD_CMD
```

```
CONT2:MOV DPTR,#S5                    //if slot are free print slot name on lcd

ACALL LCD_DISP
NEXT5:MOV A,p2                  //check s4 slot
RRC A
RRC A
RRC A
RRC A
RRC A
RRC A
JNC NEXT6
SETB RED_LED            //turn off RED LED
CLR GREEN_LED           // turn GREEN LED
DEC R4
INC R5
CJNE R5,#5,CONT3
MOV DPTR,#LINE4
ACALL LCD_CMD
CONT3:MOV DPTR,#S6                    //if slot are free print slot name on lcd
ACALL LCD_DISP
NEXT6:MOV A,p2                  //check s4 slot
RRC A
RRC A
RRC A
RRC A
RRC A
RRC A
RRC A
JNC NEXT7
SETB RED_LED            //turn off RED LED
CLR GREEN_LED           // turn GREEN LED
DEC R4
INC R5
CJNE R5,#5,CONT4
MOV DPTR,#LINE4
ACALL LCD_CMD
CONT4:MOV DPTR,#S7                    //if slot are free print slot name on lcd
ACALL LCD_DISP
NEXT7:MOV A,p2                  //check s4 slot
```

```
RRC A
RRC A

RRC A

RRC A

RRC A  RRC

A

RRC A

RRC A

JNC NEXT8

SETB RED_LED                //turn off RED LED

CLR GREEN_LED               // turn GREEN LED

DEC R4

INC R5

CJNE R5,#5,CONT5

MOV DPTR,#LINE4

ACALL LCD_CMD

CONT5:MOV DPTR,#S8              //if slot are free print slot name on lcd

ACALL LCD_DISP  NEXT8:

acall delay_1s  acall

delay_1s

LJMP UP                                     //go to check the slots

command:     //function to send command  mov p1,a  clr p3.4

setb p3.6

acall delay
```

```
clr p3.6  acall
delay  acall
delay  ret

write:                                  //function to send data
mov p1,a  setb p3.4  setb p3.6  acall delay  clr p3.6
acall delay  acall delay
ret

LCD_DISP: CLR A        //function to send display string
MOVC A,@A+DPTR
JZ EXIT1
INC DPTR
ACALL write
SJMP LCD_DISP
EXIT1: RET

LCD_CMD: CLR A  MOVC            //function to send commands  A,@A+DPTR
JZ EXIT2
INC DPTR
ACALL command
SJMP LCD_CMD
EXIT2: RET

delay:  mov
r0,#1ch rep:
djnz r0,rep
ret

delay_1s:      mov                      //function for 1s delay
r3,#08h df1s:  mov r2,#0ffh d1s:  mov r1,#0ffh de1s:
djnz r1,de1s
djnz r2,d1s
djnz r3,df1s ret
```

```
TEXT1: DB " PARKING SYSTEM",0
TEXT2: DB " NO FREE SLOTS",0

FREE: DB " Free slots",0
S1: DB "S1 ",0
S2: DB "S2 ",0
S3: DB "S3 ",0
S4: DB "S4 ",0
S5: DB "S5 ",0
S6: DB "S6 ",0
S7: DB "S7 ",0
S8: DB "S8 ",0


INIT_COMMANDS: DB 38h,06h,0ch,01H,80H,0
LINE1: DB 01H,06H,06H,80H,0
LINE2: DB 0C0H,0
LINE3: DB 094H,0
LINE4: DB 0D4H,0

CLEAR: DB 01H,0
PARKED_VEHICAL: DB " parked vehicles:",0

End
```

9 RESULTS:

(i) <u>Keil software implementation:</u>

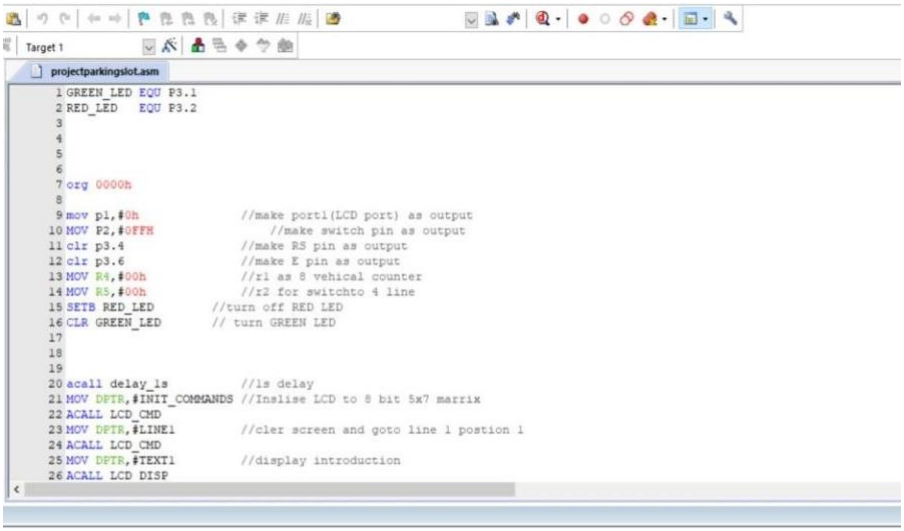

```
GREEN_LED EQU P3.1
RED_LED   EQU P3.2



org 0000h

mov p1,#0h              //make port1(LCD port) as output
MOV P2,#0FFH                //make switch pin as output
clr p3.4                //make RS pin as output
clr p3.6                //make E pin as output
MOV R4,#00h             //r1 as 8 vehical counter
MOV R5,#00h             //r2 for switchto 4 line
SETB RED_LED        //turn off RED LED
CLR GREEN_LED       // turn GREEN LED



acall delay_1s          //1s delay
MOV DPTR,#INIT_COMMANDS //Inslise LCD to 8 bit 5x7 marrix
ACALL LCD_CMD
MOV DPTR,#LINE1         //cler screen and goto line 1 postion 1
ACALL LCD_CMD
MOV DPTR,#TEXT1         //display introduction
ACALL LCD DISP
```

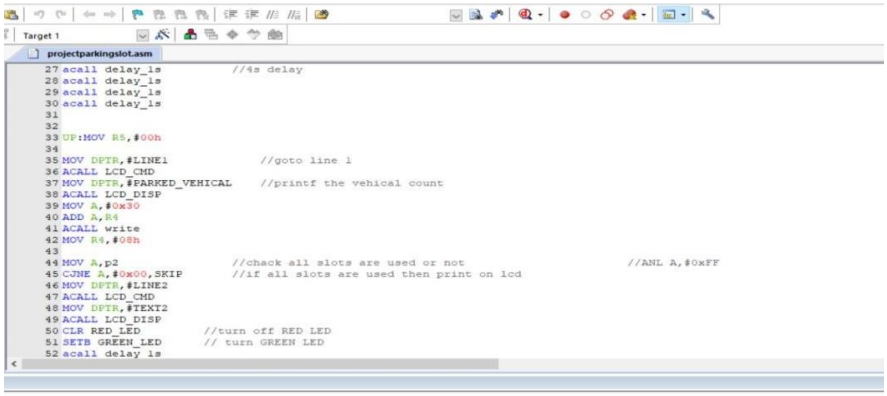

```
acall delay_1s          //4s delay
acall delay_1s
acall delay_1s
acall delay_1s


UP:MOV R5,#00h

MOV DPTR,#LINE1             //goto line 1
ACALL LCD_CMD
MOV DPTR,#PARKED_VEHICAL    //printf the vehical count
ACALL LCD_DISP
MOV A,#0x30
ADD A,R4
ACALL write
MOV R4,#08h

MOV A,p2                    //chack all slots are used or not                    //ANL A,#0xFF
CJNE A,#0x00,SKIP           //if all slots are used then print on lcd
MOV DPTR,#LINE2
ACALL LCD_CMD
MOV DPTR,#TEXT2
ACALL LCD_DISP
CLR RED_LED         //turn off RED LED
SETB GREEN_LED      // turn GREEN LED
acall delay 1s
```

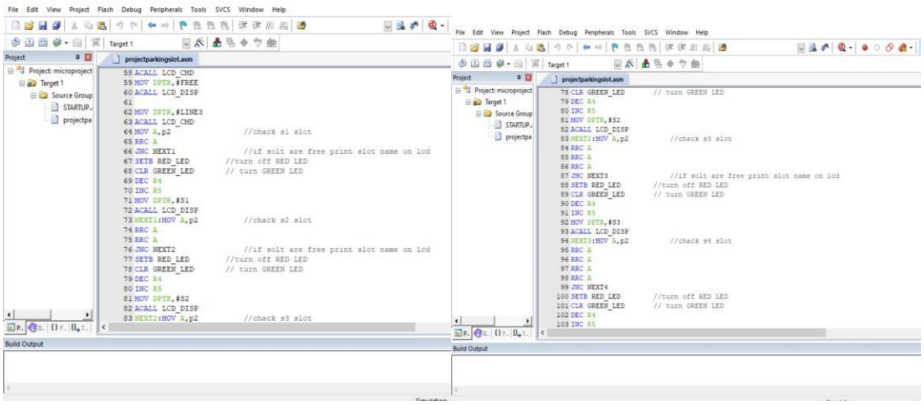

```
ACALL LCD_CMD
MOV DPTR,#FREE
ACALL LCD_DISP

MOV DPTR,#LINE3
ACALL LCD_CMD
MOV A,p2                //chack s1 slot
RRC A
JNC NEXT1               //if solt are free print slot name on lcd
SETB RED_LED        //turn off RED LED
CLR GREEN_LED       // turn GREEN LED
DEC R4
INC R5
MOV DPTR,#S1
ACALL LCD_DISP
NEXT1:MOV A,p2          //chack s2 slot
RRC A
RRC A
JNC NEXT2               //if solt are free print slot name on lcd
SETB RED_LED        //turn off RED LED
CLR GREEN_LED       // turn GREEN LED
DEC R4
INC R5
MOV DPTR,#S2
ACALL LCD_DISP
NEXT2:MOV A,p2          //chack s3 slot
```

```
CLR GREEN_LED       // turn GREEN LED
DEC R4
INC R5
MOV DPTR,#S2
ACALL LCD_DISP
NEXT2:MOV A,p2          //chack s3 slot
RRC A
RRC A
RRC A
JNC NEXT3               //if solt are free print slot name on lcd
SETB RED_LED        //turn off RED LED
CLR GREEN_LED       // turn GREEN LED
DEC R4
INC R5
MOV DPTR,#S3
ACALL LCD_DISP
NEXT3:MOV A,p2          //chack s4 slot
RRC A
RRC A
RRC A
RRC A
JNC NEXT4
SETB RED_LED        //turn off RED LED
CLR GREEN_LED       // turn GREEN LED
DEC R4
INC R5
```

```
MOV DPTR,#S4            //if solt are free print slot name on lcd
ACALL LCD_DISP
NEXT4:MOV A,p2          //chack s4 slot
RRC A
RRC A
RRC A
RRC A
RRC A
RRC A
JNC NEXT5
SETB RED_LED        //turn off RED LED
CLR GREEN_LED       // turn GREEN LED
DEC R4
INC R5
CJNE R5,#5,CONT2
MOV DPTR,#LINE4
ACALL LCD_CMD
CONT2:MOV DPTR,#S5          //if solt are free print slot name on lcd

ACALL LCD_DISP
NEXT5:MOV A,p2          //chack s4 slot
RRC A
RRC A
RRC A
RRC A
RRC A
RRC A
```

```
RRC A
JNC NEXT6
SETB RED_LED        //turn off RED LED
CLR GREEN_LED       // turn GREEN LED
DEC R4
INC R5
CJNE R5,#5,CONT3
MOV DPTR,#LINE4
ACALL LCD_CMD
CONT3:MOV DPTR,#S6          //if solt are free print slot name on lcd
ACALL LCD_DISP
NEXT6:MOV A,p2          //chack s4 slot
RRC A
RRC A
RRC A
RRC A
RRC A
RRC A
RRC A
JNC NEXT7
SETB RED_LED        //turn off RED LED
CLR GREEN_LED       // turn GREEN LED
DEC R4
INC R5
CJNE R5,#5,CONT4
MOV DPTR,#LINE4
```

```
RRC A
RRC A
RRC A
RRC A
RRC A
RRC A
JNC NEXT8
SETB RED_LED        //turn off RED LED
CLR GREEN_LED       // turn GREEN LED
DEC R4
INC R5
CJNE R5,#5,CONT5
MOV DPTR,#LINE4
ACALL LCD_CMD
CONT5:MOV DPTR,#S8          //if solt are free print slot name on lcd
ACALL LCD_DISP
NEXT8:
acall delay_1s
acall delay_1s
LJMP UP                 //goto chak the slots


command:                //function to send cammand
mov p1,a
clr p3.4
setb p3.6
```

```
RRC A
JNC NEXT8
SETB RED_LED        //turn off RED LED
CLR GREEN_LED       // turn GREEN LED
DEC R4
INC R5
CJNE R5,#5,CONT5
MOV DPTR,#LINE4
ACALL LCD_CMD
CONT5:MOV DPTR,#S8          //if solt are free print slot name on lcd
ACALL LCD_DISP
NEXT8:
acall delay_1s
acall delay_1s
LJMP UP                 //goto chak the slots


command:                //function to send cammand
mov p1,a
clr p3.4
setb p3.6
acall delay
clr p3.6
acall delay
acall delay
ret
```

```
clr p3.6
acall delay
acall delay
ret


write:                  //function to send data
mov p1,a
setb p3.4
setb p3.6
acall delay
clr p3.6
acall delay
acall delay
ret


LCD_DISP: CLR A         //function to send display string
MOVC A,@A+DPTR
JZ EXIT1
INC DPTR
ACALL write
JUMP LCD_DISP
EXIT1: RET


LCD_CMD: CLR A          //finction to send cammandes
```

```
LCD_CMD: CLR A          //finction to send cammandes
MOVC A,@A+DPTR
JZ EXIT2
INC DPTR
ACALL command
SJMP LCD_CMD
EXIT2: RET



delay:
mov r0,#1ch
rep:
djnz r0,rep
ret

delay_1s:               //function for 1s delay
mov r3,#08h
dfls:
mov r2,#0ffh
dls:
mov r1,#0ffh
dels:
djnz r1,dels
djnz r2,dls
```

SUCCESSFUL SIMULATION OF CODE:

```
TEXT1: DB " PARKING SYSTEM",0
TEXT2: DB " NO FREE SLOTS",0

FREE: DB " Free slots",0
S1: DB "S1 ",0
S2: DB "S2 ",0
S3: DB "S3 ",0
S4: DB "S4 ",0
S5: DB "S5 ",0
S6: DB "S6 ",0
S7: DB "S7 ",0
S8: DB "S8 ",0


INIT_COMMANDS: DB 38h,06h,0ch,01H,80H,0
LINE1: DB 01H,06H,06H,80H,0
LINE2: DB 0C0H,0
LINE3: DB 094H,0
LINE4: DB 0D4H,0

CLEAR: DB 01H,0
PARKED_VEHICAL: DB " parked vehicles:",0

end

".\Objects\microproject 18BEC0976"...
18BEC0976" - 0 Error(s), 3 Warning(s).
```

(ii) IMPLEMENTATION USING PROTEUS

CIRCUIT DIAGRAM:

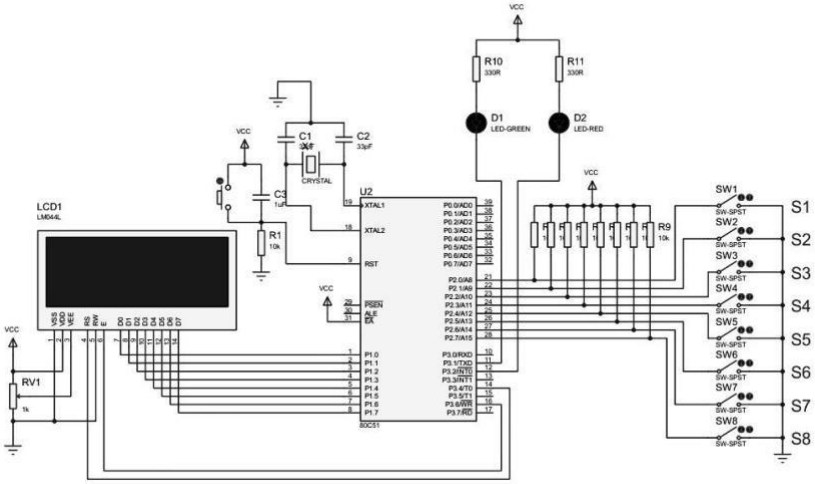

SIMULATIONS AND RESULTS of Proteus:

Circuit:

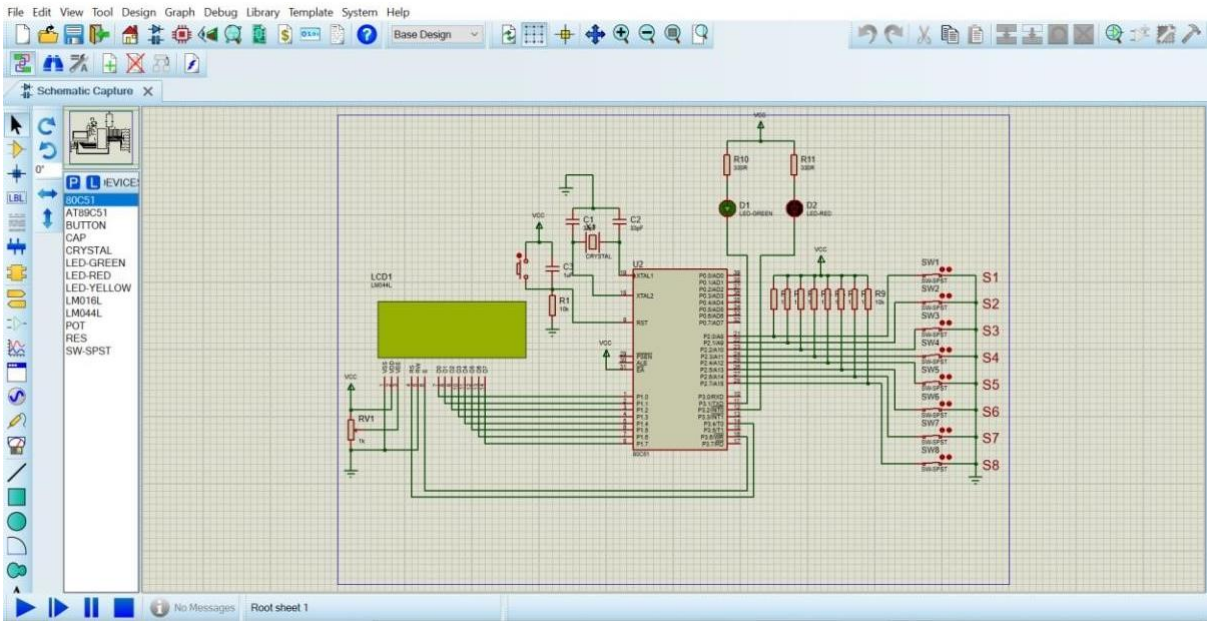

Importing HEX file to MC8051:

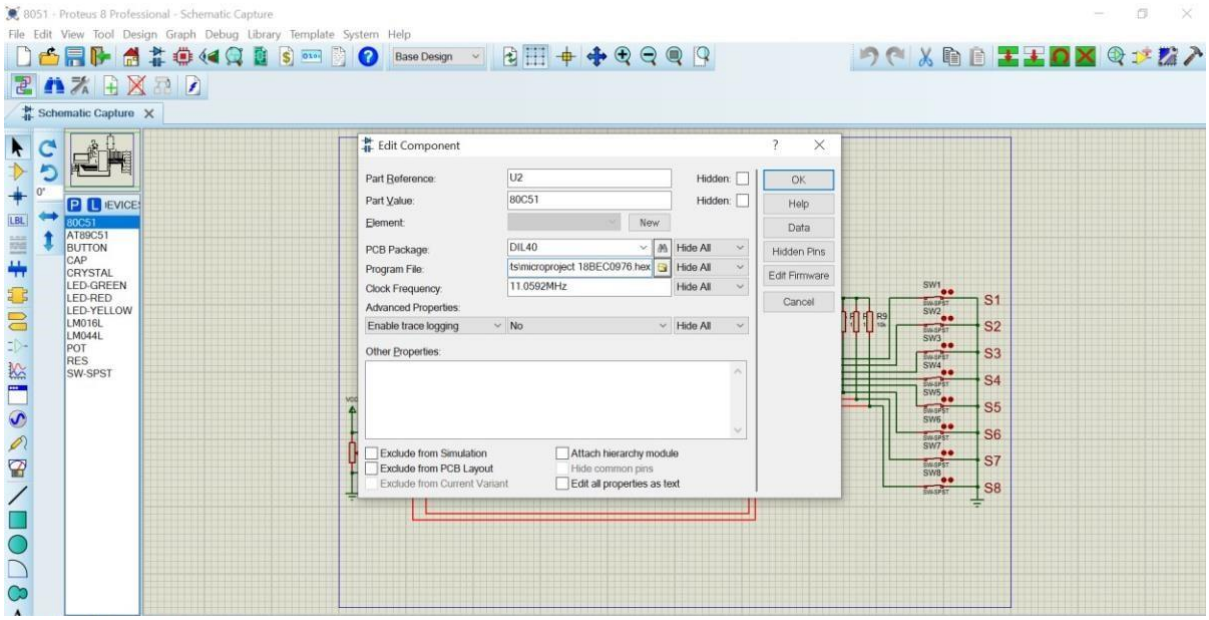

OUTPUT RESULTS:

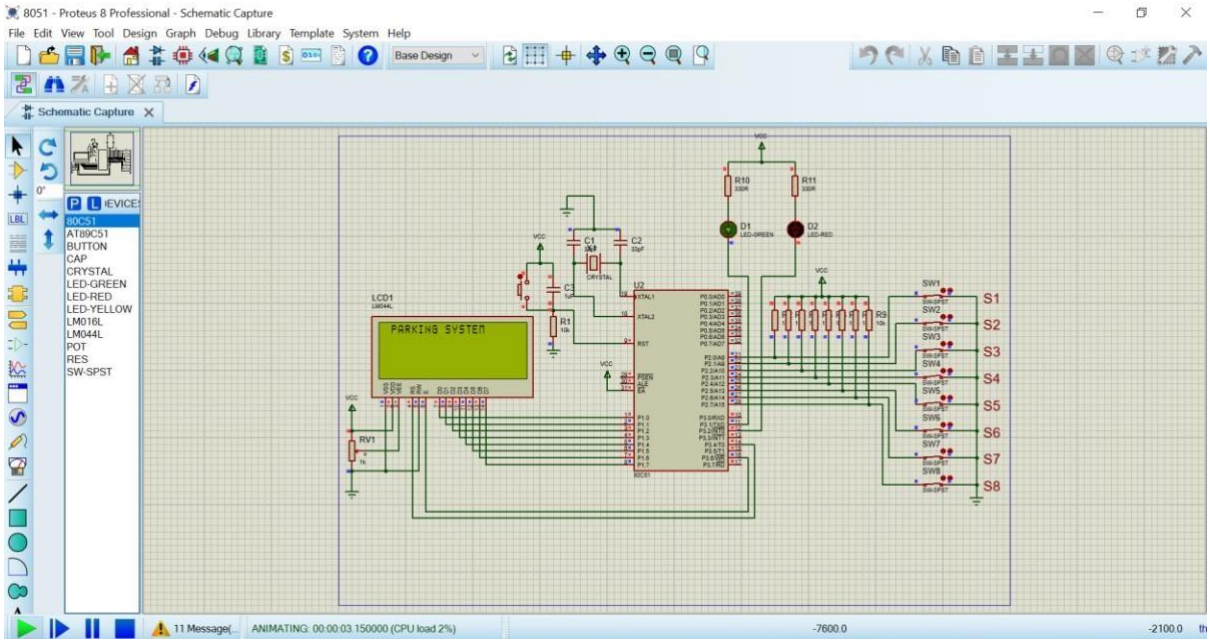

<u>CASE 1:</u>

WHEN ALL SLOTS ARE FULL:

- Parked vehicles: 8
- Free slots: NO FREE SLOTS

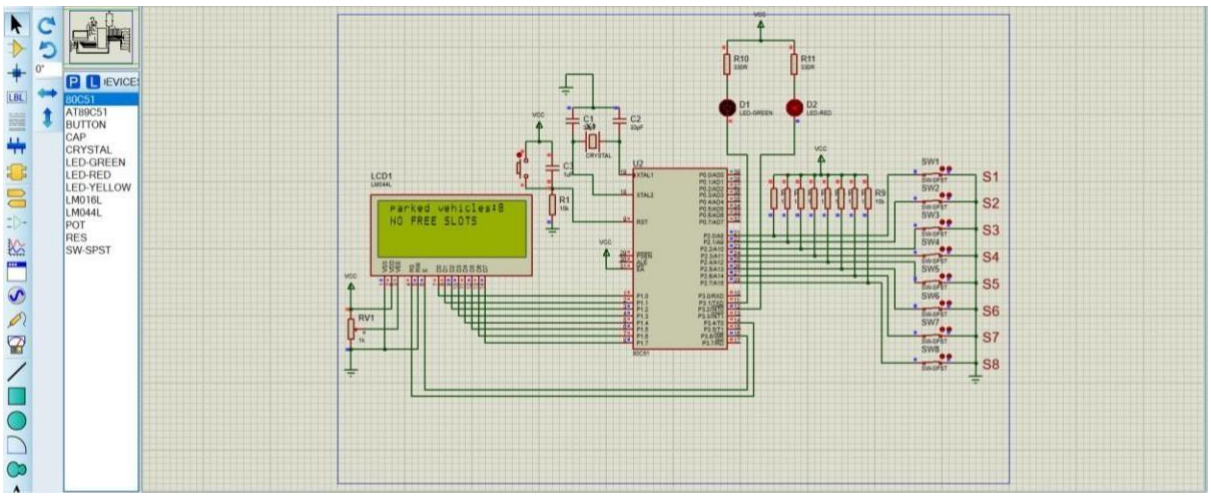

CASE 2: WHEN SOME SLOTS ARE FREE: •

Parked vehicles: 5 • Free slots:

FREE SLOTS

S1 S2 S5

(NOTE: S1 S2 S5 these are the free slots available)

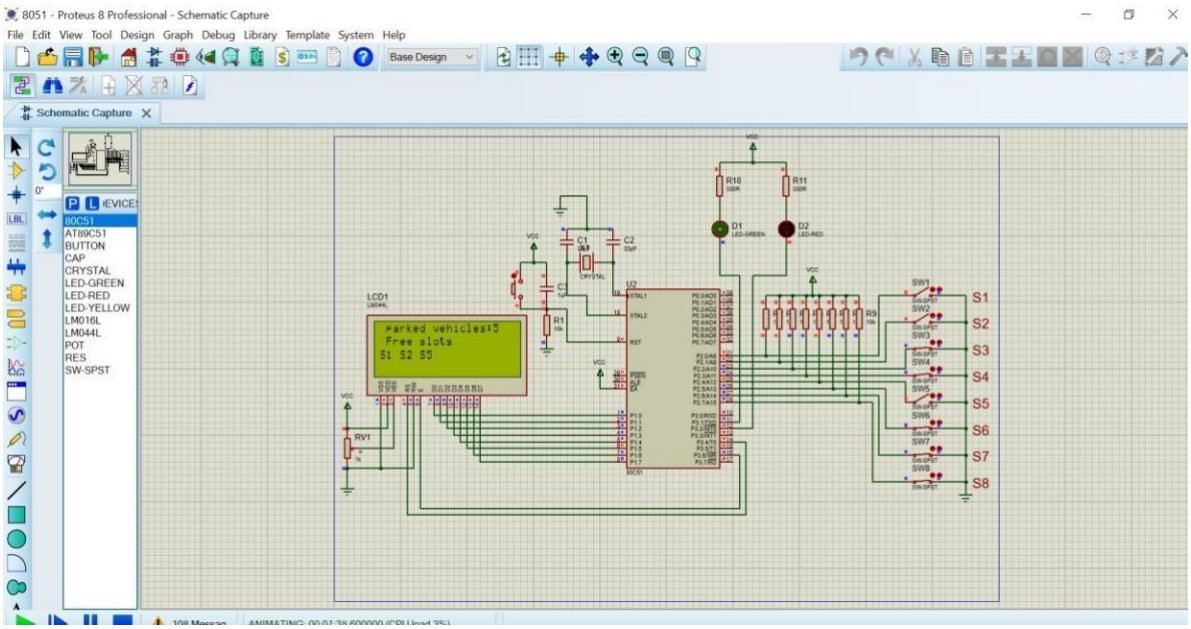

CASE 3: WHEN SOME SLOTS ARE FREE: •

Parked vehicles: 3

- Free slots:

  FREE SLOTS

S1 S2 S5 S7 S8

(NOTE: S1 S2 S5 these are the free slots available)

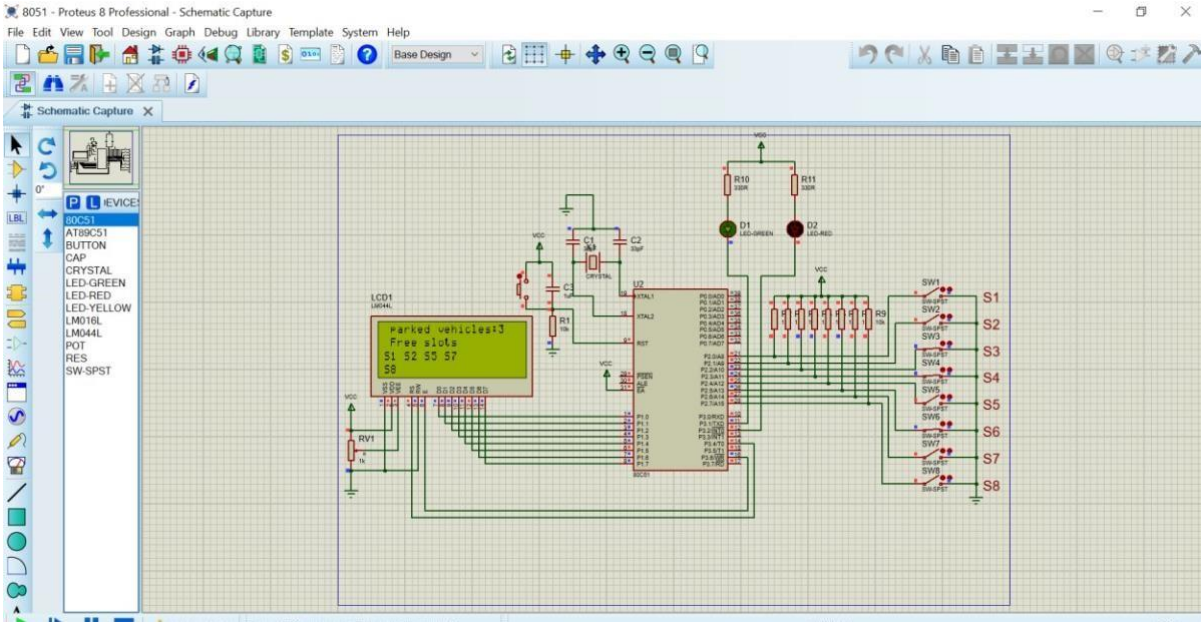

CASE 4: WHEN ALL SLOTS ARE FREE: •

Parked vehicles: 0 • Free slots:

FREE SLOTS

S1 S2 S3 S4

S5 S6 S7 S8

(NOTE: S1 S2 S1 S2 S3 S4 S5 S6 S7 S8, these are the free slots available)

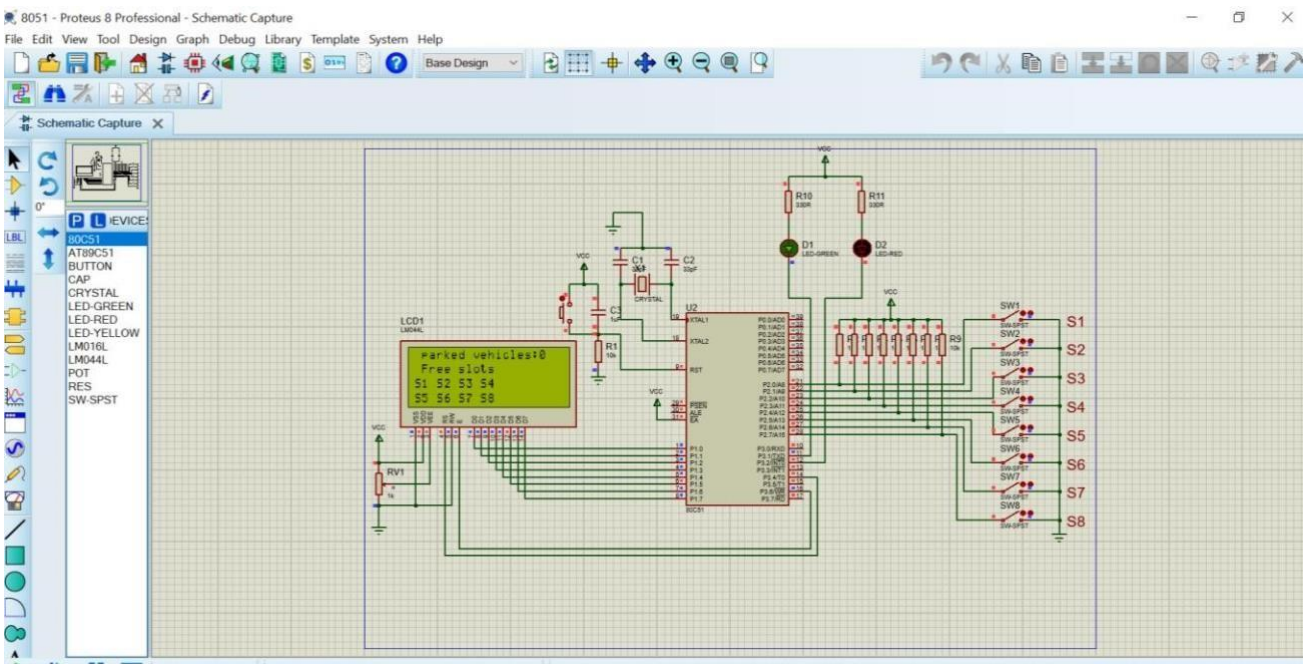

From above results, we can see functional parking system that works on the basis of 8051 microcontroller using ASM language.
Here the switches will be replaced by sensors in real like which will detect the presence of the car and based on that, the cars will be detected and hence the Smart parking system is implemented successfully.

10.CONCLUSION:

The system can be used at all places starting from domestic to the industrial sectors. The simplicity in the usage of circuit helps it to be used by a large number of people, because people with less knowledge of hardware can also use it without facing any problem. This Automated car parking system enables the parking of vehicles and thus reduces the time taken to check the space to be used by displaying the spot where the space for parking is available on an LCD display by using IR sensors (represented as switches) at the entrance. This can be expanded in the sense of security. Using metal detectors and CCTV cameras security of the parking area can be enhanced, we can add the Pick and Place facility to park the cars automatically.

FUTURE SCOPE:

- We can monitor some parameters like temperature, fire and at the same time control them Our project monitors only the Parking slots. If we must detect fire or smoke in the parking area then we can connect these sensors to our project and at the output side we can connect water sprinkler to control the fire.
- The data can be stored using cloud technologies like AWS, Fire Store, Azure, etc and retrieve it using an app that can be developed in mobiles so that the data displayed will be given directly to the user.

11. REFERENCES:

https://www.keil.com/rtx51/

http://fadhl-alakwa.weebly.com/uploads/5/3/6/4/5364958/___the_8051_microcontroller_and_embedded_systems_using_assembly_and_c-2nd-ed_by_mazidi.pdf

https://export.arxiv.org/ftp/arxiv/papers/1912/1912.01697.pdf

https://youtu.be/xIYWZTu4L0c

https://www.technoarete.org/common_abstract/pdf/IJERCSE/v4/i6/Ext_03295.pdf

https://www.researchgate.net/publication/321027384_Modern_car_parking_system_using_Micro_controller_and_smart_intelligent_application_system_Techniques

http://blogs.cornell.edu/armapp/2013/03/27/revenue-management-in-carparking-industry/

http://arxiv-export-lb.library.cornell.edu/pdf/1708.07932