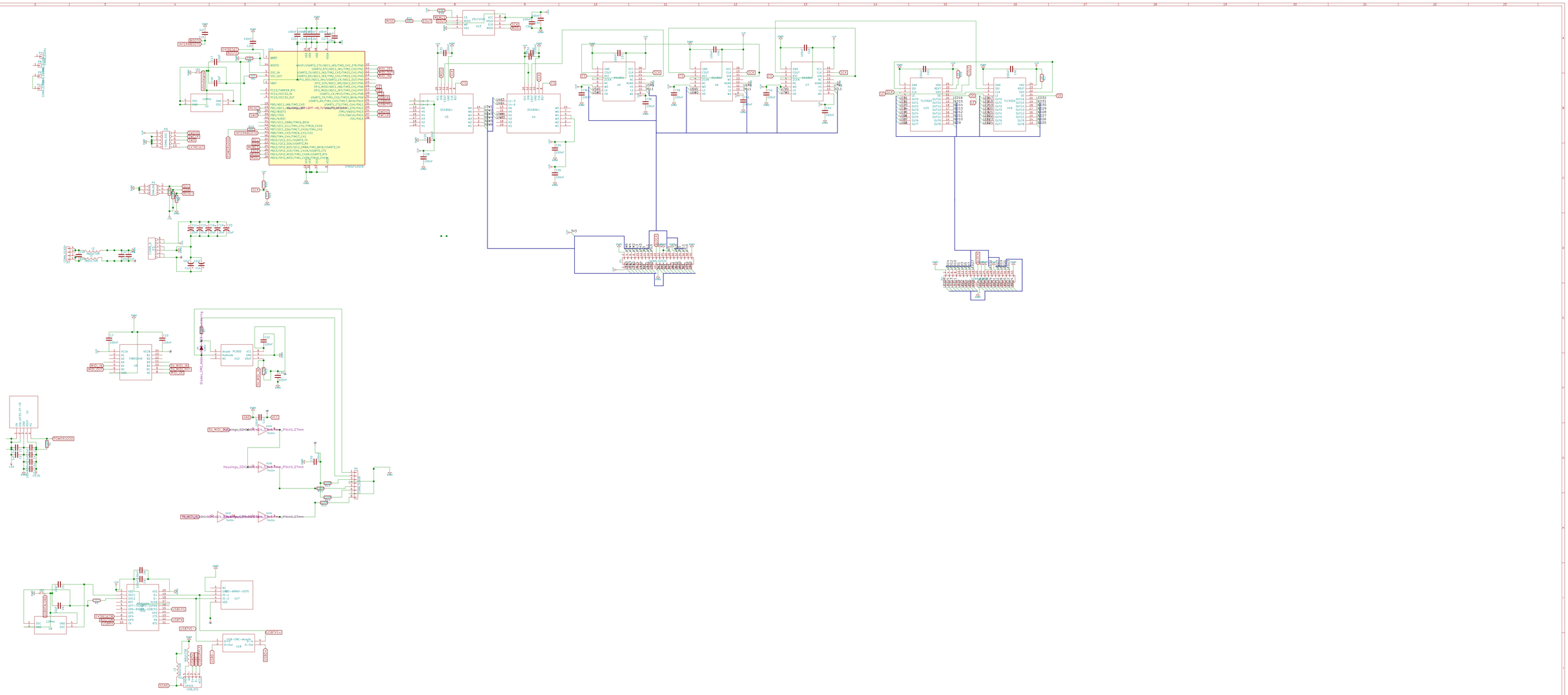
STM32F103C8
DS1806+
DS1806+
DS1806+
DS1806+
74HC165
74HC165
74HC165
74HC165
TLC5926
TLC5926
TLC5926
TLC5926
74HC595
74HC595
74HC595