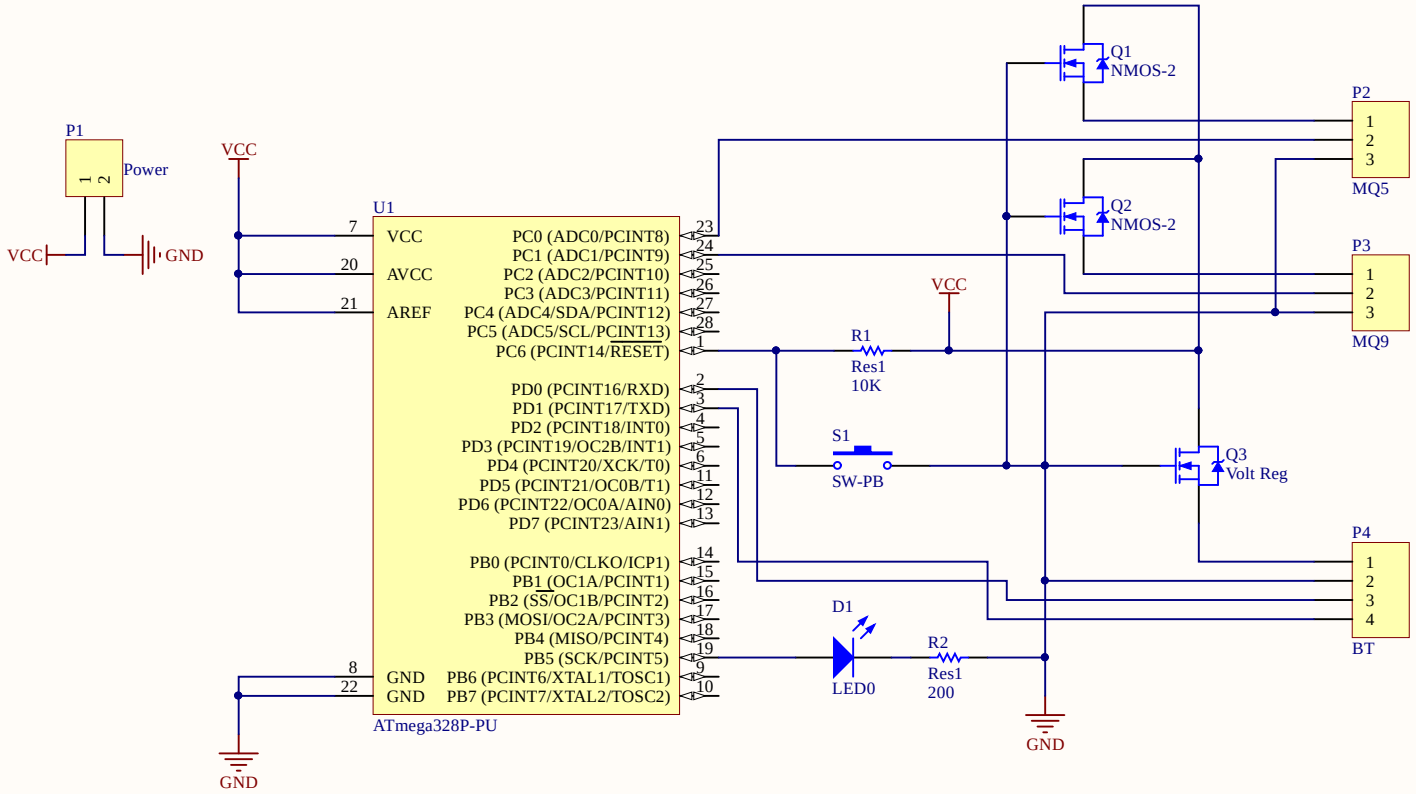


| Title | | |
|---|---|---|
| Size A4 | Number | Revision |
| Date: 14/04/2016 | | Sheet of |
| File: D:\Documents\..\AerO2.SchDoc | | Drawn By: |

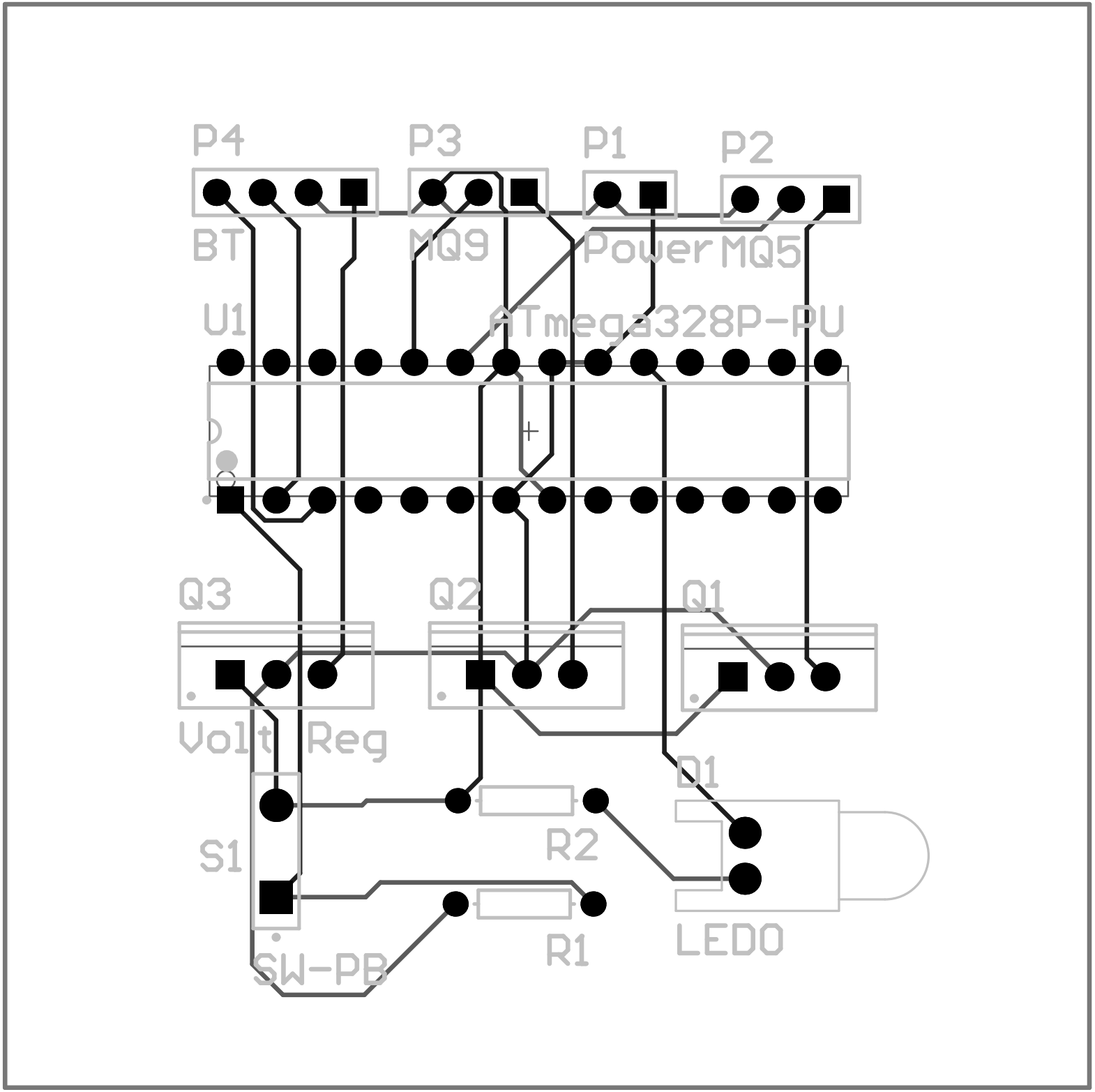
P4
P3
P1
P2
BT
MQ9
Power
MQ5
U1
ATmega328P-PU
Q3
Q2
Q1
Volt Reg
D1
R2
S1
R1
LED0
SW-PB