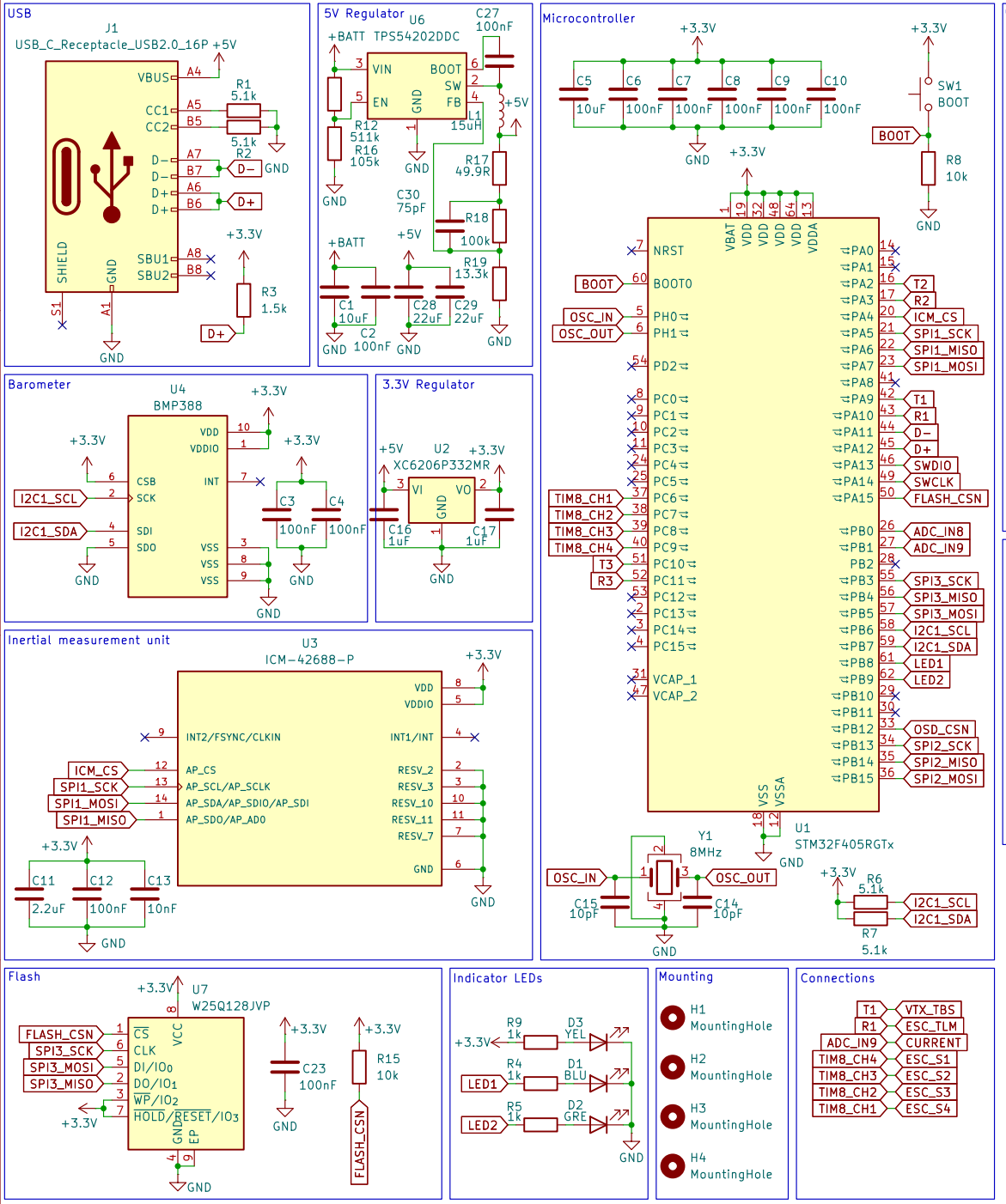

Mher Saribekyan

Cobalt

Sheet: /

File: fcu.kicad_sch

Title: COBALT F405

Size: A4	Date: 2025-08-06	**Rev: 0.1**
KiCad E.D.A. 9.0.3		Id: 1/1