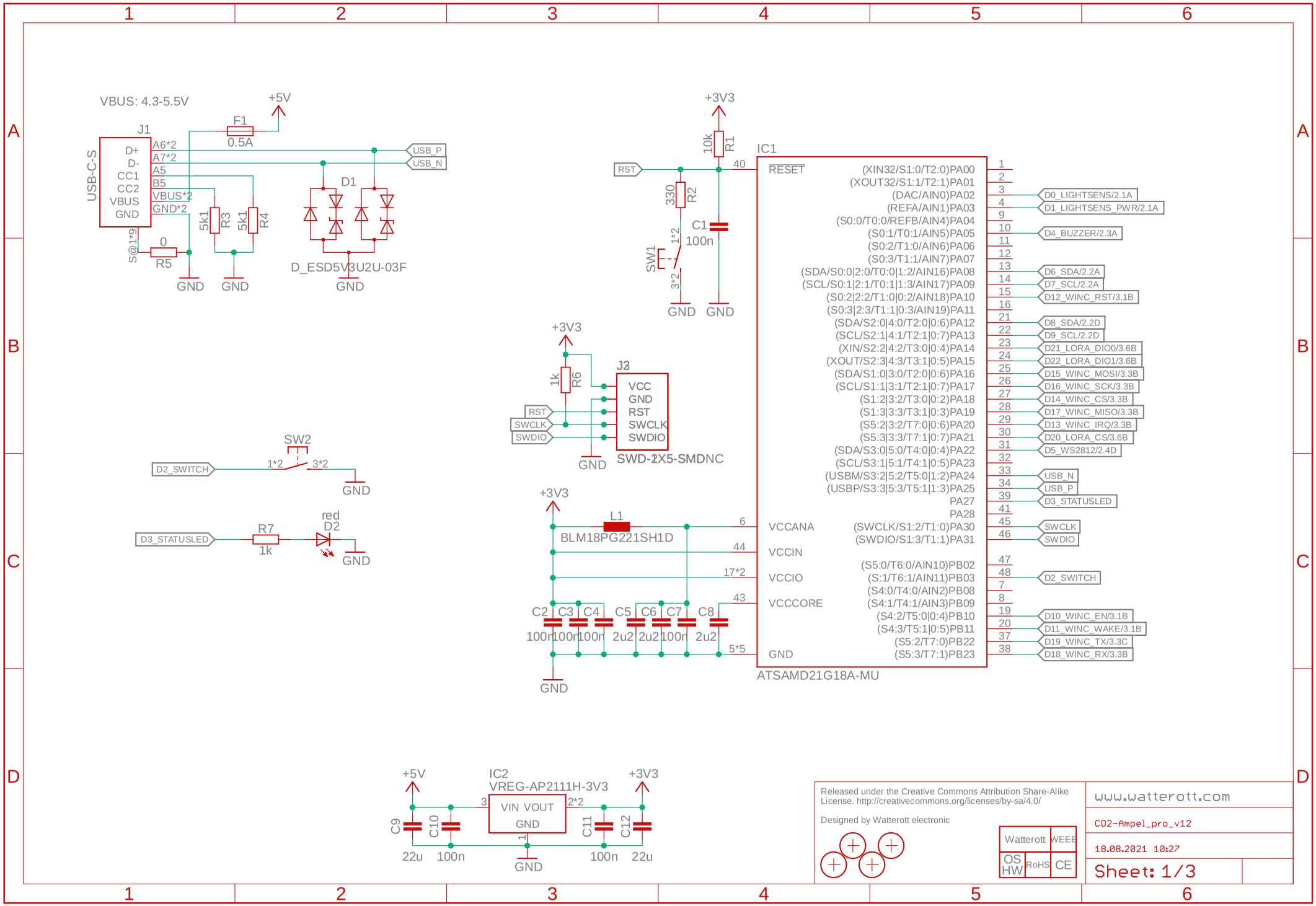
VBUS: 4.3-5.5V
+5V
F1
0.5A
J1
USB-C-S
D+
D-
CC1
CC2
VBUS
GND
A6*2
A7*2
A5
B5
VBUS*2
GND*2
S@1*9
0
R5
5k1
R3
5k1
R4
D1
D_ESD5V3U2U-03F
USB_P
USB_N
GND
+3V3
10k
R1
RST
330
R2
C1
100n
SW1
1*2
3*2
IC1
RESET
(XIN32/S1:0/T2:0)PA00
(XOUT32/S1:1/T2:1)PA01
(DAC/AIN0)PA02
(REFA/AIN1)PA03
(S0:0/T0:0/REFB/AIN4)PA04
(S0:1/T0:1/AIN5)PA05
(S0:2/T1:0/AIN6)PA06
(S0:3/T1:1/AIN7)PA07
(SDA/S0:0|2:0/T0:0|1:2/AIN16)PA08
(SCL/S0:1|2:1/T0:1|1:3/AIN17)PA09
(S0:2|2:2/T1:0|0:2/AIN18)PA10
(S0:3|2:3/T1:1|0:3/AIN19)PA11
(SDA/S2:0|4:0/T2:0|0:6)PA12
(SCL/S2:1|4:1/T2:1|0:7)PA13
(XIN/S2:2|4:2/T3:0|0:4)PA14
(XOUT/S2:3|4:3/T3:1|0:5)PA15
(SDA/S1:0|3:0/T2:0|0:6)PA16
(SCL/S1:1|3:1/T2:1|0:7)PA17
(S1:2|3:2/T3:0|0:2)PA18
(S1:3|3:3/T3:1|0:3)PA19
(S5:2|3:2/T7:0|0:6)PA20
(S5:3|3:3/T7:1|0:7)PA21
(SDA/S3:0|5:0/T4:0|0:4)PA22
(SCL/S3:1|5:1/T4:1|0:5)PA23
(USBM/S3:2|5:2/T5:0|1:2)PA24
(USBP/S3:3|5:3/T5:1|1:3)PA25
PA27
PA28
VCCANA
(SWCLK/S1:2/T1:0)PA30
(SWDIO/S1:3/T1:1)PA31
VCCIN
(S5:0/T6:0/AIN10)PB02
VCCIO
(S:1/T6:1/AIN11)PB03
(S4:0/T4:0/AIN2)PB08
VCCCORE
(S4:1/T4:1/AIN3)PB09
(S4:2/T5:0|0:4)PB10
(S4:3/T5:1|0:5)PB11
(S5:2/T7:0)PB22
(S5:3/T7:1)PB23
GND
ATSAMD21G18A-MU
D0_LIGHTSENS/2.1A
D1_LIGHTSENS_PWR/2.1A
D4_BUZZER/2.3A
D6_SDA/2.2A
D7_SCL/2.2A
D12_WINC_RST/3.1B
D8_SDA/2.2D
D9_SCL/2.2D
D21_LORA_DIO0/3.6B
D22_LORA_DIO1/3.6B
D15_WINC_MOSI/3.3B
D16_WINC_SCK/3.3B
D14_WINC_CS/3.3B
D17_WINC_MISO/3.3B
D13_WINC_IRQ/3.3B
D20_LORA_CS/3.6B
D5_WS2812/2.4D
USB_N
USB_P
D3_STATUSLED
SWCLK
SWDIO
D2_SWITCH
D10_WINC_EN/3.1B
D11_WINC_WAKE/3.1B
D19_WINC_TX/3.3C
D18_WINC_RX/3.3B
1k
R6
J2
VCC
GND
RST
SWCLK
SWDIO
SWD-2X5-SMDNC
SW2
1*2
3*2
D2_SWITCH
D3_STATUSLED
R7
1k
red
D2
L1
BLM18PG221SH1D
C2
C3
C4
C5
C6
C7
C8
100n
100n
100n
2u2
2u2
100n
2u2
5*5
17*2
IC2
VREG-AP2111H-3V3
VIN VOUT
GND
C9
C10
C11
C12
22u
100n
100n
22u
Released under the Creative Commons Attribution Share-Alike License. http://creativecommons.org/licenses/by-sa/4.0/
Designed by Watterott electronic
Watterott
WEEE
OS HW
RoHS
CE
www.watterott.com
CO2-Ampel_pro_v12
18.08.2021 10:27
Sheet: 1/3

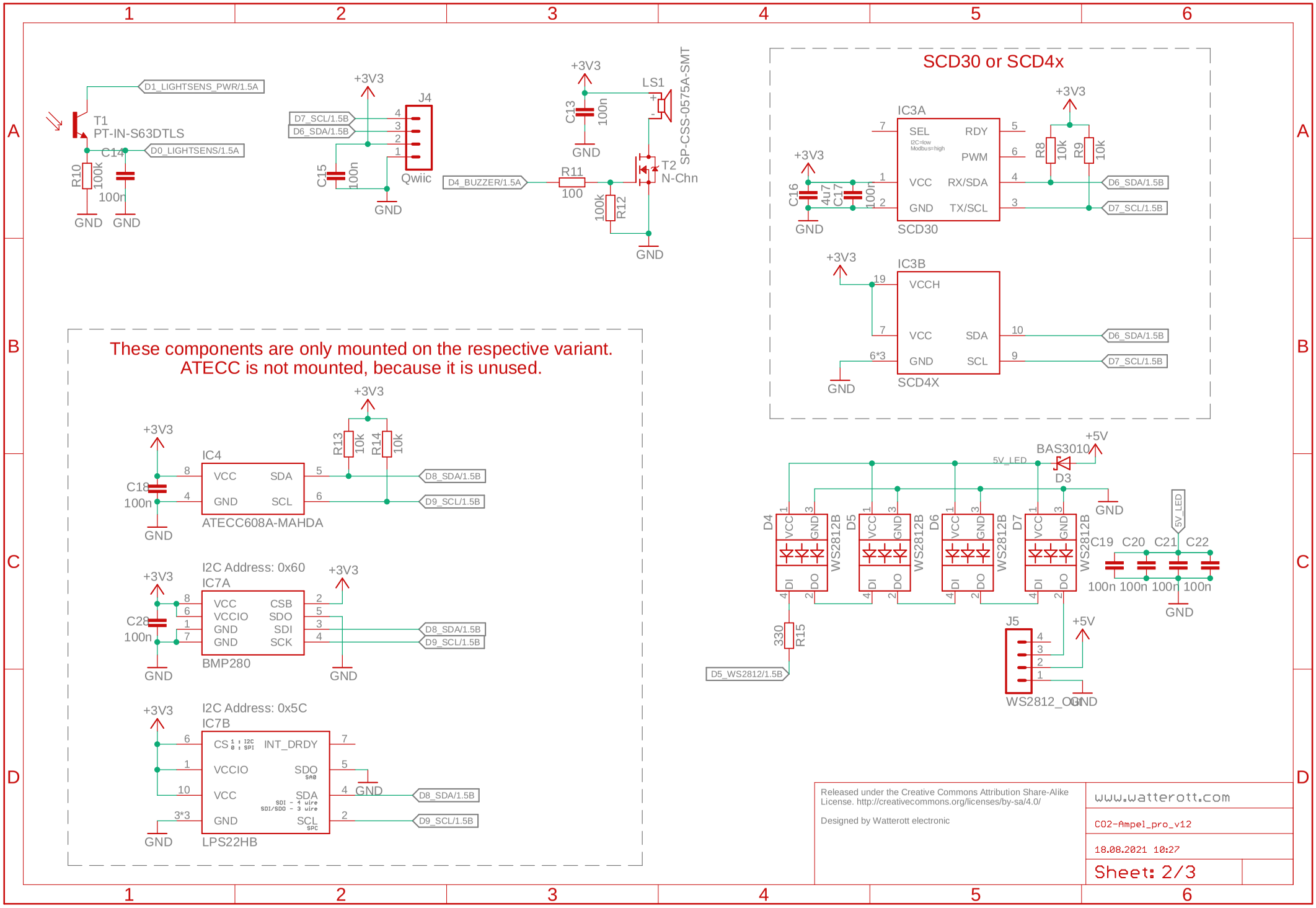

Released under the Creative Commons Attribution Share-Alike License. http://creativecommons.org/licenses/by-sa/4.0/

Designed by Watterott electronic

www.watterott.com

C02-Ampel_pro_v12

18.08.2021 10:27

Sheet: 2/3

These components are only mounted on the respective variant.

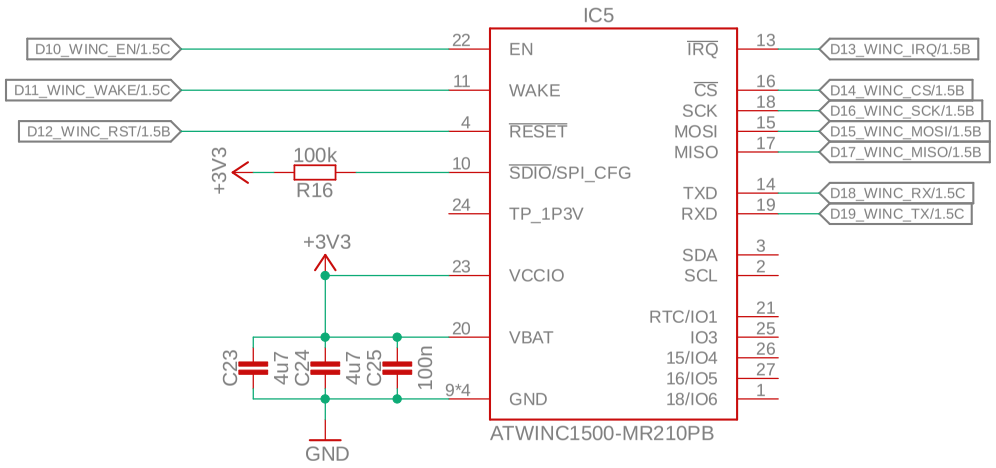

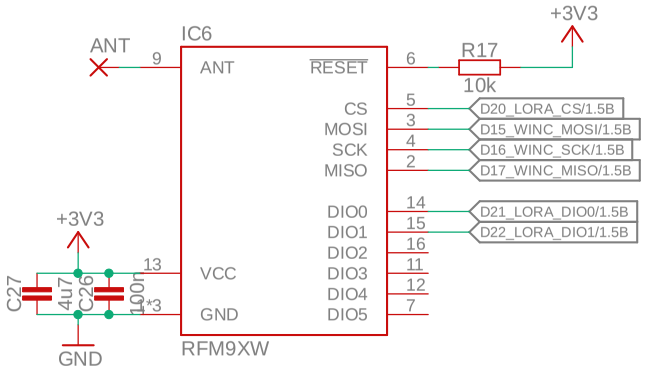

Released under the Creative Commons Attribution Share-Alike License. http://creativecommons.org/licenses/by-sa/4.0/

Designed by Watterott electronic

www.watterott.com

CO2-Ampel_pro_v12

18.08.2021 10:27

Sheet: 3/3

CO2 Ampel
www.watterott.com
v1.2
Status
WS2812
1=GND
2=5V
3=OUT
4=NC
I2C
1=GND
2=3V3
3=SDA
4=SCL
Reset
Switch
1
2
3
4