Paper Optimality of HCI

$$p_i = \sum_{j=1}^{n} [A^{N-1}(X)_{ji}]$$

$N=2$ $\quad A_{ji} = p(e_j|e_i,X)$

$$p_i \quad \sum_j A(X)_{ji} = \sum_j p(e_j|e_i,X)$$

$N=3$ Wahrscheinlichkeiten

$p(e_3|e_2)\cdot p(e_2|e_1,X)$ da lag 2

$A^2_{ij} :=$ P für alle Eisbern die bei i anfang und bei j enden

Induktion. dann auch für alle N

$$\langle x_t \rangle = \frac{\delta w_{xy}}{1-\delta(1-w_{xy})} \langle y_t \rangle_t$$

$$\langle y_t \rangle_t [1-\delta(1-w_{yx})] = \frac{\delta w_{yx}\,\delta w_{xy}}{1-\delta(1-w_{xy})} \langle y_b \rangle$$

$$\langle y_t \rangle (1-\delta(1-w_{yx})) - \frac{\delta^2 w_{yx} w_{xy}}{1-\delta(1-w_{xy})} (= 0$$

$$\langle y_b \rangle ((1-\delta(1-w_{yx}))(1-\delta(1-w_{xy})) - \delta^2 w_{yx} w_{xy})$$

$$(1-\delta(1-w_{xy}) - \delta(1-w_{yx}) + \delta^2(1-w_{xy})(1-w_{yx}) - \delta^2 w_{yx} w_{xy})) \neq 0$$

Criticality EHE Modell – Thesis Lemina

- SOC via Long Term Plasticity
  ↳ Algorithm ⇒ Branching ratio < 1
  $S_i(t) = \mathbb{1}\{\text{Neuron } i \text{ feuert zu Zeit } t\}$

Globalität:

$$\min E(t) = \frac{1}{2}\left(\sum_i s_i(t) - \sum_i s_i(t-1)\right)^2$$

Local learning rule (j idx postsyn.)

$$\min E_i(t) = \mathbb{1}\{s_i(t-1)=1\}\ \frac{1}{2}\left(\sum_j s_j(t) - 1\right)^2$$

↳ Simpler Rule than in Hochlehnert & BT

$$\ell = \sum_j s_j(t)$$

$$\alpha_i^{t+1} = \alpha_i^t + \varepsilon(1-\ell) - \frac{1}{N} \rightarrow$$

Formel anders als auf S.34 aber macht nur so Sinn

- Mittelwert der α_i = Anzahl resultiert aus (10% connections with 10 activity)
  ↳ also scale free networks etc.
- Network with depressing Synapses

Population Dynamics: E → effective, I (inactive), R (recovered)

$$\dot{R} = \frac{I}{\tau_{rec}}$$

$$\dot{E} = -\frac{E}{\tau_{inact}} + U_{SE} R\, \delta(t - t_{sp})$$

$\tau_{inact} \approx 3\,ms$ ⇒ fast
↳ separation of time scales

$$I = 1 - R - E$$

Utilization of Synaptic efficacy

- fully connected Network of Integrate and fire Neurons
  & Random Pot.: & R. Pic
  $h_i(t) > \theta$ ⇒ spike to all other Neurons at fixed delay

S.40

$$\dot{h}_i = \delta_{i\,\xi(t)} I^{ext} + \frac{1}{N}\sum_j u J_{ij}\, \delta(t - t_{sp}^j - \tau_d)$$

$$\dot{J}_{ij} = \frac{1}{\tau_J}\left(\frac{\alpha}{u} - J_{ij}\right) - u J_{ij}\, \delta(t - t_{sp}^j)$$

↳ SOC in certain Parameter range ⇒ grows larger with N

Intuition: In the supercritical case, transmitters are depleted and activity drops again

- Leakage: structural stability w.r.t. non-zero leaks
  ↳ Loss currents compensated by active process ⇒ adaptive threshold
  - $\dot{h}(t) = -\frac{1}{\tau} h(t) + \xi + I^{ext} + I^{inh}$

    summarizing reg. mechanism to stay close to threshold
- Inhibition: Random 20% Neurons Inhibitory
  ↳ still power law but for $\Delta S > \bar{S} = L$
- Facilitating synapses

→ increase of u

$$\dot{h}_i = \delta_{i\,\xi(t)} I^{ext} + \frac{1}{N}\sum_j u_{ij}(t_{sp}) J_{ij}(t_{sp})\, \delta(t - t_{sp} - \tau_d)$$

$$\dot{J}_{ij} = \frac{1}{\tau_J}\left(\frac{\alpha}{u_0} - J_{ij}\right) - u_{ij} J_{ij}\, \delta(t - t_{sp}^j)$$

$$\dot{u}_{ij} = \frac{1}{\tau_u}(u_0 - u_{ij}) + (1 - u_{ij}) u_0\, \delta(t - t_{sp}^j) \rightarrow$$

Bifurcation analysis
mean field etc.

- harder to analyse but still SOC
- STDP + homeost. reg + depr. synapses
  ↳ cooperativity lead to criticality

$$w_{ij} = u J_{ij}\, w_{ij}^{STDP}\, w_{ij}^{h}$$

Chapter 20 in criticality in neural systems

Fit power laws:

Ito: $p(s) = s^{-\frac{3}{2}}$

$$\int_1^\infty s^{-\frac{3}{2}} ds = \left[-2 s^{-\frac{1}{2}}\right]_1^\infty = 0 + 2$$

Disclaimer:

$$\sum_{s=1}^\infty s^{-\frac{3}{2}} = \text{irgendwas?}$$ kann jetzt zumindest

$$F_{VA}(p) = \frac{1 - \sqrt{\frac{\ell}{p}}}{1 - \sqrt{\frac{\ell}{L}}} \quad \text{for } \ell < s < L$$

passend zu mir in Zugss und Klang?

$$P_{VA}(p) = \left(1 - \sqrt{\frac{\ell}{L}}\right)^{-1} \cdot \left(-\sqrt{\ell}\right) \cdot \left(-\frac{1}{2}\right) p^{-\frac{3}{2}}$$

$$P_{VA<s_0} = \frac{1}{2} \cdot \frac{\sqrt{\ell} \cdot p^{-\frac{3}{2}}}{1 - \sqrt{\frac{\ell}{L}}}$$

$$\frac{1}{2}\int_\ell^L \frac{\sqrt{\ell}}{1 - \sqrt{\frac{\ell}{L}}} \cdot p^{-\frac{3}{2}} dp = \frac{\sqrt{\ell}}{1 - \sqrt{\frac{\ell}{L}}}\left[-2 p^{-\frac{1}{2}}\right]_\ell^L = \frac{\sqrt{\ell}}{1 - \sqrt{\frac{\ell}{L}}} \cdot \left(\frac{1}{\sqrt{\ell}} - \frac{1}{\sqrt{L}}\right)$$

$$= \frac{1}{1 - \sqrt{\frac{\ell}{L}}} - \frac{\sqrt{\frac{\ell}{L}}}{1 - \sqrt{\frac{\ell}{L}}} = \frac{1 - \sqrt{\frac{\ell}{L}}}{1 - \sqrt{\frac{\ell}{L}}}$$

$$\frac{1}{2}\int_\ell^L \frac{\sqrt{\ell}}{1 - \sqrt{\frac{\ell}{L}}} \cdot p^{-\frac{3}{2}} dp \qquad \left[-2 \cdot p^{-\frac{1}{2}}\right]_\ell^L$$

$$\frac{\sqrt{\ell}}{1 - \sqrt{\frac{\ell}{L}}} \cdot \left[\frac{1}{\sqrt{\ell}} - \frac{1}{\sqrt{L}}\right]$$

$$= \frac{1}{1 - \sqrt{\frac{\ell}{L}}} - \frac{\sqrt{\frac{\ell}{L}}}{1 - \sqrt{\frac{\ell}{L}}} = \frac{1 - \sqrt{\frac{\ell}{L}}}{1 - \sqrt{\frac{\ell}{L}}}$$

$$\frac{1}{2}\frac{\sqrt{\ell}}{1 - \frac{\sqrt{\ell}}{\sqrt{L}}} \cdot \frac{1}{\sqrt{\ell}} - \frac{1}{2}\frac{\sqrt{\ell}}{1 - \frac{\sqrt{\ell}}{\sqrt{L}}} \cdot \frac{1}{\sqrt{L}}$$

Fam von Decrem

$$f(x) = \frac{a-1}{1 - x^{-a} - \frac{1}{\ell^{a-1}}} \cdot x^{-a} \rightarrow \frac{\frac{1}{2}}{\frac{1}{\sqrt{\ell}} - \frac{1}{\sqrt{L}}} \cdot x^{-\frac{3}{2}}$$

$\alpha = \frac{3}{2}$ $a = \ell, b = L$ $\frac{1}{2}\left(\frac{1}{\sqrt{\ell}} - \frac{1}{\sqrt{L}}\right)^{\ell}$

$$\int_\ell^{\hat{\beta}} \frac{\sqrt{\ell}}{1 - \sqrt{\frac{\ell}{L}}} \cdot \left(\frac{1}{\sqrt{\ell}} - \frac{1}{\sqrt{\beta}}\right) = \left[\frac{1}{1 - \sqrt{\frac{\ell}{L}}} - \frac{\sqrt{\frac{\ell}{\beta}}}{1 - \sqrt{\frac{\ell}{L}}}\right] = \frac{1 - \sqrt{\frac{\ell}{\beta}}}{1 - \sqrt{\frac{\ell}{L}}}$$

Allgemeine Form für kontinuierliche Power laws

a = lower cutoff, b = upper cutoff, α := negative Exponent

$$f(x) = \frac{\alpha-1}{a^{1-\alpha} - b^{1-\alpha}} x^{-\alpha} \quad \text{für } \alpha \neq 1 \qquad f(x) = \frac{1}{x \ln(\frac{b}{a})} \quad \text{für } \alpha = 1$$

$$S(x) = \int_x^\infty f(x')\,dx'$$

$$S(x) = \frac{x^{1-\alpha} - b^{1-\alpha}}{a^{1-\alpha} - b^{1-\alpha}} \quad \text{für } \alpha \neq 1 \qquad S(x) = \frac{\ln(\frac{b}{x})}{\ln(\frac{b}{a})} \quad \text{für } \alpha = 1$$

$$\frac{\sum (k+n)^{-\beta-1}}{\sum (k+a)^{-\beta-1}} \qquad \frac{n^{-\beta}}{\sum (k+a)^{-\beta-1}}$$

Sample values from discrete power law distribution without calculating ζ

Rejection sampling: $u \sim UNI[0,1]$

Want to sample from $f(n) = \frac{1}{\zeta(\alpha)} n^{-\alpha}$

$g \sim \mathcal{E}_g$ ← efficient to sample with inversion method such that $f(x) \leq c \cdot g(x)$

g = truncated power law

$$g = \frac{\alpha-1}{l^{1-\alpha} - L^{1-\alpha}} x^{-\alpha} \mathbb{1}\{l \leq x \leq L\}$$

$$f = \frac{1}{\zeta(\alpha, l, L)} x^{-\alpha} \mathbb{1}\{l \leq x \leq L\}$$

$$\Rightarrow \quad c \geq \frac{f(x)}{g(x)} = \frac{l^{1-\alpha} - L^{1-\alpha}}{(\alpha-1)\,\zeta(\alpha, l, L)}$$

Lösen:

wähle zuerst Nummer $u \sim UNI(l \ldots L)$

dann abspeichern wenn

$$x^{-\alpha} = -\frac{1}{2} x^{-1}$$

Proposed discrete distribution g for rejection sampling

$$g(x) = \int_{x-1}^{x} c \cdot x^{-\alpha}\,dx = \frac{\alpha-1}{a^{1-\alpha} - b^{1-\alpha}} \int_{x-1}^{x} x^{-\alpha} = \frac{\alpha-1}{a^{1-\alpha} - b^{1-\alpha}} \left[-\frac{1}{\alpha-1} x^{-\alpha+1}\right]_{x-1}^{x}$$

$$= \frac{\alpha-1}{a^{1-\alpha} - b^{1-\alpha}} \frac{1}{\alpha-1} \left(x^{-\alpha+1} - (x+1)^{-\alpha+1}\right)$$

$$f(x) = \frac{\alpha-1}{a^{1-\alpha} - b^{1-\alpha}} x^{-\alpha}$$

$$u_{max} = \frac{1}{l^{\alpha-1}}$$

$$y = \text{int}\left(\frac{1}{u^{\frac{1}{\alpha-1}}}\right) = g(u)$$

$$p(Y=y) = \int_y^{y+1} p(g=y)\,dy = \int_u$$

Nehme: $F(x+\frac{1}{2}) - F(x-\frac{1}{2})$

$$(1 - S(x+\tfrac{1}{2})) - (1 - S(x-\tfrac{1}{2}))$$

$$g(x) = S(x-\tfrac{1}{2}) - S(x+\tfrac{1}{2})$$

1. Sample von g

$S, T \in \mathcal{O}$

$SVD(S \wedge T)$

$\wedge = U \Sigma V$

$S \wedge T = \underbrace{SU}_{\mathcal{O}} \Sigma \underbrace{VT}_{\mathcal{O}}$

EtbE Modell 2x2 mit weight matrix

2 units:

$W = \mathbb{1} \cdot \alpha$ für ist 1

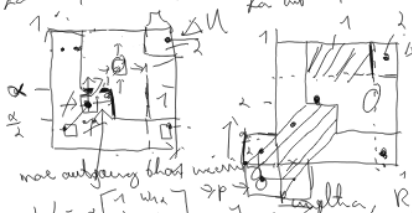

an auf rot. input antwort wenn ↑ oder rechts →

Bild von gibt Größe der nonintuitive based region

more outgoing than incoming

$W = \alpha \begin{bmatrix} 1 & w_{12} \\ w_{21} & 1 \end{bmatrix}$

Jung, Ertugrul, Hertz, Bernasconi, Ott, Zippelius, Renzasconi, Ott, Hertz, Zippelius PRE 2015

Jungen Ertugrul und den resetting durch External drive

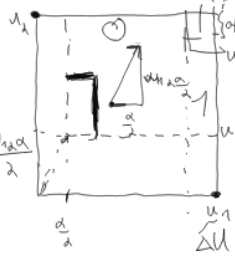

often not ∅ fixed:

$u_1 \pm \frac{\alpha}{2}, u_2 \pm w_{12}\alpha$ 2 fixed

$u_1 \pm w_{21}\alpha, u_2 \pm \frac{\alpha}{2}$

$w_{12} = 0.5, w_{21} = 1$

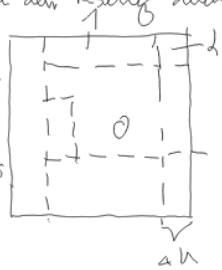

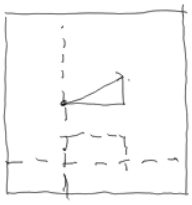

Crucial Questions:

Are states in habituated region still uniformely distributed?

→ check Idea of Transitivity proof

→ Intuition: Random walk flatters distribution compared to starting distribution. Are states often resulting equilibrable if states before are equiprobable

Beide Zusammen?

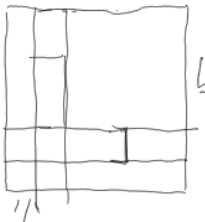

Why nonintuitive?
↳ Higher prob. of leaving opposed to entering!

→ check proof if this is sufficient

TODO: Analyse key numerical experiment!
↳ Write EtbE model to a class!
↳ Wibh options to record

Leap of faith: What about inhibitory units?

$W = \alpha \cdot \begin{bmatrix} 1 & 1 \\ -1 & -1 \end{bmatrix}$?

after firing of units 1

? with 2 fixed

Sternmann das?

Erpenbeck 2017
Towards solving the hard problem of consciousness
SMART → Model
Integrated Information Theory of consciousness

Looks more complicated

$w = \begin{pmatrix} 1 & 2 \\ 3 & 1 \end{pmatrix}$

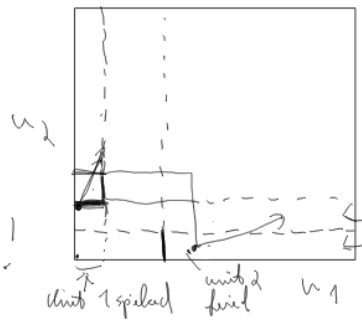

This region → one completely inhabitated or just with lower probability?

This region

unit 1 spiked

unit 2 fixed

Nuneuch!!!

Numerische Passt!

solange wenig Positiv

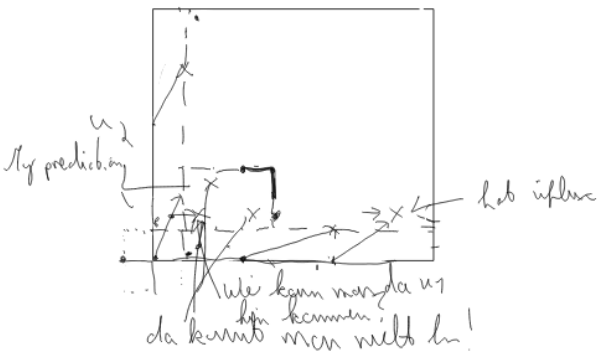

My prediction

hab influence

wie kann man da u_1 hin kommen?

da kommt man nicht hin!

- Computation in a network of cortical areas

Negative coupling weight

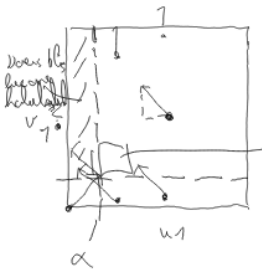

$w = \alpha \cdot \begin{bmatrix} 1 & 1 \\ -1 & 1 \end{bmatrix}$

Das hier ist nicht mehr inhibitorisch! (glaube ich)

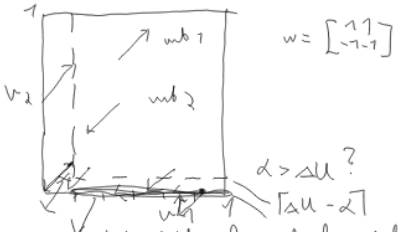

$w = \begin{bmatrix} 1 & 1 \\ -1 & -1 \end{bmatrix}$

$\alpha > \Delta U$?

$\lceil \Delta U - \alpha \rceil$

0 Werte sind sehr wahrscheinlich

Verteilung von v_2 wird diskret!

$0, \dots, k \cdot \Delta U \dots$

$\Rightarrow$ Self inhibition ist blöd!

Calculation of avalanche statistics with positive weight matrix

2x2 Model: Original Model: $W = \mathbb{1} \cdot \frac{\alpha}{2}$

$W = \begin{pmatrix} w_{11} & w_{12} \\ w_{21} & w_{22} \end{pmatrix}$ $U = 1$ ΔU given

Phase space:

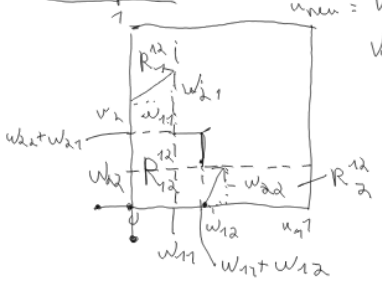

$u_{new} = W \cdot A$

Volumen noninhibitorised region

$w_{11} + w_{22} + w_{12} w_{21}$

Region of avalanche size stabbing with unit 1

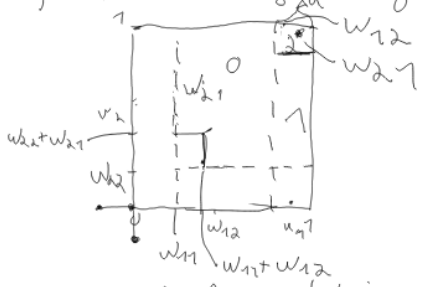

Volume leading to as 1 when u_1 fires

$(1 - w_{22} - w_{21}) \cdot \Delta U$

Volume leading to as of 2 when u_1 fires

$w_{21} \Delta U$

Volume leading to as 0 if u_1 fires

$1 - w_{11} + w_{22} + w_{12} w_{21} - (1 - w_{22}) \Delta U$

Region of avalanche size stabbing with unit 2.

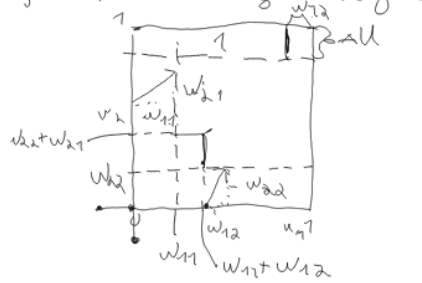

Volume leading to as 1 when u_1 fires

$(1 - w_{11} - w_{12}) \cdot \Delta U$

Volume leading to as of 2 when u_1 fires

$w_{12} \Delta U$

Volume leading to as 0 if u_1 fires

$1 - w_{11} + w_{22} + w_{12} w_{21} - (1 - w_{11}) \Delta U$

Resulting avalanche distribution sizes:

Given that psbabes $\sim$ UNI(Regions) $\rightarrow$ Inhibitated Region

$p_{spike1} = p_{spike2} = 0.5 \leftarrow$ Probability that external input wins unit 1 or 2

$p(avs = 2) = \frac{w_{12} + w_{21}}{2} \Delta U \cdot C$

$p(avs = 1) = \frac{1}{2} \cdot (1 - w_{22} - w_{21}) \Delta U + \frac{1}{2}(1 - w_{11} - w_{12}) \Delta U \cdot C$

$= \left(1 - \frac{\sum_{ij} w_{ij}}{2}\right) \Delta U \cdot C$

$\frac{1}{1 + \frac{p_2}{p_1}}$ $\frac{p_1}{p_1 + p_2}$

$p(avs = 0) = \dots\dots$

Faulty Calculation of Non cortical

$p(avs = 1) = \dfrac{1 - \frac{\sum_{ij} w_{ij}}{2}}{1 - \frac{\sum_i w_{ii}}{2}}$ $p(avs = 2)$ $\dfrac{\frac{w_{12} + w_{12}}{2}}{1 - \frac{\sum_i w_{ii}}{2}}$

— Verallgemeinerung für N units

$\underline{N=3}$

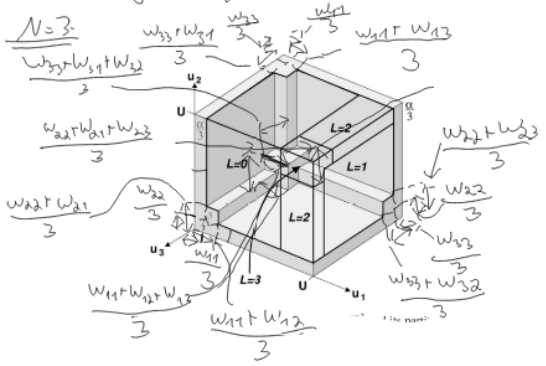

If units 1. spikes:

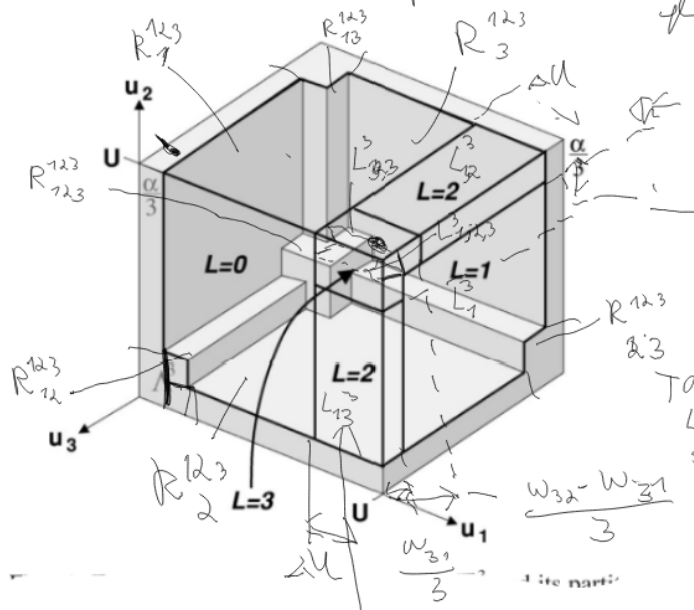

Allgemeine Berechnung der Rechenmenge der avalanche größen:

Bezeichnung: $L^N_{\mathcal{J}}$:= Region of the N-dimensional phase space leading to an avalanche starting with unit i and consecutive spiking of units in $\mathcal{J}$. Size of the resulting avalanche is $1+\mathrm{card}(\mathcal{J})$. Example L^3_{13}.

$$L^N_{i\mathcal{J}} = [\quad] \times \ldots\ldots \times [1-\Delta u, 1] \times \ldots\ldots$$

$$\vdots$$

$$L^3_{123} = [1-\Delta u, u] \times \left[1-\frac{w_{21}}{3}, 1\right] \times \left[1-\frac{w_{31}}{3}, 1\right] \quad \text{Spiking } 1\,2\,3 \quad D=2$$

$$\cup [1-\Delta u, u] \times \left[1-2\frac{w_{21}}{3}, 1-\frac{w_{21}}{3}\right] \times \left[1-\frac{w_{31}}{3}, 1\right] \quad \text{Spiking } 1,3,2 \quad D=3$$

$$\cup [1-\Delta u, u] \times \left[1-\frac{w_{21}}{3}, 1\right] \times \left[1-\frac{2w_{31}}{3}, 1-\frac{w_{31}}{3}\right] \quad \text{Spiking } 1,2,3 \quad D=3$$

$$\mathrm{Vol}(L^3_{123}) = \frac{\Delta u}{9}\left(w_{21}w_{31} + w_{21}w_{31} + w_{21}w_{31}\right)$$

$$L^3_{12} = [1-\Delta u, 1] \times \left[1-\frac{w_{21}}{3}, 1\right] \times \left[\frac{w_{32}}{3}, 1-\frac{2w_{31}}{3}\right]$$

$$\mathrm{Vol}(L^3_{12}) = \Delta u \cdot \frac{w_{21}}{3} \cdot \left(1-\frac{2w_{31}-w_{32}}{3}\right)$$

$$L^3_{13} = [1-\Delta u, 1] \times \left[\frac{w_{23}}{3}, 1-\frac{2w_{21}}{3}\right] \times \left[1-\frac{w_{31}}{3}, 1\right]$$

$$\mathrm{Vol}(L^3_{13}) = \Delta u \cdot \left(1-\frac{2w_{21}-w_{23}}{3}\right)\frac{w_{31}}{3}$$

$$L^3_{1} = [1-\Delta u] \cdot \mathrm{Uninhab}(\underbrace{N-1}_{\text{Dim}}, \underbrace{\{2,3\}}_{\text{Indices of Dims}}, \underbrace{N}_{\text{Normalization factor for weights}})$$

$$R^{\{1,2,3\}}_{\{1,2,3\}}$$

$$\mathrm{Vol}(\mathrm{Uninhab}(\mathcal{J}, N)) = \overset{|\mathcal{J}|\text{-dim}}{\mathrm{Vol}} \text{ of Cube from } \underline{O}_{\mathcal{J}} \text{ to } (W \cdot \mathbb{1}_{\mathcal{J}})_{\mathcal{J}} = \left(\sum_{j\in\mathcal{J}} w_{ij}\right)_{i\in\mathcal{J}}$$

Bei 0 oben noch komplette spikes abziehen

$$\boxed{\mathrm{Vol}(C(\underline{O}_{\mathcal{J}}, (W\cdot\mathbb{1}_{\mathcal{J}})_{\mathcal{J}})) = \prod_{j\in\mathcal{J}}\left(\sum_{i\in\mathcal{J}} w_{ij}\right)}$$

$$\left(\begin{pmatrix} w_{11} & w_{12} & w_{13} \\ w_{21} & w_{22} & w_{23} \\ w_{31} & w_{32} & w_{33} \end{pmatrix} \cdot \begin{pmatrix} 1 \\ 0 \\ 1 \end{pmatrix}\right)_{\{1,3\}} = \begin{matrix} w_{11}+w_{13} \\ w_{31}+w_{33} \end{matrix} = \left(\sum_{j\in\mathcal{J}} w_{ij}\right)_{i\in\mathcal{J}}$$

$$R^{\{1,2,3\}}_{\{1,2,3\}\setminus\{i\}} + \binom{|\mathcal{J}|-1}{|\mathcal{J}|} = |\mathcal{J}| \quad \text{Volumen von Regionen erzeugt durch spikes von } \mathcal{J}_i = \mathcal{J}\setminus\{i\}$$

$$\boxed{\mathrm{Vol}(C^i_{\mathcal{J}_i}) = (1-(W\cdot\mathbb{1}_{\mathcal{J}_i})_i)\cdot \overset{\mathrm{Vol}(C_{\mathcal{J}_i})}{\mathrm{Vol}(C_{\mathcal{J}_i})}}$$

$$\hookrightarrow R^{\{1,2,3\}\setminus\{i\}}_{\{1,2,3\}\setminus\{i\}} \times [0,1]_{\{i\}} = \left(R^{\{1,2,3\}}_{\{1,2,3\}\setminus\{i\}}\right)_{\{i\}} \times R^{\{1,2,3\}\setminus\{i\}}_{\{1,2,3\}\setminus\{i\}} \qquad C(\underline{O}_{\mathcal{J}_i}, (W\cdot\mathbb{1}_{\mathcal{J}_i})_{\mathcal{J}_i}) \times \underbrace{[(W\cdot\mathbb{1}_{\mathcal{J}})_i, 1]}_{\text{Höhe}}$$

$$C_{\mathcal{J}_i} \times [0,1] \searrow [0, (C_{\mathcal{J}_i})_i] \times C_{\mathcal{J}_i}$$

$$R^{\{1,2,3\}}_{\{1,2,3\}\setminus\{i,j\}} + \binom{|\mathcal{J}|-2}{|\mathcal{J}|} \quad \text{Volumen von Regionen eingezogen durch spikes von } \mathcal{J}_{ij} = \mathcal{J}\setminus\{i,j\}$$

$$C(\underline{O}_{\mathcal{J}_{ij}}, (W\cdot\mathbb{1}_{\mathcal{J}_{ij}})_{\mathcal{J}_{ij}}) \times \underset{i,j}{[0,1]^2} \left\{ \setminus C(O_{\mathcal{J}_{ij}}, (W\cdot\mathbb{1}_{\mathcal{J}})_{\{i,j\}}) \right\}$$

$$\setminus \left[(C_{\mathcal{J}})_{\mathcal{J}_{ij}} \cup (C^i_{\mathcal{J}_i})_{\mathcal{J}_{ij}} \cup (C^j_{\mathcal{J}_j})_{\mathcal{J}_{ij}} \right]$$

$$\neq C_{\mathcal{J}} \;!!!$$

$$C_{\mathcal{J}\{i,j\}} \times \underset{i,j}{[0,1]^2} \setminus \Big((C_{\mathcal{J}})_{ij} \times C_{\mathcal{J}\{i,j\}}$$

$$\cup\ (C^i_{\mathcal{J}_i})_{ij} \times C_{\mathcal{J}\{i,j\}}$$

$$(C^j_{\mathcal{J}_j})_{ij} \times C_{\mathcal{J}\{i,j\}}$$

$W > 0$

Rekursiver Aufbau des Nichtüberlappten gebietes

The nonoverlapped region $R^{\{1\dots N\}}$ is generated by the union of nonoverlapped regions R^I_J resulting from all spiking configurations $J = \{j_1, \dots, j_N\} \subset I = \{i_1, \dots, i_N\}$ out of the units I. A spiking configuration (short sc) J contains exactly the indices of spiking neurons and there are $\sum_{j=1}^{N} \binom{j}{N}$ possible sc $J \subset I$.

$$\boxed{\begin{aligned}
&{}^{N}R^I_I = \mathrm{Rect}(Q_I, (W \cdot \mathbb{1}_I)_I) \qquad \mathrm{Vol}(R^I_I) = \prod_{i \in I} \Big(\sum_{j \in I} \underbrace{w_{ij}}_{N}\Big) \\
&R^I_J = {}^{N}R^J_J \times [0,1]_{I \setminus J} \setminus \biguplus_{J \subseteq K \subseteq I} {}^{N}R^J_J \times (R^I_K)_{I \setminus J} \qquad \mathrm{Vol}(R^I_J) = \mathrm{Vol}(R^J_J)\Big(1 - \sum_{J \subset K \subset I} \mathrm{Vol}((R^I_K)_{I/J})\Big) \\
&R^I_I := {}^{|I|}R^I_I \qquad\qquad = \prod_{i \in J} \Big(\sum_{j \in J} \underbrace{w_{ij}}_{N}\Big)\Big(1 - \sum_{J \subset K \subset I} \prod_{i \in I \setminus J} (R^I_K)_i\Big) \\
&R^I = \biguplus_{\emptyset \neq J \subset I} R^I_J
\end{aligned}}$$

Beispiele für $N=2$ und $N=3$

$R^{12}_{12} = \mathrm{Rect}(Q_{12}, (W \mathbb{1}_{12})_{12}) = [0, \frac{w_{11}+w_{12}}{2}] \times [0, \frac{w_{21}+w_{22}}{2}]$, $\mathrm{Vol}({}^{2}R^{12}_{12}) = \frac{(w_{11}+w_{12})(w_{21}+w_{22})}{4}$ ✓

$R^{12}_1 = [0, \frac{w_{11}}{2}] \times [0,1] \setminus [0, \frac{w_{11}}{2}] \times (R^{12}_{12})_2$
$= [0, \frac{w_{11}}{2}] \times [0,1] \setminus [0, \frac{w_{11}}{2}] \times [0, \frac{w_{21}+w_{22}}{2}]$, $\mathrm{Vol}(R^{12}_1) = \frac{w_{11}}{2} \cdot (1 - \frac{w_{21}+w_{22}}{2})$ ✓

$R^{12}_2 = [0,1] \times [0, \frac{w_{22}}{2}] \setminus (R^{12}_{12})_1 \times [0, \frac{w_{22}}{2}]$
$= [0,1] \times [0, \frac{w_{22}}{2}] \setminus [0, \frac{w_{11}+w_{12}}{2}] \times [0, \frac{w_{22}}{2}]$, $\mathrm{Vol}(R^{12}_2) = \frac{w_{22}}{2} \cdot (1 - \frac{w_{11}+w_{12}}{2})$ ✓

$R^{12} = R^{12}_{12} \uplus R^{12}_1 \uplus R^{12}_2 \qquad \mathrm{Vol}(R^{12}) = \frac{(w_{11}+w_{12})(w_{21}+w_{22})}{4} + \frac{w_{11}}{2} \cdot (1 - \frac{w_{21}+w_{22}}{2}) + \frac{w_{22}}{2} \cdot (1 - \frac{w_{11}+w_{12}}{2})$

$= \frac{w_{11}\cancel{w_{21}} + w_{12}\cancel{w_{21}} + w_{12}w_{21} + w_{22}\cancel{w_{22}} + 2w_{11} - \cancel{w_{11}w_{21}} - \cancel{w_{11}w_{22}} + 2w_{22} - w_{22}w_{11} - w_{22}\cancel{w_{12}}}{4}$

$= \frac{w_{12}w_{21} - w_{22}w_{11} + 2(w_{11}+w_{22})}{4}$ ✓

$N=3$

$R^{123}_{123} = \mathrm{Rect}(Q_{123}, (W \cdot \mathbb{1}_{123})_{123}) = [0, \frac{w_{11}+w_{12}+w_{13}}{3}] \times [0, \frac{w_{21}+w_{22}+w_{23}}{3}] \times [0, \frac{w_{31}+w_{32}+w_{33}}{3}]$ $\quad \mathrm{Vol}(R^{123}_{123}) = \frac{(w_{11}+w_{12}+w_{13})(w_{21}+w_{22}+w_{23})(w_{31}+w_{32}+w_{33})}{3^3}$ ✓

$R^{123}_{12} = {}^{3}R^{12}_{12} \times [0,1]_3 \setminus {}^{3}R^{12}_{12} \times (R^{123}_{123})_3$

$= [0, \frac{w_{11}+w_{12}}{3}] \times [0, \frac{w_{21}+w_{22}}{3}] \times [0,1] \setminus [0, \frac{w_{11}+w_{12}}{3}] \times [0, \frac{w_{21}+w_{22}}{3}] \times [0, \frac{w_{31}+w_{32}+w_{33}}{3}]$

$R^{123}_{13} = \dots$ ✓

$R^{123}_{23} = \dots$ ✓

$R^{123}_1 = {}^{3}R^1_1 \times [0,1]_{2,3} \setminus ({}^{3}R^1_1 \times (R^{123}_{123})_{2,3} \cup {}^{3}R^1_1 \times (R^{123}_{12})_{2,3} \cup {}^{3}R^1_1 \times (R^{123}_{13})_{2,3})$ ✓

Allgemeine Konstruktion der Regionen zu gegebenen spiking patterns.

Spiking pattern: Welche Indices spiken in welchem Schritt der Lawine

$p = \underbrace{\overset{g_1 = i}{i_j} \; \overset{g_2}{i_{2_1} \cdots i_{2_{g_2}}} \; \cdots \; \overset{g_D}{i_{D_1} \cdots i_{D_{g_D}}}}$ $\quad \mathrm{Dimension}(p) = D \quad \mathrm{Size}(p) = 1 + \sum_{j=2}^{D} g_j$

Alle Indices einzigartig $\quad i_p \leftarrow$ In p vorkommende Indices, $\quad i_p^c := \{1 \dots N\} \setminus i_p$

$p^\perp := \{ p' \text{ spiking pattern} \mid pp' \text{ spiking pattern}, \mathrm{Size}(pp') = L \}$

$$\boxed{\begin{aligned}
&{}^{N}\tilde{L}_p = [1-\Delta u, 1]_i \times [1 - \underbrace{w_{2j_2 i}}_{N}, 1]_{j=1 \dots g_2} \times [1 - w_{3j_3 i} - \sum_{k=1}^{g_2} \underbrace{w_{3j_3 2_k}}_{N}, 1 - w_{3j_3 i}]_{j=1 \dots g_3} \\
&\quad \times \dots \times [1 - \underbrace{w_{Dj i}}_{N} - \sum_{k=1}^{D-1} \sum_{l=1}^{g_k} \underbrace{w_{Dj k_l}}_{N}, 1 - \underbrace{w_{Dj i}}_{N} - \sum_{k=1}^{D-2} \sum_{l=1}^{g_k} \underbrace{w_{Dj k_l}}_{N}]_{j=1 \dots g_D} \\
&{}^{N}L_p = {}^{N}\tilde{L}_p \times [0,1]_{i_p^c} \setminus \Big({}^{N}\tilde{L}_p \times {}^{N}R^{i_p^c} \uplus \Big(\biguplus_{p \in p^\perp} {}^{N}\tilde{L}_{pp'} \Big) \Big) \\
&\mathrm{Vol}({}^{N}\tilde{L}_p) = \Delta u \cdot \prod_{j=1}^{g_2} \underbrace{w_{2j;i}}_{N} \cdot \prod_{d=3}^{D} \prod_{j=1}^{g_d} \sum_{k=1}^{g_{d-1}} \underbrace{w_{dj;d-1_k}}_{N}
\end{aligned}}$$

$N=2$, $N=3$ per Hand, ($N=4$ generisch am Laptop optional)

${}^{2}L_{1;2} = [1-\Delta u, 1]_1 \times [1 - \frac{w_{21}}{2}]$ ✓ $\quad L^2_1 = [1-\Delta u] \times [0,1] \setminus ([1-\Delta u, 1] \times [0, \frac{w_{21}}{2}] \uplus [1-\Delta u, 1] \times [1 - w_{21}, 1]) = [1-\Delta u, u] \times [\frac{w_{21}}{2}, 1 - \frac{w_{21}}{2}]$ ✓

$L^3_{1;2,3} = [1-\Delta u, 1]_1 \times [1 - \frac{w_{21}}{3}]_2 \times [1 - \frac{w_{31}}{3}]_3$ ✓

$L^3_{1;2;3} = [1-\Delta u, 1] \times [1 - \frac{w_{21}}{3}] \times [1 - \frac{w_{21}}{3} - \frac{w_{32}}{3}, 1 - \frac{w_{31}}{3}]$ ✓

$L^3_{1;3;2} = [1-\Delta u, 1] \times [1 - \frac{w_{31}}{3} - \frac{w_{23}}{2}, 1 - \frac{w_{31}}{3}] \times [1 - \frac{w_{31}}{3}, 1]$ ✓

$L^3_{1;2} = [1-\Delta u, 1] \times [1 - \frac{w_{21}}{3}, 1] \times [0,1] \setminus ([1-\Delta u, 1] \times [1 - \frac{w_{21}}{3}, 1] \times [0, \frac{w_{23}}{3}] \uplus L^3_{1;2,3} \uplus L^3_{1;2;3})$ ✓

$L^3_{1;3} = [1-\Delta u, 1] \times [0,1] \times [1 - \frac{w_{31}}{3}, 1] \setminus ([1-\Delta u, 1] \times [0, \frac{w_{32}}{3}] \times [1 - \frac{w_{31}}{3}, 1] \uplus L^3_{1;2,3} \uplus L^3_{1;3;2})$ ✓

$L^3_1 = [1-\Delta u, 1] \times [0,1] \times [0,1] \setminus ([1-\Delta u, 1] \times {}^{3}R^{\{2,3\}} \uplus J_{1;2} \uplus J_{1;3} \uplus J_{1;2,3} \uplus J_{1;2;3} \uplus J_{1;3;2})$ ✓

Rekursive Konstruktion der Bereiche, die nach einander von units i zur Lawinen der größen 1-N führen

TODO

If units 1 spikes:

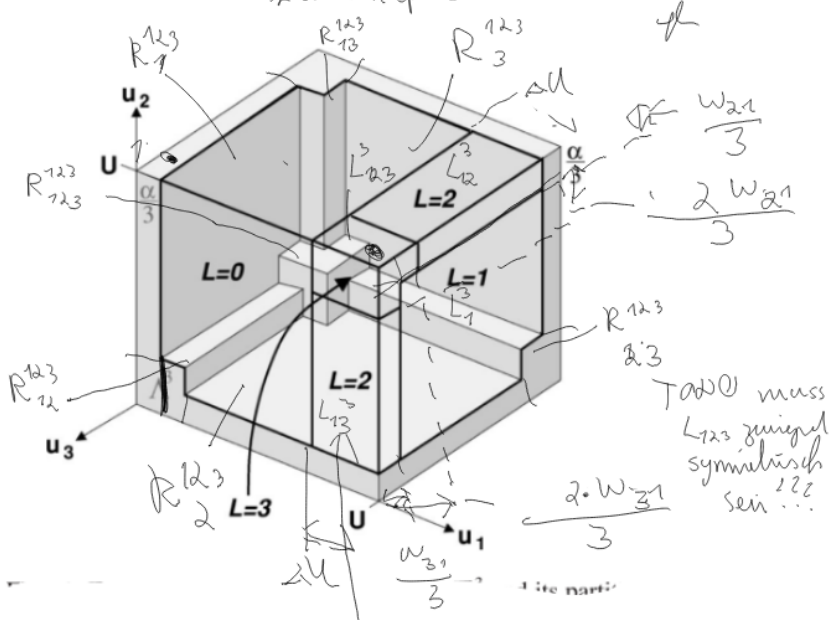

TODO muss L_{123} zwingend symmetrisch sein???

Allgemeine Berechnung der Flächeninhalte der avalanche größen:

Bezeichnung: L^N_{iJ} := Region of the N-dimensional phase space leading to an avalanche starting with unit i and consecutive spiking of units in J. Size of the resulting avalanche is 1+card(J). Example L^3_{13}.

$L^N_{iJ} = [1-\Delta U]_i \times$

$L^N_{i,2,1-w_{21}} = [1-\Delta U, U]_i \times [1-$

Koordinaten einer Spike pattern p

$p = i_0 \underbrace{i_{1_1} \; i_{1_{g_1}}}_{g_1} j \; i_{2_1} \cdots i_{2_{g_2}} j \cdots j \; i_{L_1} \cdots i_{L_{g_L}}$

$\tilde{L}_p$

$L^N_p = [1-\Delta U, 1] \times [1-w_{1;1}]_{i=1..g_1} \times \left[1-w_{L;1} - \sum_{j=1}^{L-1} \sum_{k=1}^{g_j} w_{L;j_k} \; 1-w_{L;1} - \sum_{j=1}^{L-1} \sum_{k=1}^{g_j} w_{L;j_k}\right]_{i=1..g_L} \times [0,1]$

Indices die in p nicht vorkommen

$\setminus \left(\tilde{L}^N_p \times R^N_{p^\perp} \cup \biguplus_{p^\perp} L^N_{pp^\perp} \right)$

Pattern die p zu einem der Muster V vervollständigen

„Bereiche müssen nach Spiking pattern aufgeteilt werden

$L^3_{1,2,3;} \uplus L^3_{1,2;3} \uplus L^3_{1,3;2} = L$

$L^N_{i,J_1 j_1 \ldots j_{L-1}} = [1-\Delta U, U]_i \times [1-w_{j_1 i}, 1]_{j_1} \times [1-w_{j_2 i} - w_{j_2 j_1}, 1-w_{j_2 i}] \times \cdots [1-w_{j_N i} - \cdots - w_{j_N j_{N-1}}, 1-\cdots-w_{j_N j_{N-2}}]$

$L^{5,3} = L^{5,3}_{1;2,3} \uplus L^5_{1;2;3,3} \uplus L^5_{1;3;2}$

$L^3_{1;2,3} = [1-\Delta U, 1] \times [1-w_{21}, 1]_2 \times [1-w_{31}, 1]$

$L^3_{1;2;3} = [1-\Delta U, 1]_1 \times [1-w_{21}, 1]_2 \times [1-w_{32}-w_{32}, 1-w_{31}]$

$L^3_{1;3;2} = [1-\Delta U, 1]_1 \times [1-w_{23}-w_{22}, 1-w_{23}] \times [1-w_{31}, 1]$

Wie kann man alle spiking patterns auflisten?

$L^{N,k}_{S,2}$ = 1. Schritt: Liste alle möglichen 2 elementen subsets auf. Angabe $\binom{2}{5}$ $\binom{k}{N}$

N-1 Iteration: 1;5;7;8 → alle permutationen durch

N-2 Iteration: 15;7;8 — $\binom{2}{3}$ mögl. Plätze erstes Element

17;5;8 — $(3-2)!$ permutationen der übrigen

1;57;8

N-3 Iteration: 857;1 — $\binom{3}{3}$ mögl. Plätze erstes $(3-3)!$ permutationen für Rest

Kurze spiking patterns:

$L^3_1 = [1-\Delta U, 1] \times \left(1-R^3_{\{a,3\}}\right) \setminus \biguplus_J L^3_{1;J}$

$\setminus [1-w_{21}, 1] \times \left(1-R^3_{\{2,3\}}\right)$

$\setminus [1-w_{31}, 1] \times \left(1-R^3_{\{2,3\}}\right)$

(Overlap $[1-\Delta U] \times [1-w_{21}, 1] \times [1-w_{31}, 1]$)

$L^3_{1;2} = [1-\Delta U, U] \times [1-w_{21}, 1] \times \left[{}^1R^3, 1-w_{31}\right)$

$\times \left[{}^1R^3, 1\right] \setminus L^3_{1;2;3}$

Avalanche size 4 spiking patterns

52 mögliche spiking patterns für Layer der größe 4 der größe N

Allgemeines Verfahren zur Auflistung aller spiking patterns

1. Liste alle möglichen Längen des Layers auf.
Minimale Länge: L → 1 Element stabil, im 2. Schritt alle restlichen
Maximale Länge: N → In jedem Schritt 1 Element spiking.
2. Für jede Länge L liste alle Gruppierungen auf, die viele Elemente in gleichem Schritt spiken
1. Sch. für große der ersten Gruppe: 1
Anzahl [illegible] gruppierungsmöglichkeiten auf N-1 gleichende Möglichkeiten
Anzahl möglicher Gruppierungen von N Möglichkeiten in g_1 Gruppen:
3. Für jede Gruppierung $g = g_1 \dots g_L$ $\sum_{i=1}^{L} g_i = N$ liste alle möglichen Zuordnungen der N Elemente auf.

$\binom{g_1}{L}$ Möglichkeiten für Zuweisung zu g_1

$\binom{g_2}{L-g_1}$ " zu g_2

$\vdots$

$\Rightarrow \prod_{i=1}^{L} \binom{g_i}{L-\sum_{k=1}^{i-1} g_k}$ Mögliche Zuordnungen.

2 Gruppen

$4 = 4 \cdot \binom{3}{3}$

1 - 3
1; 234
2; 134
3; 124
4; 123

$4 \cdot \binom{4}{3}$

3 Gruppen

$4 = 4 \cdot 3 \cdot \binom{2}{2}$

1 - 1 - 2
1; 2; 34
1; 3; 24
1; 4; 23
2; 3; 14
2; 4; 13
2; 1; 34
3; 4; 12
3; 1; 24
3; 2; 14
4; 1; 23
4; 2; 13
4; 3; 12

$4 \cdot 3 \cdot \binom{4}{2} = 12$ Möglichkeiten

$4 = 4 \cdot \binom{3}{3} \cdot 1$

1 - 2 - 1
1; 23; 4
1; 24; 3
1; 34; 2
2; 13; 4
2; 14; 3
2; 34; 1
3; 12; 4
3; 14; 2
3; 24; 1
4; 12; 3
4; 13; 2
4; 23; 1

$4 \cdot \binom{3}{3} \cdot 1 = 12$ Möglichkeiten

$\binom{2}{4}$ Verteilung für 4 große Gruppe

2 - 1 - 1
12; 3; 4
12; 4; 3
13; 2; 4
13; 4; 2
14; 2; 3
14; 3; 2
23; 1; 4
23; 4; 1
24; 1; 3
24; 3; 1
34; 1; 2
34; 2; 1

$4 \cdot 2 \cdot 1 = 12$ Möglichkeiten

4 Gruppen

1 - 1 - 1 - 1
1; 2; 3; 4
2; 1; 3; 4
3; 1; 2; 3
4; 1; 2; 3

Alle 4! = 24 Permutationen

1 Avalanche step always has size 1

$H_g(5,3)$

$H_g(3,3) = 1$

$H_g(4,3)$: 3;1;3;4;5
1;2;34;5
1;23;4;5
12;3;4;5

5 - 3 = 2 Möglichkeiten

Rekursionsformel:

$H_g(N,1) = 1$

$H_g(N,N-1) = N-1$

Rekursionsformel

$H_g(N,g) = \sum_{i=1}^{g-1} H_g(N-i, g-1)$

Bsp.: $H_g(5,3) = H_g(4,2) + H_g(3,2)$
$= 4$
$H_g(3,1) + H_g(2,1)$

Allgemeine Berechnung von Regionen die zu Spike pattern p führen

Koordinaten eines Spike patterns p

$$p = \underbrace{i_0 i_1 \ldots i_{g_1} j}_{g_1} \; i_{2_1} \ldots i_{2_{g_2}} j \ldots j \; i_{L_1} \ldots i_{L_{g_L}} \qquad \tilde{L}_p$$

$$\tilde{L}_p = [1-\Delta u, 1] \times [1-w_{1,g_1}]_{i=1..g_1} \times \left[1-w_{L,i}-\sum_{j=1}^{L-1}\sum_{k=1}^{g_j} w_{L,ijk},\; 1-w_{L,i}-\sum_{j=1}^{L-1}\sum_{k=1}^{g_j} w_{L,ijk}\right]_{i=1..g_L} \times [0,1]_{p^\perp} \setminus \left(\tilde{L}_p \cap \tilde{R}^{p^\perp} \cup \biguplus_{p^\perp} \tilde{L}_{pp^\perp}\right)$$

Indices die in p nicht vorkommen

Paddons die p zu einem der Muster (vielleicht auch mehrere) vervollständigen

$$\boxed{Vol(\tilde{L}_p) = \Delta u \cdot \prod_{k=1}^{L}\prod_{i=1}^{g_k} w_{k,i}\left(1 - Vol(\tilde{R}^{p^\perp})\right) - \sum_{p^\perp} Vol(\tilde{L}_{pp^\perp})}$$

$$\prod_{i=1}^{g_1} w_{1,i} \cdot \prod_{k=2}^{}$$

selbst diff leg eine möglich

effizientere Berechnung:

$$\tilde{L}_p = \tilde{L}_p \times [0,1]_{p^\perp} \setminus \left(\tilde{L}_p \times \tilde{R}^{p^\perp} \cup \left(\bigcup_{p \in p^\perp} \hat{L}^{p}_{N} \times \left[1-w_{p1}-\sum_{j=1}^{L-1}\sum_{k=1}^{g_j} w_{pjk},\; 1\right]_p \setminus \hat{L}_{Np} \times \left[1-w_{p1}-\sum_{j=1}^{L-1}\sum_{k=1}^{g_j} w_{pjk},\; 1\right]_{p \in p^\perp}\right)\right)$$

$$Vol(\tilde{L}_p) = \Delta u \cdot \prod_{k=1}^{L}\prod_{i=1}^{g_k} w_{k,i}\left(1 - Vol(\tilde{R}^{p^\perp}) - \sum \ldots ?\right)$$

erstmal alnige Formel nehmen

Vereinfachung: $W = const \cdot \mathbb{1} \Rightarrow W_{ij} = \alpha$

Noninhabitated Region: Volumes of regions corresponding to spiking configurations of the same size are equal $(\sum w_{ij})$

$$\tilde{R}^I_I = Rect(\Omega_I, (W \cdot \mathbb{1}_I)_I) \qquad Vol(R^I_I) = \prod_{i \in I}\Big(\underbrace{\sum_{j \in I} w_{ij}}_{N}\Big)$$

$$R^I_J = \tilde{R}^J_J \times [0,1]_{I \setminus J} \setminus \biguplus_{J \subseteq K \subseteq I} \tilde{R}^J_J \times (R^I_K)_{I \setminus J} \qquad Vol(\tilde{R}^I_J) = Vol(\tilde{R}^J_J)\Big(1 - \sum_{J \subset K \subset I} Vol((\tilde{R}^I_K)_{I/J})\Big)$$

$$R^I_I := {}^{|I|}R^I_I \qquad = \prod_{i \in J}\Big(\underbrace{\sum_{j \in J} w_{ij}}_{N}\Big)\Big(1 - \sum_{J \subset K \subset I} \prod_{i \in I \setminus J} (\tilde{R}^I_K)_i\Big)$$

$$R^I = \biguplus_{\emptyset \neq J \subset I} R^I_J$$

$$\tilde{R}^I_I \Rightarrow \left[0, \frac{|I| \cdot \alpha}{N}\right] \qquad Vol(\tilde{R}^I_I) = \left(\frac{|I|\alpha}{N}\right)^{|I|}$$

$$Vol(\tilde{R}^I_J) = \left(\frac{|J|\alpha}{N}\right)^{|J|}\Big(1 - \sum_K$$

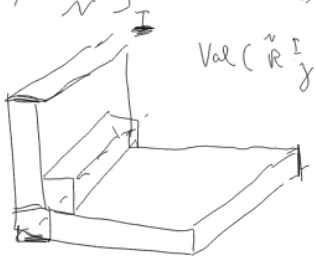

${}^6R^{\{456\}}$ ← aber verschieben durch Einführung der ersten {1,2,3} auf {456}

$${}^6R^{1\ldots6}_{123} = {}^6R^{123}_{123}$$

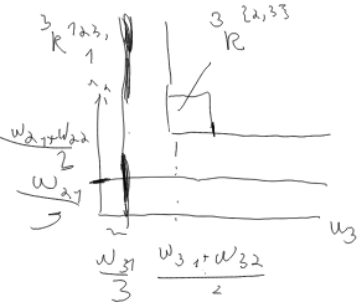

Schneide $\biguplus_{J \subset K \subseteq I} \tilde{R}^J_J \times (R^I_K)_{I \setminus J}$

durch $\tilde{R}^{I \setminus J}$ ← aber dann nichts verschieben

0-Punkt

$$\Downarrow$$

$$\tilde{R}^{J,I}$$

$$ {}^{N}R^{I}_{I} = \mathrm{Rect}(Q_I, (W\cdot \mathbb{1}_I)_I) \qquad \mathrm{Vol}(R^{I}_{I}) = \prod_{i\in I}\Big(\sum_{j\in I}\frac{w_{ij}}{N}\Big) $$

$$ {}^{2}R^{I}_{J} = {}^{N}R^{J}_{J}\times[0,1]_{I\setminus J} \setminus \biguplus_{J\subseteq K\subseteq I} {}^{N}R^{J}_{J}\times(R^{I}_{K})_{I\setminus J} \qquad \mathrm{Vol}(R^{I}_{J}) = \mathrm{Vol}(R^{J}_{J})\Big(1-\sum_{J\subset K\subset I}\mathrm{Vol}((R^{I}_{K})_{I/J})\Big) $$

$$ R^{I}_{I} := {}^{|I|}R^{I}_{I} \qquad = \prod_{i\in J}\Big(\sum_{j\in J}\frac{w_{ij}}{N}\Big)\Big(1-\sum_{J\subset K\subset I}\prod_{i\in I\setminus J}(R^{I}_{K})_i\Big) $$

$$ R^{I} = \biguplus_{\emptyset\neq J\subset I} R^{I}_{J} $$

$$ {}^{N}R^{P,I}_{I} = \mathrm{Rect}\big((W\cdot\mathbb{1}_P)_I, (W\mathbb{1}_{P,I})_I\big) \qquad \mathrm{Vol}_I({}^{N}R^{P,I}_{I}) = \prod_{i\in I}\Big(\sum_{j\in I}\frac{w_{ij}}{N} - \sum_{p\in P}\frac{w_{ip}}{N}\Big) $$

$$ {}^{N}R^{P,I}_{J} = {}^{N}R^{P,J}_{J}\times \mathrm{Rect}\big((W\cdot\mathbb{1}_P)_{I\setminus J}, \mathbb{1}_{I\setminus J}\big) \setminus {}^{N}R^{P,J}_{J}\times\Big({}^{N}R^{P\cup J, I\setminus J} \cup \prod_{i\in I\setminus J}\Big[0, \sum_{p\in P} w_{ip}\Big]_i \times [0,1]_{(I\setminus J)\setminus\{i\}}\Big) $$

Overlap gleich Null

$$ {}^{N}R^{P,P} = \emptyset $$

Volume für this should be much easier for example $\Big[0, \sum_{p\in P} w_{ip}\Big]_{i\in I\setminus J}$ (Counted N times, so subtract it N-1 times)

$$ \mathrm{Vol}_I({}^{N}R^{P,I}_{J}) = \prod_{i\in J}\Big(\sum_{j\in J}\frac{w_{ij}}{N}\Big)\prod_{k\in I\setminus J}\Big(1-\sum_{k\in P} w_{k}\Big)\cdot \mathrm{Vol}_{I\setminus J}({}^{N}R^{P\cup J, I\setminus J}) - \sum_{i\in I\setminus J}\Big(\sum_{p\in P} w_{ip}\Big) + (|I\setminus J|-1)\prod_{i\in I\setminus J}\Big(\sum_{p\in P} w_{ip}\Big) $$

weil schon verschoben durch p

Kommen dann wieder noch weiteren Spitzen von Nachbarn J

Buffering gegen zwischen um J verschiedene Unterregionen

Vereinfachung für $w = \alpha\mathbb{1}$

$$ \mathrm{Vol}_I({}^{N}R^{P,I}_{J}) = \Big(\frac{|J|}{N}\alpha\Big)^{|J|}\cdot\Big[\Big(1-\frac{|P|\alpha}{N}\Big)^{|I\setminus J|} - \mathrm{Vol}_{I\setminus J}({}^{N}R^{P\cup J, I\setminus J}) - |I\setminus J|\frac{|J|\alpha}{N} + (|I\setminus J|-1)\Big(\frac{\alpha}{N}\Big)^{|I\setminus J|}\Big] $$

$$ \mathrm{Vol}({}^{3}R^{1,2}) = \mathrm{Vol}({}^{3}R^{1,2}_{2}) + 2\,\mathrm{Vol}({}^{3}R^{1,2}_{1}) $$

$$ = \Big(\frac{2\alpha}{N}\Big)^2 + 2\cdot\frac{\alpha}{N}\Big(1-\frac{\alpha}{N}\Big) - \frac{\alpha}{N} - \frac{\alpha}{N} $$

$$ \frac{4\alpha^2}{N^2} + \frac{2\alpha}{N} - \frac{6\alpha^2}{N^2} = \frac{2\alpha}{N} - \frac{2\alpha^2}{N^2} $$

$$ \mathrm{Vol}({}^{2}R^{0,2}) = \mathrm{Vol}({}^{2}R^{0,2}_{2}) + 2\cdot\mathrm{Vol}({}^{2}R^{0,2}_{1}) $$

$$ = \Big(\frac{2\alpha}{N}\Big)^2 + 2\cdot\Big(\frac{\alpha}{N}\cdot\Big(1-2\frac{\alpha}{N}\Big)\Big) \qquad N=2 $$

$$ = 4\frac{\alpha^2}{N^2} + 2\frac{\alpha}{N} - \frac{4\alpha^2}{N^2} = \frac{2\alpha}{N} \overset{N=2}{=} \alpha $$

$$ \mathrm{Vol}({}^{3}R^{0,3}) = \mathrm{Vol}({}^{3}R^{0,3}_{3}) + 3\,\mathrm{Vol}({}^{3}R^{0,3}_{2}) + 3\cdot\mathrm{Vol}({}^{3}R^{0,3}_{1}) $$

$$ \Big(\frac{3\alpha}{N}\Big)^3 + 3\cdot\Big(\Big(\frac{2\alpha}{N}\Big)^2\Big(1-\underbrace{\mathrm{Vol}({}^{N}R^{2,1})}_{1}\Big) - \frac{2\alpha}{N}\Big) + 3\cdot\Big(\frac{\alpha}{N}\cdot\Big(1-\mathrm{Vol}({}^{3}R^{1,2}) - 2\frac{\alpha}{N} + \Big(\frac{\alpha}{N}\Big)^2\Big) $$

$$ \Big(1-\frac{2\alpha}{N}\Big) \quad \frac{2\alpha}{N} $$

$$ + 3\cdot\frac{\alpha}{N}\cdot\Big(1-\Big(\frac{2\alpha}{N} - \frac{2\alpha^2}{N^2}\Big) - 2\frac{\alpha}{N} + \Big(\frac{\alpha}{N}\Big)^2 $$

$$ 3\cdot\frac{\alpha}{N}\cdot\Big(1 - \frac{4\alpha}{N} + \frac{3\alpha^2}{N^2}\Big) $$

$$ \cancel{27\frac{\alpha^3}{N^3}} + 12\frac{\alpha^2}{N^2} - \cancel{36\frac{\alpha^3}{N^3}} + 3\frac{\alpha}{N} - 12\frac{\alpha^2}{N^2} + \cancel{8\frac{\alpha^3}{N^3}} $$

$$ \mathrm{Vol}({}^{4}R^{0,4}) = \mathrm{Vol}({}^{4}R^{0,4}_{4}) + 4\,\mathrm{Vol}({}^{4}R^{0,4}_{3}) + 6\,\mathrm{Vol}({}^{4}R^{0,4}_{2}) + 4\cdot\mathrm{Vol}({}^{4}R^{0,4}_{1}) $$

$$ \mathrm{Vol}({}^{4}R^{0,4}_{4}) = \Big(\frac{4\alpha}{N}\Big)^4 $$

$$ \mathrm{Vol}({}^{4}R^{0,4}_{3}) = ($$

Another recursive description of the permutahedral volume
↳ avoid use of P arguments while still explicitly involve lower-dim subregions

Idea: 1d: ${}^{\nu}R^{P}_{1} =$ nothing happens $\quad Vol({}^{\nu}R^{P}_{\{i\}}) = Vol({}^{\nu}R^{\emptyset}_{\{i\}})$

2d: ${}^{\nu}R^{P2} = 2\cdot {}^{\nu}R^{1}$

3d: ${}^{\nu}R^{P3} = 3\cdot {}^{\nu}R^{2}$

$Vol({}^{\nu}R^{P2}) = Vol({}^{\nu}R^{2}) - \prod_{i\in I}\left(\sum_{p\in P} w_{ip}\right)\cdot Vol({}^{\nu}R^{I\setminus\{i\}})$

diese Formel stimmt nur bis $n=3$!!!
Wenn man in 2 dim. Teil rausschneidet mit allen 3 seiten sind hier mehr sonst $3\frac{\alpha^3}{\nu^3}$ unterschlagen

${}^{\nu}R^{I} = \biguplus_{\emptyset\subset J\subseteq I} {}^{\nu}R^{I}_{J} \qquad {}^{\nu}R^{PI} = (W\mathbb{1}_P)_I + {}^{\nu}R^{I}\setminus\left[1-\sum_{p\in P} w_{ip}, 1\right]_i \times {}^{\nu}R^{I\setminus\{i\}}$

${}^{\nu}R^{I}_{J} = {}^{\nu}R^{J}_{J}\times[0,1]_{I\setminus J}\setminus\left({}^{\nu}R^{J}_{J}\times {}^{\nu}R^{J\setminus I}_{J} \cup \bigcup_{i\in I\setminus J}\left[0,\sum_{p\in J} w_{ip}\right]_i \times [0,1]_{(I\setminus J)\setminus\{i\}}\right)$ ← overlap given by $(|I\setminus J|-1)$ times $\left[0,\sum_{p\in J} w_{ip}\right]_{(I\setminus J)}$

$Vol({}^{\nu}R^{I}_{J}) = Vol({}^{\nu}R^{J}_{J})\cdot\left(1 - Vol({}^{\nu}R^{J\setminus I}) - \sum_{i\in I\setminus J}\left(\sum_{p\in J} w_{ip}\right) + (|I\setminus J|-1)\left(\prod_{i\in I\setminus J}\sum_{p\in J} w_{ip}\right)\right)$

$= \prod_{i\in J}\left(\sum_{j\in J} w_{ij}\right)\cdot\left(1 - Vol({}^{\nu}R^{I\setminus J}) + \sum_{i\in I\setminus J}\left(\sum_{p\in J} w_{ip}\right)\cdot Vol({}^{\nu}R^{I\setminus(J\cup\{i\})}) - \sum_{i\in I\setminus J}\left(\sum_{p\in J} w_{ip}\right) + (|I\setminus J|-1)\left(\prod_{i\in I\setminus J}\sum_{p\in J} w_{ip}\right)\right)$

$$\boxed{= \prod_{i\in J}\left(\sum_{j\in J}\frac{w_{ij}}{\nu}\right)\cdot\left(1 - Vol({}^{\nu}R^{I\setminus J}) - \left(1 - Vol({}^{\nu}R^{I\setminus(J\cup\{i\})})\right)\right)\cdot\sum_{i\in I\setminus J}\left(\sum_{p\in J}\frac{w_{ip}}{\nu}\right) + (|I\setminus J|-1)\left(\prod_{i\in I\setminus J}\sum_{p\in J}\frac{w_{ip}}{\nu}\right)}$$

Jetzt Vereinfachung für $W = \alpha\cdot\mathbb{1}$

Nur Volumen von grösse von I, J abhängig $\quad I = |I|,\ J = |J|\quad |I\setminus J| = I - J$

$Vol({}^{\nu}R^{I}) = \sum_{J=1}^{I}\binom{I}{J} Vol({}^{\nu}R^{I}_{J})$

$Vol({}^{\nu}R^{I}_{I}) = \left(\frac{I\alpha}{\nu}\right)^{I}$

$Vol({}^{\nu}R^{I}_{J}) = \left(\frac{J\alpha}{\nu}\right)^{J}\left(1 - Vol({}^{\nu}R^{I-J}) - (1 - Vol({}^{\nu}R^{I-J-1}))\frac{(I-J)J\alpha}{\nu} + (I-J-1)\left(\frac{J\alpha}{\nu}\right)^{I-J}\right.$

$Vol({}^{\nu}R^{1}) = \frac{\alpha}{\nu}$

$Vol({}^{\nu}R^{2}) = 2\cdot Vol({}^{\nu}R^{2}_{1}) + \left(\frac{2\alpha}{\nu}\right)^{2}$

$= 2\cdot\left(\frac{\alpha}{\nu}\right)\left(1 - \frac{\alpha}{\nu} - (1-0)\frac{\alpha}{\nu} + \cancel{0\cdot\frac{\alpha}{\nu}}\right) + \left(\frac{2\alpha}{\nu}\right)^{2}$

$= 2\left(\frac{\alpha}{\nu}\right)\left(1 - 2\frac{\alpha}{\nu}\right) + \left(\frac{2\alpha}{\nu}\right)^{2}$

$= \frac{2\alpha}{\nu} - \cancel{\frac{4\alpha^2}{\nu^2} + \frac{4\alpha^2}{\nu^2}}$

$Vol({}^{\nu}R^{3}) = 3\cdot Vol({}^{\nu}R^{3}_{1}) + 3\,Vol({}^{\nu}R^{3}_{2}) + \left(\frac{3\alpha}{\nu}\right)^{3}$

$= 3\left(\frac{\alpha}{\nu}\left(1 - \frac{2\alpha}{\nu} - (1 - \frac{\alpha}{\nu})\frac{2\alpha}{\nu} + \left(\frac{\alpha}{\nu}\right)^{2}\right)\right) + 3\cdot\left(\left(\frac{2\alpha}{\nu}\right)^{2}\cdot\left(1 - \frac{\alpha}{\nu} - (1-0)\frac{2\alpha}{\nu}\right)\right) + \left(\frac{3\alpha}{\nu}\right)^{3}$

$= \frac{3\alpha}{\nu}\left(1 - \frac{4\alpha}{\nu} + \frac{3\alpha^2}{\nu^2}\right) + \frac{3\cdot 4\alpha^2}{\nu^2}\left(1 - \frac{3\alpha}{\nu}\right) + \frac{3^3\alpha^3}{\nu^3}$

$= \frac{3\alpha}{\nu} - \cancel{\frac{12\alpha^2}{\nu^2}} + \cancel{\frac{12\alpha^2}{\nu^2}} + \frac{3^2\alpha^3}{\nu^3} - \cancel{\frac{3^2\cdot 4\alpha^3}{\nu^3}} + \cancel{\frac{3^3\alpha^3}{\nu^3}}$

$= \frac{3\alpha}{\nu}$

$Vol({}^{\nu}R^{4}) = 4\,Vol({}^{\nu}R^{4}_{1}) + 6\,Vol({}^{\nu}R^{4}_{2}) + 4\,Vol({}^{\nu}R^{4}_{3}) + \left(\frac{4\alpha}{\nu}\right)^{4}$

$= 4\left(\frac{\alpha}{\nu}\left(1 - \frac{3\alpha}{\nu} - (1 - \frac{2\alpha}{\nu})\frac{3\alpha}{\nu} + 2\left(\frac{\alpha}{\nu}\right)^{3}\right)\right) + 6\left(\left(\frac{2\alpha}{\nu}\right)^{2}\left(1 - \frac{2\alpha}{\nu} - (1 - \frac{\alpha}{\nu})\frac{4\alpha}{\nu} + \left(\frac{2\alpha}{\nu}\right)^{2}\right)\right) + 4\left(\left(\frac{3\alpha}{\nu}\right)^{3}\left(1 - \frac{\alpha}{\nu} - (1-0)\frac{3\alpha}{\nu}\right)\right) + \left(\frac{4\alpha}{\nu}\right)^{4}$

$= \frac{4\alpha}{\nu}\left(1 - \frac{6\alpha}{\nu} + \frac{6\alpha^2}{\nu^2} + \frac{2\alpha^3}{\nu^3}\right) + 6\left(\frac{4\alpha^2}{\nu^2}\left(1 - \frac{6\alpha}{\nu} + \frac{8\alpha^2}{\nu^2}\right) + \frac{4\cdot 3^3\alpha^3}{\nu^3}\left(1 - \frac{4\alpha}{\nu}\right) + \frac{4^4\alpha^4}{\nu^4}\right)$

$= \frac{4\alpha}{\nu} - \frac{4\cdot 6\alpha^2}{\nu^2} + \frac{6\cdot 4\alpha^2}{\nu^2} + \frac{4\cdot 6\cdot\alpha^3}{\nu^3} - \frac{6\cdot 6\cdot 4\alpha^3}{\nu^3} + \frac{4\cdot 3^3\alpha^3}{\nu^3} + \frac{4\cdot 2\cdot\alpha^4}{\nu^4} + \frac{6\cdot 4\cdot 8\alpha^4}{\nu^4} - \frac{4^2\cdot 3^3\alpha^4}{\nu^4} + \frac{4^4\alpha^4}{\nu^4}$

$= \frac{4\alpha}{\nu} + \frac{\alpha^3}{\nu^3}(4\cdot 6 - 6^2\cdot 4 + 3^3\cdot 4) + \frac{\alpha^4}{\nu^4}(4\cdot 2 + 6\cdot 4^2\cdot 2 - 4^2 3^3 + 4^4)$

→ $4\cdot 3$ missing

Overlap of $\bigcup\left[0,\sum_{p\in J} w_{ip}\right]_i \times [0,1]_{I\setminus(J\cup\{i\})}$

□ - ○ Overlap

$[0,w_1]\times[0,w_2]\times[0,1]$
Overlap $[0,w_1]\times[0,1]\times[0,w_3]$ — Overlap $[0,w_1]\times[0,w_2]\times[0,w_3]$
$[0,1]\times[0,w_2]\times[0,w_3]$

$-\frac{3\alpha^2}{\nu^2} + 1\frac{\alpha^3}{\nu^3}$

2mal abgezogen wird

mit 3 mal abgezogen

$$\mathrm{Vol}({}^{\nu}R^4) = 4\,\mathrm{Vol}({}^{\nu}R^4_1) + 6\,\mathrm{Vol}({}^{\nu}R^4_2) + 4\,\mathrm{Vol}({}^{\nu}R^4_3) + \left(\frac{4\alpha}{\nu}\right)^4$$

$$= 4\left(\frac{\alpha}{\nu}\left(1-\frac{3\alpha}{\nu}-\left(1-\frac{2\alpha}{\nu}\right)\frac{3\alpha}{\nu}+2\left(\frac{\alpha}{\nu}\right)^3\right)\right) + 6\left(\left(\frac{2\alpha}{\nu}\right)^2\left(1-\frac{2\alpha}{\nu}-\left(1-\frac{\alpha}{\nu}\right)\frac{4\alpha}{\nu}+\left(\frac{2\alpha}{\nu}\right)^2\right)\right) + 4\left(\left(\frac{3\alpha}{\nu}\right)^3\left(1-\frac{\alpha}{\nu}-(1-0)\frac{3\alpha}{\nu}\right)\right) + \left(\frac{4\alpha}{\nu}\right)^4$$

$$= \frac{4\alpha}{\nu}\left(1-\frac{6\alpha}{\nu}+\frac{6\alpha^2}{\nu^2}+\frac{3\alpha^2}{\nu^2}-\frac{12\alpha^3}{\nu^3}\right) + 6\left(\frac{4\alpha^2}{\nu^2}\left(1-\frac{6\alpha}{\nu}+\frac{8\alpha^2}{\nu^2}\right)+\frac{4\cdot 3^3\alpha^3}{\nu^3}\left(1-\frac{4\alpha}{\nu}\right)+\frac{4^4\alpha^4}{\nu^4}\right.$$

$$= \frac{4\alpha}{\nu} - \frac{4\cdot 6\alpha^2}{\nu^2} + \frac{6\cdot 4\alpha^2}{\nu^2} + \frac{4\cdot 9\cdot\alpha^3}{\nu^3} - \frac{6\cdot 6\cdot 4\alpha^3}{\nu^3} + \frac{4\cdot 3^3\alpha^3}{\nu^3} - \frac{4\cdot\alpha^4}{\nu^4} + \frac{6\cdot 4\cdot 8\alpha^4}{\nu^4} - \frac{4^2\cdot 3^3\alpha^4}{\nu^4} + \frac{4^4\alpha^4}{\nu^4}$$

$$= \frac{4\alpha}{\nu} + \frac{\alpha^3}{\nu^3}\left(4\cdot 9 - 6^2\cdot 4 + 3^3\cdot 4\right) + \frac{\alpha^4}{\nu^4}\left(-4 + 6\cdot 4^2\cdot 2 - 4^2\cdot 3^3 + 4^4\right)$$

→ 4·3 missing

$[\nu, w_3]$

R^2

R^{12}_2 ↗ dem Seite ist

↑

alles was $[0,1]$ in Richtung u_1 hat

R^{12}_{12} ← hat keine Entwege!

alles was $[0,1]$ in Richtung u_1 und u_2 hat wurde zwei abgezogen und muss wieder addiert werden

R^{13}

alles was $[0,1]$ in Richtung u_1 hat ⇒ R^{12}_1 ⇒ Seite ist R^1

$${}^{\nu}\tilde{V}^{I\,P}_{i} = \left[1-\sum_{p\in P}\frac{w_{i,p}}{\nu},1\right]_I$$

$$\mathrm{Vol}({}^{\nu}\tilde{V}^{I\,P}_{i}) = \prod_{i\in I}\left(\sum_{p\in P}\frac{w_{i,p}}{\nu}\right)$$

$${}^{\nu}V^{I\,P}_{J} = {}^{\nu}V^{J\,P}_{J}\times[0,1]_{I\setminus J}\setminus V^{J\,P}_{J}\times V^{I\setminus J,P}$$

$$\mathrm{Vol}({}^{\nu}V^{I\,P}_{J}) = \mathrm{Vol}(V^{J\,P}_{J})\left(1-\mathrm{Vol}(V^{I\setminus J,P})\right)$$

$$\mathrm{Vol}({}^{\nu}V^{I\,P}) = \biguplus_{J\subset I} V^{I\,P}_{J}$$

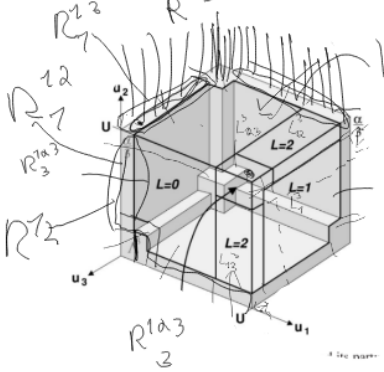

$${}^{\nu}\tilde{R}^{I\,P} = \bigcup_{J\subset I}{}^{\nu}\tilde{V}^{I\,P}_{J}\cap{}^{\nu}R^{I}$$

$$\tilde{V}^{I\,P}_{J}\cap{}^{\nu}R^{I} = \tilde{V}^{I\,P}_{J}\cap R^{I\,P}_{I\setminus J}$$

mitt schön.

$R^{13}_1 \cap R^{12}_1$

schnitt Achsen

in Achsen

w_{21} → Rest gegeben durch Verschiebung nach oben und links

2d

2 Linien →

Overlap der 2 Linien an einer Ecke

2 Linien gegeben durch: R^2 und R^1

→ Overlap über 12

$R^{2\setminus 1}\cap R^{2\setminus 3}$

$= R^0 = 0$

In 4d?

3 Flächen → 4 Würfel

Overlap der 3 Flächen an 3 Kanten → Overlap der 4 Würfel an 6 Flächen

6

1 4, 1 3, 12, 2 3, 2 4, 3 4

3 Flächen gegeben durch

R^{12}, R^{13}, R^{23}

R^1, R^2, R^3

4 Würfel gegeben durch

R^{234}, R^{134}, R^{124}, R^{123}

R^{34}, R^{24}, R^{23}, R^{14}, R^{13}, R^{12}

Frage: Habe ich immer nur paarweise Interaktionen oder auch höhere?

↳ Prinzip das gleiche wie beim Overlap von $[0,w_i]_i\times[0,1]_{I\setminus i}$

Allgemeines Volumen der Puffer.

$$\bigcup_{i\in I\setminus J}\left[0,\sum_{p\in P} w_{ip}\right]_i \times [0,1]^{(I\setminus J)\setminus\{i\}}$$

$$\overset{\shortparallel}{\bigcup} I\setminus P,\ P$$

$$V^{\neg\alpha,P}_{\neg\alpha,P} = \left[0,\sum_{p\in P} w_{\neg p}\right]\times\left[0,\sum_{p\in P} w_{\alpha p}\right] \qquad V^{I}_{I}P = \left[0,\sum_{p\in P} w_{ip}\right]_{i\in I}$$

$$\mathrm{Vol}(V^{I}_{I}P) = \prod_{i\in I}\left(\frac{\sum_{p\in P} w_{ip}}{N}\right)$$

$$V^{I}_{J}P = V^{JP}_{J}\times[0,1]^{I\setminus J}\setminus V^{JP}_{J}\times V^{I\setminus J,P}$$

$$\mathrm{Vol}(V^{I}_{J}P) = \mathrm{Vol}(V^{JP}_{J})\left(1-\mathrm{Vol}(V^{I\setminus J,P})\right)$$

$$\mathrm{Vol}(V^{I}P) = \biguplus_{\emptyset\subset J\subseteq I} V^{I}_{J}P$$

Geschlossene Form für Hebbes $W = \alpha\cdot\mathbb{1}$

$$\mathrm{Vol}(V^{W}_{1}P) = \frac{P\alpha}{N}$$

$$\mathrm{Vol}(V^{2P}) = 2\mathrm{Vol}(V^{2P}_{1}) + \mathrm{Vol}(V^{2P}_{2})$$
$$= 2\frac{P\alpha}{N}\left(1-\frac{P\alpha}{N}\right) + \left(\frac{P\alpha}{N}\right)^2$$
$$= \frac{2P\alpha}{N} - \left(\frac{P\alpha}{N}\right)^2 =$$

$$\mathrm{Vol}(V^{3P}) = 3\mathrm{Vol}(V^{3P}_{1}) + 3\mathrm{Vol}(V^{3P}_{2}) + \mathrm{Vol}(V^{3P}_{3})$$
$$= 3\cdot\frac{P\alpha}{N}\left(1-\frac{2P\alpha}{N}+\left(\frac{P\alpha}{N}\right)^2\right) + 3\cdot\left(\frac{P\alpha}{N}\right)^2\left(1-\frac{P\alpha}{N}\right) \cancel{+\left(\frac{P\alpha}{N}\right)}$$
$$= \frac{3P\alpha}{N} - 6\left(\frac{P\alpha}{N}\right)^2 + 3\left(\frac{P\alpha}{N}\right)^2 + 3\left(\frac{P\alpha}{N}\right)^3 - 3\left(\frac{P\alpha}{N}\right)^3 + \left(\frac{P\alpha}{N}\right)^3$$
$$= 3\frac{P\alpha}{N} - 3\left(\frac{P\alpha}{N}\right)^2 + \left(\frac{P\alpha}{N}\right)^3$$

$$\mathrm{Vol}(V^{4P}) = 4\cdot\mathrm{Vol}(V^{4P}_{1}) + 6\,\mathrm{Vol}(V^{4P}_{2}) + 4\,\mathrm{Vol}(V^{4P}_{3}) + \mathrm{Vol}(V^{4P}_{4})$$
$$= 4\frac{P\alpha}{N}\left(1-3\frac{P\alpha}{N}+3\left(\frac{P\alpha}{N}\right)^2-\left(\frac{P\alpha}{N}\right)^3\right) + 6\left(\frac{P\alpha}{N}\right)^2\left(1-2\frac{P\alpha}{N}+1\left(\frac{P\alpha}{N}\right)^2\right) + 4\left(\frac{P\alpha}{N}\right)^3\left(1-\frac{P\alpha}{N}\right) + \left(\frac{P\alpha}{N}\right)^4$$
$$= 4\frac{P\alpha}{N} - 4\cdot 3\left(\frac{P\alpha}{N}\right)^2 + 6\left(\frac{P\alpha}{N}\right)^2 + 4\cdot 3\left(\frac{P\alpha}{N}\right)^3 - 6\cdot 2\cdot\left(\frac{P\alpha}{N}\right)^3 + 4\left(\frac{P\alpha}{N}\right)^3 - 4\left(\frac{P\alpha}{N}\right)^4 + 6\left(\frac{P\alpha}{N}\right)^4 - 4\left(\frac{P\alpha}{N}\right)^4 + \left(\frac{P\alpha}{N}\right)^4$$
$$= 4\frac{P\alpha}{N} + (-4\cdot 3+6)\left(\frac{P\alpha}{N}\right)^2 + (4\cdot 3-6\cdot 2+4)\left(\frac{P\alpha}{N}\right)^3 + (-4+6-4+1)\left(\frac{P\alpha}{N}\right)^4$$
$$= 4\frac{P\alpha}{N} - 6\left(\frac{P\alpha}{N}\right)^2 + 4\left(\frac{P\alpha}{N}\right)^3 - \left(\frac{P\alpha}{N}\right)^4$$

Wie ergeben sich die Koeffizienten rekursiv aus den vorherigen?

$$\mathrm{Vol}(V^{NP}) = c^N_1\left(\frac{P\alpha}{N}\right) + c^N_2\left(\frac{P\alpha}{N}\right)^2 \cdots$$

$c^1_1 = 1$

$c^2_1 = 2 \qquad c^2_2 = -\binom{2}{1}c^1_1 + \binom{2}{2}$

$c^3_1 = 3 \qquad c^3_2 = -\binom{3}{1}c^2_1 + \binom{3}{2} \qquad c^3_3 = -\binom{3}{1}c^2_2 - \binom{3}{2}c^1_1 + \binom{3}{3}$

Hypothese.

$$c^N_i = \binom{N}{i} - \sum_{j=1}^{i-1}\binom{N}{j}c^{N-j}_{i-j}$$

Überprüfung $N=4$:

$c^4_1 = 4$ ✓ $c^4_2 = \binom{4}{2} - \binom{4}{1}c^3_1$ / $c^4_3 = \binom{4}{3} - \binom{4}{1}c^3_2 - \binom{4}{2}c^2_1$ ✓ $c^4_4 = 1 - \binom{4}{1}c^3_3 - \binom{4}{2}c^2_2 - \binom{4}{1}c^1_1$

$c^5_1 = 5 \quad c^5_2 = \binom{5}{2} - \binom{5}{1}c^4_1 = 10 - 5\cdot 4 = -10 \quad c^5_3 = \binom{5}{3} - \binom{5}{1}c^4_2 - \binom{5}{2}c^3_1 = 10 - 5\cdot(-6) - 10\cdot 3 = 10 \quad c^5_4 = \binom{5}{4} - \binom{5}{1}c^4_3 - \binom{5}{2}c^3_2 - \binom{5}{3}c^2_1 = 5 - 5\cdot 4 - 10(-3) - 10\cdot 2 = -5 \quad c^5_5 = 1 - \binom{5}{1}c^4_4 - \binom{5}{2}c^3_3 - \binom{5}{3}c^2_2 - \binom{5}{4}c^1_1 = 1 - 5(-1) - 10\cdot 1 - 10(-1) - 5 = 1$

1
2 -1
3 -3 1
4 -6 4 -1
5 -10 10 -5 1

Induktionshypothese

$$c^N_i = (-1)^{i+1}\binom{N}{i}$$

Induktionsanfang ✓

$$c^N_i = \binom{N}{i} - \sum_{j=1}^{i-1}\binom{N}{j}c^{N-j}_{i-j} = \binom{N}{i} - \sum_{j=1}^{i-1}\binom{N}{j}(-1)^{(i-j+1)}\binom{N-j}{i-j}$$

$$\mathrm{Vol}(V^{I}P) = 1 - \left(1-\frac{P\alpha}{N}\right)^{I}$$ ← Easy ...

Allgemeine Konstruktion der Regionen zu gegebenen spiking patterns.

Spiking pattern: Welche Indices spiken in welchem Schritt der Avalanche

$$p = \underbrace{i_1}_{g_1=1}\ \underbrace{i_{2_1}\cdots i_{2_{g_2}}}_{g_2}\ \cdots\ \underbrace{i_{D_1}\cdots i_{D_{g_D}}}_{g_D}$$

$\mathrm{Duration}(p) = D \qquad \mathrm{Size}(p) = 1 + \sum_{j=2}^{D} g_j$

Alle Indices einzeln $\qquad i_p \leftarrow$ In p vorkommende Indices, $\quad i_p^c := \{1..N\}\setminus i_p$

$$p^{\perp} := \{p' \text{ spiking pattern} \mid pp' \text{ spiking pattern}, \mathrm{Size}(pp') = L\}$$

$$\tilde{L}_p = [1-\Delta U, 1]_i \times [1-w_{2_1 i}, 1]_{j=1..g_2} \times [1-w_{3_1 i}-\sum_{k=1}^{g_2} w_{3_j 2_k}, 1-w_{3_1 i}]_{j=1..g_3} \times\cdots\times \left[1-w_{D_1 i}-\sum_{k=1}^{D-1}\sum_{l=1}^{g_k} w_{D_j k_l}, 1-w_{D_1 i}-\sum_{k=1}^{D-2}\sum_{l=1}^{g_k} w_{D_j k_l}\right]_{j=1..g_D}$$

$$L_p = \tilde{L}_p \times \left([0, 1-\sum_{k=1}^{D-1}\sum_{l=1}^{g_k} w_{j k_l}]_{j\in i_p^c} \setminus \Delta^{i_p^c}(W, 1-\sum_{k=1}^{D-1}\sum_{l=1}^{g_k} w_{j k_l})_{j\in i_p^c}\right)$$

$$\mathrm{Vol}(\tilde{L}_p) = \Delta U\cdot\prod_{j=1}^{g_2} w_{2_j i}\cdot\prod_{d=3}^{D}\prod_{j=1}^{g_d}\sum_{k=1}^{g_{d-1}} w_{d_j\, d-1_k}$$

$${}^{N}R^{P,I}_{I} = \mathrm{Rect}\left((W\cdot\mathbb{1}_P)_I, (W\mathbb{1}_{P\setminus I})_I\right) \qquad \mathrm{Vol}_I({}^{N}R^{P,I}_{I}) = \prod_{i\in I}\left(\sum_{j\in I}\frac{w_{ij}}{N} - \sum_{p\in P}\frac{w_{ip}}{N}\right)$$

$${}^{N}R^{P,I}_{J} = {}^{N}R^{P,J} \times \mathrm{Rect}\left((W\cdot\mathbb{1}_P)_{I\setminus J}, \mathbb{1}_{I\setminus J}\right) \setminus {}^{N}R^{P,J} \times \left({}^{N}R^{P\cup J, I\setminus J} \cup \prod_{i\in I\setminus J}\left[0, \sum_{p\in P} w_{ip}\right]_i \times [0,1]_{(I\setminus J)\setminus\{i\}}\right)$$

Overlap gleich lang

$${}^{N}R^{P,P} = \emptyset$$

↳ Volume for this should be much easier for example $[0, \sum_{p\in P} w_{ip}]_{i\in I\setminus J}$ (Counted N times, so subtract it $N-1$ times)

$$\mathrm{Vol}_I({}^{N}R^{P,I}_{J}) = \prod_{i\in J}\left(\sum_{j\in J}\frac{w_{ij}}{N}\right)\left(\prod_{k\in I\setminus J}\left(1-\sum_{p\in P} w_{kp}\right) - \mathrm{Vol}_{I\setminus J}({}^{N}R^{P\cup J, I\setminus J}) - \sum_{i\in I\setminus J}\left(\sum_{p\in P} w_{ip}\right) + (|I\setminus J|-1)\prod_{i\in I\setminus J}\left(\sum_{p\in P} w_{ip}\right)\right)$$

weil schon verschoben durch p

Lauter dim. rejoin nach weiteren Spiken von Neuronen J

Buffer gegen zuviele um J verschiedene Unterregionen

Vereinfachung für $W = \alpha\mathbb{1}$

$$\mathrm{Vol}_I({}^{N}R^{P,I}_{J}) = \left(\frac{|J|}{N}\alpha\right)^{|J|}\cdot\left[\left(1-\frac{|P|\alpha}{N}\right)^{|I\setminus J|} - \mathrm{Vol}_{I\setminus J}({}^{N}R^{P\cup J, I\setminus J}) - |I\setminus J|\frac{|J|\alpha}{N} + (|I\setminus J|-1)\left(\frac{\alpha}{N}\right)^{|I\setminus J|}\right]$$

$$\mathrm{Vol}({}^{2}R^{0,2}) = \mathrm{Vol}({}^{2}R^{0,2}_{2}) + 2\cdot\mathrm{Vol}({}^{2}R^{0,2}_{1})$$

$$= \left(\frac{2\alpha}{N}\right)^2 + 2\cdot\left(\frac{\alpha}{N}\cdot\left(1-2\frac{\alpha}{N}\right)\right) \quad N=2$$

$$\mathrm{Vol}({}^{3}R^{1,3}) = \mathrm{Vol}({}^{3}R^{1,2}_{2}) + 2\,\mathrm{Vol}({}^{3}R^{1,2}_{1})$$

$$= \left(\frac{2\alpha}{N}\right)^2 + 2\cdot\frac{\alpha}{N}\left(\left(1-\frac{\alpha}{N}\right) - \frac{\alpha}{N} - \frac{\alpha}{N}\right)$$

$$\frac{4\alpha^2}{N^2} + \frac{2\alpha}{N} - \frac{6\alpha^2}{N^2} = \frac{2\alpha}{N} - \frac{2\alpha^2}{N^2}$$

$$(W\mathbb{1}_P)_I + {}^{N}R^{I}\setminus\left[1-\sum_{p\in P} w_{ip}, 1\right]_i \times {}^{N}R^{I\setminus\{i\}}$$

$${}^{N}R^{I,P} = (W\mathbb{1}_P)_I + {}^{N}R^{I}\setminus\bigcup_{\emptyset\subset J\subseteq I}(\dots)$$

TODO Morgen: Ordentlich diesen Ansatz verfolgen

→ Rekursionsformel hin schreiben

→ Nur P bei ${}^{N}R^{I}$ und nicht jedem einzelnen

$${}^{N}R^{I,P} = (W\mathbb{1}_P)_I + {}^{N}R^{I}\setminus\bigcup_{\emptyset\subset J\subseteq I}{}^{N}R^{J}_{J}\times\left[1-\sum_{p\in P} w_{ip}, 1\right]_{I\setminus J}$$ ← stimmt sogar 0o

↳ wie das eindeutig so einfach?

↳ Mal mal wieder doch

↳ War ja aber auch erkältet

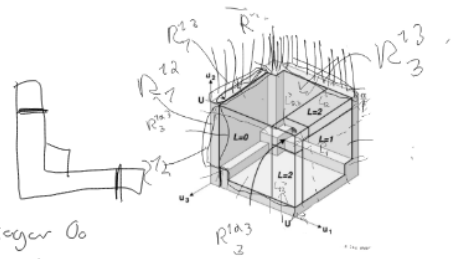

Remove intersection of two rectangles

$[\dots(i_l, i_u), \dots]$, $[\dots(j_l, j_u)\dots]$

Build array on axes ~~sub~~ grillwise

Equal pos $(p_i)_{i=1\dots}$ has volume

$$\prod_i (A_i[p_{i+1}] - A_i[p_i])$$

$$\mathrm{Vol}({}^{\sim}V_{\mathcal{L}}^{P,I}) = \prod_{i\in I}\Big(\sum_{p\in P} \frac{w_{ip}}{N}\Big)$$

$${}^{\sim}V_{\mathcal{J}}^{P,I} = {}^{\sim}V_{\mathcal{J}}^{P} \times [0,1]_{I\setminus\mathcal{J}} \setminus V_{\mathcal{J}}^{P,\mathcal{J}} \times V^{P,I\setminus\mathcal{J}}$$

$$\mathrm{Vol}({}^{\sim}V_{\mathcal{J}}^{P,I}) = \mathrm{Vol}({}^{\sim}V_{\mathcal{J}}^{P})\,(1-\mathrm{Vol}(V^{P,I\setminus\mathcal{J}}))$$

$$\mathrm{Vol}({}^{\sim}V^{P,I}) = \biguplus_{\emptyset\subset\mathcal{J}\subseteq I} {}^{\sim}V_{\mathcal{J}}^{P,I}$$

$${}^{\sim}R^{I} = \biguplus_{\emptyset\subset\mathcal{J}\subseteq I} {}^{\sim}R_{\mathcal{J}}^{I}$$

$${}^{\sim}R^{I} \setminus \Big[1-\sum_{p\in P} w_{i;p},\,1\Big]_i \times {}^{\sim}R^{I\setminus\{i\}}$$

$$\bigcup_{i\in I\setminus\mathcal{J}} \Big[0,\sum_{p\in\mathcal{J}} w_{i;p}\Big]_i \times [0,1]_{(I\setminus\mathcal{J})\setminus\{i\}}$$

$${}^{\sim}R^{P,I} = (W\mathbb{1}_P)_I + {}^{\sim}R^{I} \setminus \biguplus_{\emptyset\subset K\subseteq I} {}^{\sim}R_K^{K}\cdot\Big[1-\sum_{p\in P} w_{i;p},\,1\Big]_{I\setminus P}$$

$${}^{\sim}R_{\mathcal{J}}^{I} = {}^{\sim}R_{\mathcal{J}}^{\mathcal{J}} \times [0,1]_{I\setminus\mathcal{J}} \setminus \Big({}^{\sim}R_{\mathcal{J}}^{\mathcal{J}} \times {}^{\sim}R^{\mathcal{J},I\setminus\mathcal{J}} \cup {}^{\sim}V^{\mathcal{J},I\setminus\mathcal{J}}\Big)$$

← analog gilt hier $\Big[0,\sum_{p\in\mathcal{J}} w_{i;p}\Big]_{(I\setminus\mathcal{J})}$

$$\mathrm{Vol}({}^{\sim}R_{\mathcal{J}}^{I}) = \mathrm{Vol}({}^{\sim}R_{\mathcal{J}}^{\mathcal{J}})\cdot\big(1-\mathrm{Vol}({}^{\sim}R^{\mathcal{J},I\setminus\mathcal{J}}) - \mathrm{Vol}({}^{\sim}V^{\mathcal{J},I\setminus\mathcal{J}})\big)$$

$$= \Big(\prod_{i\in\mathcal{J}}\Big(\sum_{j\in\mathcal{J}} w_{ij}\Big)\Big)\Big(1-\mathrm{Vol}({}^{\sim}R^{I\setminus\mathcal{J}}) + \sum_{\emptyset\subset K\subseteq I\setminus\mathcal{J}} \mathrm{Vol}({}^{\sim}R_K^{K})\cdot\Big[1-\sum_{p\in\mathcal{J}} w_{i;p},1\Big]_{I\setminus\mathcal{J}\setminus K}\Big)$$

$$= \Big(\prod_{i\in\mathcal{J}}\Big(\sum_{j\in\mathcal{J}} \frac{w_{ij}}{N}\Big)\Big)\Big(1-\mathrm{Vol}({}^{\sim}R^{I\setminus\mathcal{J}}) + \sum_{\emptyset\subset K\subseteq I\setminus\mathcal{J}}\Big(\prod_{i\in K}\sum_{j\in K}\frac{w_{ij}}{N}\Big)\Big(\prod_{i\in I\setminus\mathcal{J}\setminus K}\sum_{p\in\mathcal{J}} w_{ip}\Big) = 1 + \prod_{i\in I\setminus\mathcal{J}}\Big(1-\sum_{p\in\mathcal{J}} w_{ip}\Big)\Big)$$

Vereinfachung für konstante gewichtsmatrizen $W = \alpha\cdot\mathbb{1}$

$$\mathrm{Vol}({}^{\sim}R^{I}) = \sum_{\mathcal{J}=1}^{I}\binom{I}{\mathcal{J}}\cdot\mathrm{Vol}({}^{\sim}R_{\mathcal{J}}^{I})$$

$$= \sum_{\mathcal{J}=1}^{I}\binom{I}{\mathcal{J}}\Big(\frac{\mathcal{J}\alpha}{N}\Big)^{\mathcal{J}}\Big(1-\mathrm{Vol}({}^{\sim}R^{I-\mathcal{J}}) + \sum_{K=1}^{I-\mathcal{J}}\binom{I-\mathcal{J}}{K}\Big(\frac{K\alpha}{N}\Big)^{K}\Big(\frac{\mathcal{J}\alpha}{N}\Big)^{I-\mathcal{J}-K} = 1 + \Big(1-\frac{\mathcal{J}\alpha}{N}\Big)^{I-\mathcal{J}}\Big)$$

Rekursionsformel

$$\mathrm{Vol}({}^{\sim}R^{1}) = \frac{\alpha}{N}$$

$$\mathrm{Vol}({}^{\sim}R^{2}) = 2\cdot\Big(\frac{\alpha}{N}\Big(1-\frac{\alpha}{N}\Big) + \cancel{\binom{1}{1}\Big(\frac{\alpha}{N}\Big)\Big(\frac{\alpha}{N}\Big)^{0}} - \cancel{1} + \cancel{\Big(1-\frac{\alpha}{N}\Big)^{1}}\Big)$$

$$= 2\frac{\alpha}{N}\Big(1-\frac{2\alpha}{N}\Big)$$

If only 1 spikes:

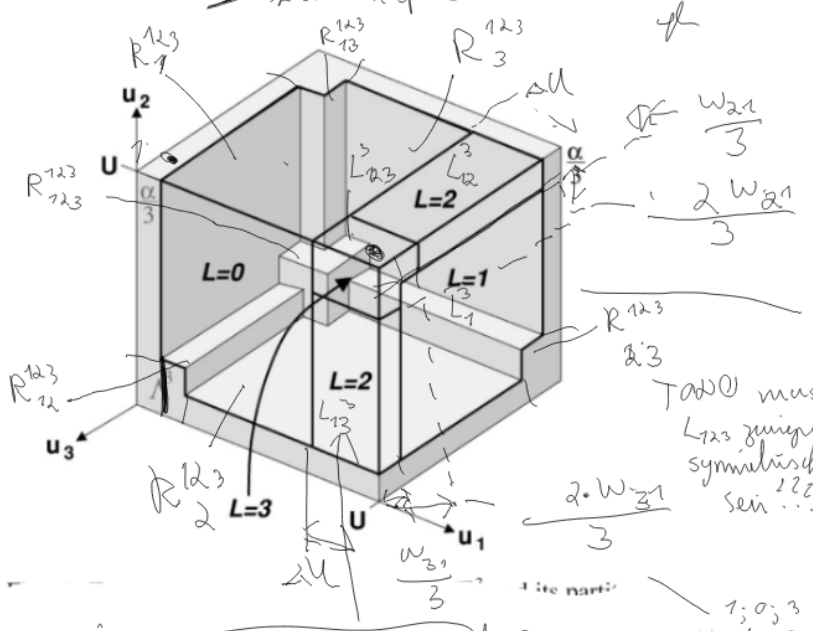

$\frac{w_{21}}{3}$

kann man in mein

$\frac{2\,w_{21}}{3}$

$L_1 \Rightarrow$ Was muss in dem 2 und 3 abgezogen werden (zusätzlich zu Vorinhalt und region?

Unit 2 doch nicht von 1 mitgerissen werden

Unit 3 doch ebenfalls nicht von unit 1 mitgerissen werden...

TODO muss L_{123} zwingend symmetrisch sein???

$\frac{2\cdot w_{31}}{3}$

1; 0; 3

vs 1; 0, 3

~~Limits~~ of non-overlapping hypercubes

Overlap of axes-aligned hypercubes

1; 2; 3

- algebr. 1; 2, 3

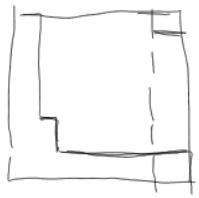

Limits on axes

Axis

1 $\frac{w_{11}}{3}$, $\frac{w_{12}}{3}$,

1; 2; 3 < 1; 2, 3

$\not<$ 1; 3; 2 → Allgemeiner:

Warum nicht? Welches L ist in welch anderem enthalten?

bei 1; 2; 3 geht es um

1. Einschränkung: für $L_1 < L_2$ muss $\mathrm{size}(L_1) \le \mathrm{size}(L_2)$?

Beispiel: $L_{1,2;3;4}$ und $L_{1;2,3}$ → Was muss hier entlang 4 abgezogen werden?

1 ⇒ ΔU

2 ⇒ noch nach ΔU und 1

mit 4 doch nach der spiking Sequenz 1; 2,3 nicht mitgerissen werden.

Effekt der Spiking Sequenz auf unit 4: $(w_{41}+w_{42}+w_{43})$

→ Komponente 4 weiter unten

$L_{1;2,3} \Rightarrow$ Komponente 4 weiter unten!

Also: Komponente 3 weiter oben

Recursive Calculation of noninhabited Region for $W > 0$. (The original EHE model corresponds to $W_{ij} = \frac{\alpha}{N}$)

The noninhabited region by definition is the region, where the density of states eventually vanishes due to the internal spiking of the EHE model. Each unit that crosses the threshold during an avalanche causes a subsequent movement on the n-dimensional toroidal Phase space by the vector $W \cdot e_i$, where e_i is the unit vector in direction i. Denoting the set of units that spiked during the avalanche as I, the total internal activation that the units received is given by $W \cdot \mathbb{1}_I$, where $\mathbb{1}_I = \sum_{i \in I} e_i$. Note that as each unit can fire at most once during an avalanche, there are $2^{|N|}-1$ possible spiking configurations I corresponding to nonempty subsets of N.

The entries $(W \cdot \mathbb{1}_I)_I$ of the activation generated by the spiking configuration I give a lower bound for the values of the units I after the avalanche and thus generate a noninhabited region

$$\Gamma^N(W,U,I) = [0, \sum_{j \in I} w_{ij}]_{i \in I} \times [0, U_i]_{i \in N \setminus I} \quad (1), \text{ where } [l_1,u_1]_{I_1} \times \dots \times [l_n,u_n]_{I_n} := \bigotimes_{i=1}^{N} [l_i,u_i]_{I_i} := \{x \in \mathbb{R}^N \mid (x)_{I_1} \in [l_1,u_1]^{|I_1|}, \dots, (x)_{I_n} \in [l_n,u_n]^{|I_n|}\}$$

for disjoint subs $(I_i)_{i=1\dots n}$ and $\biguplus_{i=1}^{n} I_i = \{1 \dots N\}$.

$[l_i,u_i]_{i \in I}$ is shorthand for $\bigotimes_{i \in I} [l_i,u_i]_{\{i\}}$

The total noninhabited region is thus the union of the noninhabited region induced by all spiking configurations

$$\Lambda^N(W,U) = \bigcup_{\emptyset \subset I \subset N} \Gamma^N(W,U,I). \quad (2)$$

To get a recursive decomposition of this region, from which it's volume can be calculated, the following steps are performed:

1. The phase space $[0,U]_N$ is decomposed into nonoverlapping hyperrectangles
2. It is observed that the Γ areas overlapping with a hyperrectangle contain a rescaled, lower dimensional Λ
3. The intersections of the Γ's with the hyperrectangles are disjoint by construction and their respective Volume can be summed up to the total Volume of $\Lambda^{\{1\dots N\}}(W,U)$

Each of this steps will be described in detail.

<u>Step 1:</u> The maximal coordinates along axes i in $\Lambda^N(W,U)$ is given by $\sum_{j=1}^{N} w_{ij}$ (and assumed in $\Gamma^N(W,U,N)$.)
Splitting each axis at these points leads to the decomposition

$$[0,U_i]_{i \in N} = \biguplus_{I \subseteq N} \underbrace{[0, \sum_{j \in N} w_{ij}]_{i \in I} \times [\sum_{k \in N} w_{kl}, U_k]_{k \in N \setminus I}}_{R^N(W,U,I)}$$

Visualization for $N=2$

1: $[0, w_{11}+w_{12}] \times [0, w_{21}+w_{22}]$
2: $[w_{11}+w_{12}, U] \times [w_{21}+w_{22}, U]$
3: $[0, w_{11}+w_{12}] \times [w_{21}+w_{22}, U]$
4: $[w_{11}+w_{12}, U] \times [0, w_{11}+w_{12}]$

This decomposition corresponds to the following expansion of $V([0,U]_{\{1\dots N\}})$

$$V([0,U]_N) = U^{|N|} = \prod_{i \in N} \left(\sum_{j \in N} w_{ij} + (U_i - \sum_{j \in N} w_{ij}) \right)$$

<u>Step 2:</u> The overlap between $R^N(W,U,I)$ and $\Lambda^N(W,U)$ is given by the overlap between $R^N(W,U,I)$ and the noninh. Regions generated by spiking configurations contained in I:

<u>Lemma 1:</u> $R^N(W,U,I) \cap \Lambda^N(W,U) = R^N(W,U,I) \cap \bigcup_{\emptyset \subset J \subseteq I} \Gamma^N(W,U,J)$

<u>Proof:</u> See next side

The union of n-inh. Regions generated by spiking patterns $\emptyset \subset J \subseteq I$ contains the lower dimensional $\Lambda^I(W,U)$ along the axes I.

<u>Lemma 2:</u> $\bigcup_{\emptyset \subset J \subseteq I} \Gamma^N(W,U,J) = \Lambda^I(W,U)_I \times [0,U_j]_{j \in N \setminus I}$

<u>Proof:</u> (See next side)

Finally, the intersection of the noninhabited Region with a hyperrectangle of smaller side lengths leads to a rescaled Λ

<u>Lemma 3:</u> For $\sum_{j \in N} w_{ij} \le z_i \le U_i$

$$\Lambda^N(W,U) \cap [0,z_i]_{i \in N} = \Lambda^N(W,z)$$

Proof: by definition

<u>Step 3:</u> The $|N|$-dimensional volume generated by spiking configurations of units N is the sum of the volumes of the regions intersecting each $R^N(W,U,I)$.

$$\Lambda^N(W,U) = \biguplus_{I \subseteq N} R^N(W,U,I) \cap \Lambda^N(W,U)$$

$\longrightarrow$ $= \dots =$ 3 Lemmata einsetzen und Umformungen analog zu Eurich et. al 2002

Regions leading to spiking patterns:

Proofs of the Lemmata.

<u>Lemma 1:</u> $R^N(w,u,I) \cap \Lambda^N(w,u) = R^N(w,u,I) \cap \bigcup_{\emptyset \subset J \subseteq I} \Gamma^N(w,u,J)$ (1)

<u>Proof:</u> $\Lambda^N(w,u) = \bigcup_{\emptyset \subset I \subseteq N} \Gamma^N(w,u,I)$. (1) follows, if the intersection

$R^N(w,u,I) \cap \Gamma^N(w,u,J) = \emptyset \quad \forall\, \emptyset \subset J \subseteq N \setminus I$

$$R^N(w,u,I) \cap \Gamma^N(w,u,J) = \left([0, \textstyle\sum_{j \in I} w_{ij})_{i \in I} \times [\sum_{k=1}^{N} w_{kl}, u_k)_{k \in N \setminus I}\right) \cap \left([0, \textstyle\sum_{j \in J} w_{ij})_{i \in J} \times [0, u_j)_{j \in N \setminus J}\right) = \emptyset$$

because for $j \in J$, $R^N(w,u,I)|_{l_j} = [\sum_{k=1}^{N} w_{jl}, u_j)$ while $\Gamma^N(w,u,J)|_{l_j} = [0, \sum_{i \in J} w_{ji})$ which are non intersecting. $\square$

<u>Lemma 2:</u> $\bigcup_{\emptyset \subset J \subseteq I} \Gamma^N(w,u,J) = \Lambda^I(w,u)_I \times [0, u_j]_{j \in N \setminus I}$

<u>Proof:</u>

$$\bigcup_{\emptyset \subset J \subseteq I} \Gamma^N(w,u,J) = \bigcup_{\emptyset \subset J \subseteq I} \left([0, \textstyle\sum_{j \in J} w_{ij}]_{i \in J} \times [0, u_i]_{i \in N \setminus J}\right)$$

$$= \bigcup_{\emptyset \subset J \subseteq I} \left([0, \textstyle\sum_{j \in J} w_{ij}]_{i \in J} \times [0, u_i]_{i \in I \setminus J}\right) \times [0, u_j]_{j \in N \setminus I}$$

$$= \Lambda^I(w,u)_I \times [0, u_j]_{j \in N \setminus I}$$

Recursive formula for nonunbalanced volume:

$$\mathrm{Vol}(\Lambda^N(w,u)) = \biguplus_{\emptyset \subset I \subseteq N} R^N(w,u,I) \cap \Lambda^N(w,u)$$

Lemma 1 $\rightarrow$ $= \biguplus_{\emptyset \subset I \subseteq N} R^N(w,u,I) \cap \left(\bigcup_{\emptyset \subset J \subseteq I} \Gamma^N(w,u,J)\right)$

Lemma 2 $\rightarrow$ $= \biguplus_{\emptyset \subset I \subseteq N} R^N(w,u,I) \cap \left(\Lambda^I(w,u_I)_I \times [0, u_j]_{j \in N \setminus I}\right)$

Def. $R^N(w,u)$ $\rightarrow$ $= \biguplus_{\emptyset \subset I \subseteq N} \left([0, \sum_{j \in N} w_{ij}]_{i \in I} \times [\sum_{k \in N} w_{kl}, u_k]_{k \in N \setminus I}\right) \cap \left(\Lambda^I(w,u_I)_I \times [0, u_j]_{j \in N \setminus I}\right)$

$$= \biguplus_{\emptyset \subset I \subseteq N} \left([0, \textstyle\sum_{j \in N} w_{ij}]_{i \in I} \cap \Lambda^I(w,u)_I\right) \times \left([\sum_{k \in N} w_{kl}, u_k]_{k \in N \setminus I} \cap [0, u_k]_{k \in N \setminus I}\right)$$

Lemma 3 $\rightarrow$ $= \biguplus_{\emptyset \subset I \subseteq N} \Lambda^I(w, (\sum_{j \in N} w_{ij})_{i \in I})_I \times [\sum_{l=N} w_{kl}, u_k]_{k \in N \setminus I}$

Closed form for the volume of nonunbalanced region

<u>Theorem:</u>

$$\mathrm{Vol}(\Lambda^N(w, 1_{|N|})) = \sum_{\emptyset \subset I \subseteq N} (-1)^{|I|+1} |W_{II}|$$

<u>Corollary:</u> For the original EtE Model, with $w^0_{ij} = \frac{\alpha}{N}$ $\forall\, i,j$

$$\mathrm{Vol}(\Lambda^N(w^0, 1_{|N|})) = \alpha$$

<u>Proof:</u> Every W_{II} has rank 1, so only the 1-dim determinants are nonzero $\square$

Derivation of Avalanche statistics

<u>Goal:</u> Construct probability space $(\Omega, \mathcal{F}, \mathbb{P})$ for avalanches generated by the EtE model

$$\Omega_N = \{\text{spiking pattern}\} = \left\{ p \mid p = \overbrace{i_{1_1}}^{g_1 = i} \overbrace{i_{2_1} \cdots i_{2_{g_2}}}^{g_2} ; \cdots \overbrace{i_{D_1} \cdots i_{D_{g_D}}}^{g_D} ,\ i_{jk} \neq i_{lm}\ \forall\, j,k,l,m,\ i_{jk} \in \{1 \dots N\} \right\}$$

$p \in \Omega$, $\mathrm{size}(p) = \sum_{j=1}^{D} g_j$, $\mathrm{duration}(p) = D$

$\mathcal{F}_N = 2^{\Omega_N}$, $\mathbb{P}_N(p) = \dfrac{\mathrm{Vol}(L_{p,N})}{\sum_{p' \in \Omega_N} \mathrm{Vol}(L_{p',N})}$, where $L_{p,N} := \{$Region of phase space leading upon external input to i_{1_1} to avalanche pattern $p\}$

<u>Calculation of $L_{p,N}$</u>

Intuition: For $\{i_{j_1} \dots i_{j_{g_j}}\}$ to spike during step j of the avalanche, the total input received due to steps $0 \dots j-1$ is not enough to make any of these units spike, but the additional internal input from the previous step makes all units spike!
Units not occuring in p have to be in the inhibited region, but the total input from the avalanche didn't make them spike
Unit i_{1_1} has to be in $[1-\Delta u, 1]$.

$$\tilde{L}_{p,N} = [1-\Delta u, 1]_{i_{1_1}} \times [1 - w_{2_1 i_{1_1}}, 1]_{j=1 \dots g_1} \times [1 - w_{2_j i_{1_1}} - \sum_{k=1}^{g_1} w_{2_j 2_k}, 1 - w_{2_j i_{1_1}}]_{j=1 \dots g_2}$$
$$\times \dots \times [1 - w_{D_j i} - \sum_{k=1}^{D-1} \sum_{l=1}^{g_k} w_{D_j k_l}, 1 - w_{D_j i} - \sum_{k=1}^{D-1} \sum_{l=1}^{g_k} w_{D_j k_l}]_{j=1 \dots g_D}$$

$$L_{p,N} = \tilde{L}_{p,N} \times \left([0, 1 - \sum_{k=1}^{D-1} \sum_{l=1}^{g_k} w_{jk_l}]_{j \in p^c} \setminus \Lambda^{p^c}(w, (1 - \sum_{k=1}^{D-1} \sum_{l=1}^{g_k} w_{jk_l})_{j \in p^c})\right)$$

$$\mathrm{Vol}(\tilde{L}_p^N) = \Delta u \cdot \prod_{j=1}^{g_1} w_{2_j i} \cdot \prod_{d=3}^{D} \prod_{j=1}^{g_d} \sum_{k=1}^{g_{d-1}} w_{d_j\, d-1_k}$$

$\mathcal{N}$

$(u, \dots, u)$

CASA MODA

$$\Lambda^{\mathcal{N}}(w, \underline{u}) = \biguplus_{\emptyset \neq I \subseteq \mathcal{N}} R^{\mathcal{N}}(w, u, I) \cap \Lambda^{\mathcal{N}}(w, u) \overset{\text{Lemma 1}}{=}$$

$$= \bigcup_{\emptyset \neq I \subseteq \mathcal{N}} \left(R^{\mathcal{N}}(w, u, I) \cap \bigcup_{\emptyset \neq J \subseteq I} \Gamma^{\mathcal{N}}(w, u, J) \right) \overset{\text{Lemma 2}}{=}$$

$$= \bigcup_{I} \left(R^{\mathcal{N}}(w, u, I) \cap \left(\Lambda^{I}(w, u)_I \times [0, u_j]_{j \in \mathcal{N} \setminus I} \right) \right)$$

$$\bigcup_{I} \left(\left[0, \sum_{j \in \mathcal{N}} w_{ij}\right]_{i \in I} \times \left[\sum_{l \in \mathcal{N}} w_{kl}, u_k\right]_{k \in \mathcal{N} \setminus I} \right) \cap$$

$$\cap \left(\Lambda^{I}(w, u)_I \times [0, u_j]_{j \in \mathcal{N} \setminus I} \right) =$$

$$\bigcup_{I} \left(\left[0, \overbrace{\sum_{j \in \mathcal{N}} w_{ij}}^{z_i}\right]_{i \in I} \cap \Lambda^{I}(w, u)_I \right) \times$$

$$\times \left(\left[\sum_{l \in \mathcal{N}} w_{kl}, u_k\right]_{k \in \mathcal{N} \setminus I} \cap [0, u_j]_{j \in \mathcal{N} \setminus I} \right)$$

$$\overset{3}{=} \biguplus_{I} \Lambda^{I}\left(w, \left(\sum_{j \in \mathcal{N}} w_{ij}\right)_{i \in I}\right) \times \left[\sum_{l \in \mathcal{N}} w_{kl}, u_k\right]_{k \in \mathcal{N} \setminus I}$$

Remaining:

- Proof that Λ^N is the noninhabited region ← analogous to Anna Lemma thesis
- Proof that uniform density on $[0,1]^N \setminus \Lambda^N$ is equilibrium.
- Proof that L^p is the region leading to spiking configuration p

$L^{N,p} := \{ x \in [0,1]_N \mid \text{spikingpattern}(x,i) = p \}$

Define operator spiking-pattern(x, i)

Prove set equality between them

→ Then, we are done!

↳ Marbel Table ...

Induktionshypothese $n-1 \to n$

1d: klar

$$V(\Lambda^N(w,1)) = \prod_{i \in N} \Big(\sum_{j \in N} w_{ij} \Big) + \sum_{\emptyset \subset I \subseteq N} \mathrm{Vol}(\Lambda^I(w, \leq \dots)) \cdot \prod_{i \in N \setminus I} \Big(1 - \sum_{j \in N} w_{ij} \Big)$$

alle Kard. N Kubboxen mit je einer mit w_i im i-ten Kubbox

2d:

$(w_{11}+w_{12})(w_{21}+w_{22})$

$+ (1-(w_{11}+w_{12}))\, w_{22}$

$+ (1-(w_{21}+w_{22}))\, w_{11}$

1er cancels ✓

$= w_{22} + w_{12}$

$+ \cancel{w_{11}w_{21}} + \cancel{w_{22}w_{21}} + w_{12}w_{21} + \cancel{w_{11}w_{22}}$

$- \cancel{w_{11}w_{21}} - \cancel{w_{12}w_{21}}$

$- \cancel{w_{21}w_{22}} - w_{22}w_{11}$

Nehme hier alle I mit $I = N \setminus \{j\}$ hieraus für $j \in N$

$$\Big(\sum_{\emptyset \subset K \subseteq I} (-1)^{|K+1|} \operatorname{Det} W_{KK} \Big) \Big(1 - \sum_{l=1} w_{jl} \Big)$$

$$= \sum_{\emptyset \subset K \subseteq I} (-1)^{|K+1|} \operatorname{Det} W_{KK} - \sum_{l} (-1)^{|K|} w_{jl} \operatorname{Det} W_{KK}$$

↳ Nehme j-j Eintrag

3d: Uff...

$w_{33} + w_{11} + w_{22}$ ist klar

- können jeweils aus den anderen Kubboxen wieder alle $N-1$ 1'en getroffen werden

↳ Von unten anfangen:

Warum gilt der Entwicklungssatz nochmal ...✓

$$\det A = \sum_{\sigma \in S_n} \Big(\operatorname{sgn}(\sigma) \prod_{i=1}^{n} a_{i\sigma(i)} \Big)$$

Rekursive Aufbau von S_n: $S_n = n_1 \cdot S_{n-1,1} + n_2 S_{n-1,2} \dots$

$= n \cdot S_{n-1}$ ✓

Wie mündet sich das signum beim Kombinieren:

$$\begin{matrix} 1 & 2 & 3 \\ 3 & 1 & 2 \end{matrix} \quad + \quad 2$$

$$\begin{matrix} 1 & 2 & 3 \\ 3 & 2 & 1 \end{matrix} \quad + \quad 2$$

$a_{13}\, a_{21}\, a_{32}$

$a_{13} - a_{22}\, a_{31}$

$$\det A = \sum_{i=1}^{n} (-1)^{i+j} \cdot a_{ij} \cdot \sum_{\sigma} \operatorname{sgn}(\sigma) \prod a_{i\sigma(i)})$$

$$\begin{matrix} x & - & + \\ - & + & - \\ + & - & + \end{matrix}$$

a_{11}

$\begin{matrix} 0 \\ 1 \\ 3 \\ 3 \end{matrix}$ $\quad \cancel{1\,2\,3}\ 0$ ✓

$\begin{matrix} 1 & 2 \\ 2 & 1 \end{matrix}$

$\begin{matrix} 1 & 2 \\ 2 & 1 \end{matrix}$

a_{12} $\quad \begin{matrix} 1 & 2 & 3 \\ 2 & 1 & 3 \end{matrix} \quad + \quad 2 \quad - \quad$ 1 klein schon da

$\begin{matrix} 1 & 2 & 3 \\ 2 & 3 & 1 \end{matrix} \quad - \quad + \quad$ 1 klein schon drin

$\begin{matrix} 1 & 2 & 3 \\ 2 & 1 & 3 \end{matrix} \quad 1$

$\begin{matrix} 1 & 2 & 3 \\ 1 & 3 & 2 \end{matrix}$ $\qquad \begin{matrix} 1 & 2 & 3 \\ 3 & 2 & 3 \end{matrix}$

TODO Permutationen anlesen .... schon wieder alles aus Lina 1 vergessen ...

$(w_{11}+w_{12})(w_{21}+w_{22})$ ← Jeder mit jedem:

$+ (1-(w_{11}+w_{12}))\,w_{22}$ $\quad w_{ik} \cdot w_{lm}$ wenn $i,k,l,m \in \{0,1\}$

$+ (1-(w_{21}+w_{22}))\,w_{11}$ $\quad w_{ii} \cdot (w_{j1}+w_{j2}+\dots)$ $\quad i \neq j$

Was davon sind permutationsinvariant

1. $w_{ij} \cdot w_{kl}$ $\quad i \neq j \quad k \neq l$
2. $w_{ii} \cdot w_{jj}$ $\quad i \neq j$ $\quad$ halber Vorzeichen
   → werden 2-mal getroffen
   alle nicht-perm. kürzen sich weg
- Dab 2x2

```
2D nicht vereinfacht

w00*(-w10 - w11 + 1.0) +
w11*(-w00 - w01 + 1.0)

+ (w00 + w01)*(w10 + w11)

2D vereinfacht
+ w00 + w11

+ w01*w10 -w00*w11

3D nicht vereinfacht
+ w00*(-w10 - w11 - w12 + 1.0)*(-w20 - w21 - w22 + 1.0)
+ w11*(-w00 - w01 - w02 + 1.0)*(-w20 - w21 - w22 + 1.0)
+ w22*(-w00 - w01 - w02 + 1.0)*(-w10 - w11 - w12 + 1.0)

+ (w00 + w01 + w02)*(w10 + w11 + w12)*(w20 + w21 + w22)

+ (w00*w12 + w02*w11 + (w00 + w01)*(w10 + w11))*(-w20 - w21 - w22 + 1.0)
+ (w00*w21 + w01*w22 + (w00 + w02)*(w20 + w22))*(-w10 - w11 - w12 + 1.0)
+ (w10*w22 + w11*w20 + (w11 + w12)*(w21 + w22))*(-w00 - w01 - w02 + 1.0)

TODO Zunahme und Abnahme von 2-Elementigen Produkten mit Zu- und Abnahme im 2d Fall ve

Vereinfacht:
```

2-er Produkte bei 3d die nicht bei 2d sind

links: Es kommt hinzu

$w_{00}(-w_{10}-w_{11}-w_{12})$ $\quad = -2\times 2$ Dabs

$w_{11}(-w_{00}-w_{01}-w_{02})$ $\quad - w_{ii} \cdot w_{jk}$ $\quad i \in 0,1$ $\quad k \in 012 \setminus 01$

$\quad + w_{ii} \cdot w_{jk}$ $\quad$ kürzt sich weg!

kürzt sich mit der gleichen Begründung auch bei 4x4 weg!

Jetzt: Welche übrig 3D Terme:

+ alle Kombinationen $w_{0i}\, w_{1j}\, w_{2k}$ $\quad$ 27 Terme 3^3

(+ $w_{00}\, w_{1i}\, w_{2j}$ 9
$w_{11}\, w_{0i}\, w_{2j}$ 9 — leben ab overlap
$w_{22}\, w_{0i}\, w_{1j}$ 9)

→ sind doch schon ~~$w_{00}\, w_{01}\, w_{02}$~~ $w_{10}\, w_{11}\, w_{12}$
um Dab kürzen $w_{20}\, w_{21}\, w_{22}$
mit drin
$- w_{00} \cdot$ Dab $02 + w_{01}$ Dab

$-(-\text{Dab } 01) \cdot w_{2i}$
$-(-\text{Dab } 02) \cdot w_{1i}$
$-(-\text{Dab } 12) \cdot w_{0i}$

Was davon sind Permutationsinvariant?

$w_{00}\, w_{11} \quad w_{01}\, w_{10}$

$-(-w_{00}\, w_{11} + w_{10}\, w_{01})\, w_{2i}$

Nur $(-\text{Dab } ij)$ Werte sind valide Permutationen

1-er combos rekursiv passt

2-er combos (oder alle niedrig denn) passen auch (π-Dreamer)

Erhalt:

$w_{00} + w_{11} + w_{22}$

$$
\begin{aligned}
&- \cancel{w_{00}w_{10}} - \cancel{w_{00}w_{11}} - \cancel{w_{00}w_{12}} - \cancel{w_{00}w_{20}} - \cancel{w_{00}w_{21}} - \cancel{w_{00}w_{22}} \\
&- w_{11}w_{00} - w_{11}w_{01} - \cancel{w_{11}w_{02}} - \cancel{w_{11}w_{20}} - w_{11}w_{21} - \cancel{w_{11}w_{22}} \\
&- w_{22}w_{00} - \cancel{w_{22}w_{01}} - w_{22}w_{02} - \cancel{w_{22}w_{10}} - w_{22}w_{11} - \cancel{w_{22}w_{12}} \\
&+ \cancel{w_{00}w_{12}} + \cancel{w_{00}w_{21}} + w_{00}\cancel{w_{10}} + \cancel{w_{00}w_{11}} + w_{01}w_{10} + \cancel{w_{01}w_{11}} \\
&+ \cancel{w_{00}w_{21}} + \cancel{w_{01}w_{22}} + \cancel{w_{01}w_{20}} + \cancel{w_{02}w_{21}} + w_{02}w_{20} + \cancel{w_{02}w_{22}} \\
&+ \cancel{w_{10}w_{22}} + \cancel{w_{12}w_{20}} + \cancel{w_{12}w_{21}} + \cancel{w_{12}w_{22}} + w_{12}w_{21} + \cancel{w_{12}w_{22}}
\end{aligned}
$$

Es bleibt übrig

$$
\boxed{\begin{aligned}
&w_{01}w_{10} - w_{00}w_{11} \\
&w_{22}w_{20} - w_{20}w_{22} \\
&w_{12}w_{21} - w_{11}w_{22}
\end{aligned}}
$$

$$
\begin{aligned}
&w_{00}w_{10}w_{20} + w_{00}w_{10}w_{21} + w_{00}w_{10}w_{22} + w_{00}w_{11}w_{20} + w_{00}w_{11}w_{21} + w_{00}w_{11}w_{22} + w_{00}w_{12}w_{20} + w_{00}w_{12}w_{21} + w_{00}w_{12}w_{22} \\
&w_{11}w_{00}w_{20} + w_{11}w_{00}w_{21} + w_{11}w_{00}w_{22} + w_{11}w_{01}w_{20} + w_{11}w_{01}w_{21} + w_{11}w_{01}w_{22} + w_{11}w_{02}w_{20} + w_{11}w_{02}w_{21} + w_{11}w_{02}w_{22} \\
&w_{22}w_{00}w_{10} + w_{22}w_{00}w_{11} + w_{22}w_{00}w_{12} + w_{22}w_{01}w_{10} + w_{22}w_{01}w_{11} + w_{22}w_{01}w_{12} + w_{22}w_{02}w_{10} + w_{22}w_{02}w_{11} + w_{22}w_{02}w_{12}
\end{aligned}
$$

$$
\begin{aligned}
&- w_{00}w_{12}w_{20} - w_{02}w_{11}w_{20} - w_{00}w_{10}w_{20} - w_{00}w_{11}w_{20} - w_{01}w_{10}w_{20} - w_{01}w_{11}w_{20} \\
&- w_{00}w_{12}w_{21} - w_{02}w_{11}w_{21} - w_{00}w_{10}w_{21} - w_{00}w_{11}w_{21} - w_{01}w_{10}w_{21} - w_{01}w_{11}w_{21} \\
&- w_{00}w_{12}w_{22} - w_{02}w_{11}w_{22} - w_{00}w_{10}w_{22} - w_{00}w_{11}w_{22} - w_{01}w_{10}w_{22} - w_{01}w_{11}w_{22}
\end{aligned}
$$

$$
\begin{aligned}
&- w_{00}w_{21}w_{10} - w_{01}w_{22}w_{10} - \cancel{w_{00}w_{20}w_{10}} - w_{00}w_{22}w_{10} - \cancel{w_{02}w_{20}w_{10}} - w_{02}w_{22}w_{10} \\
&- w_{00}w_{21}w_{11} - w_{01}w_{22}w_{11} - \cancel{w_{00}w_{20}w_{11}} - w_{00}w_{22}w_{11} - \cancel{w_{02}w_{20}w_{11}} - w_{02}w_{22}w_{11} \\
&- w_{00}w_{21}w_{12} - w_{01}w_{22}w_{12} - \cancel{w_{00}w_{20}w_{12}} - w_{00}w_{22}w_{12} - \cancel{w_{02}w_{20}w_{12}} - w_{02}w_{22}w_{12}
\end{aligned}
$$

$$
\begin{aligned}
&- w_{10}w_{22}w_{00} - w_{11}w_{20}w_{00} - w_{11}w_{21}w_{00} - w_{11}w_{22}w_{00} - w_{12}w_{21}w_{00} - w_{12}w_{22}w_{00} \\
&- w_{10}w_{22}w_{01} - w_{11}w_{20}w_{01} - w_{11}w_{21}w_{01} - w_{11}w_{22}w_{01} - w_{12}w_{21}w_{01} - w_{12}w_{22}w_{01} \\
&- w_{10}w_{22}w_{02} - w_{11}w_{20}w_{02} - w_{11}w_{21}w_{02} - w_{11}w_{22}w_{02} - w_{12}w_{21}w_{02} - w_{12}w_{22}w_{02}
\end{aligned}
$$

22 Kombinationen

Was machen die Permutationsbeine

$w_{00}w_{11}w_{22}$: $+4-3=1$ ✓

$w_{00}w_{12}w_{21}$: $+2-2=-1$ ✓

$w_{01}w_{10}w_{22}$:

Warum kürzen sich alle 3er-combos weg die keine permutation sind?

Zahle Vorkommen von

$$w_{1\sigma(1)}w_{2\sigma(2)}w_{3\sigma(3)} = 1+\#\sigma(i)=i$$

2-dring $\quad \sigma(0)=0,1$!

$+1$-cycle 2 $\quad \sigma(1)=0,1$!

$\sigma(2) =$ bel.

Bedingung dass es nicht wegfällt:

σ muss bijektiv sein $\Rightarrow$ Permutation

d.h. $\sigma(1) \neq \sigma(2) \neq \sigma(3)$

~~Fallunt~~: tzyall dig: 3: $1+3-3=1$

tzyall dig 2: $\Rightarrow$ tzyall dig = 3

tzyall dig = 2

$w_{00}w_{10}w_{21}$

Unterscheidung anhand der Zyklentypes

$1^3 \Rightarrow 1+3-3$

$1^1 2^1 = (12)(1), (01)(2), (02)(1) = 1+1-3 = -1$

$3^1 = (123)$

$w_{01}w_{12}w_{20}$

$w_{00}w_{10}w_{20} = 1+1-2$

$(0)($

Sieht man die Determinante geometrisch? $N=3$

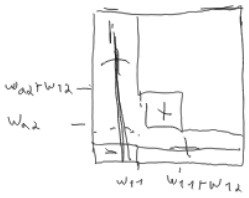

$-w_{11}w_{22}+w_{12}w_{21}$

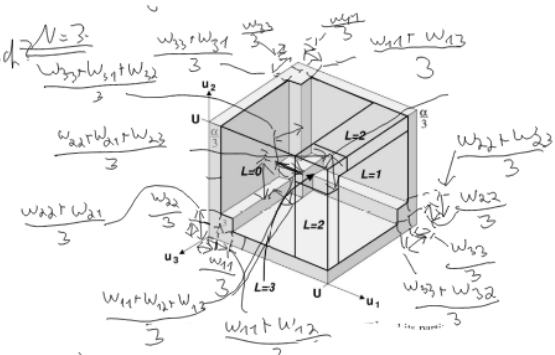

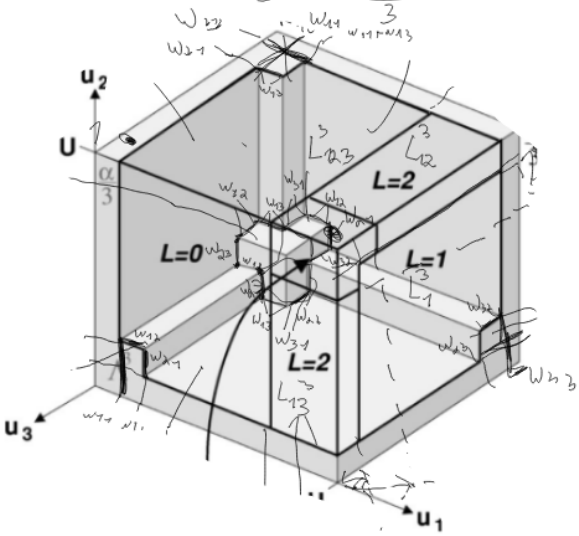

Was gilt bei (0,0,0) ab

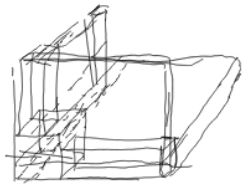

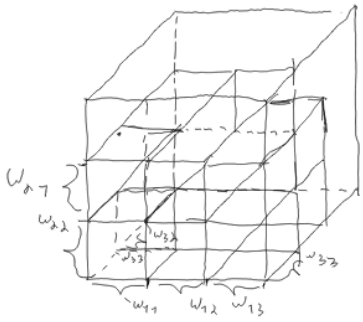

3 beim permutation

$w_{00}w_{10}w_{01}$

```
2D nicht vereinfacht

w00*(-w10 - w11 + 1.0) +
w11*(-w00 - w01 + 1.0)

+ (w00 + w01)*(w10 + w11)

2D vereinfacht
+ w00 + w11

+ w01*w10 -w00*w11

3D nicht vereinfacht
+ w00*(-w10 - w11 - w12 + 1.0)*(-w20 - w21 - w22 + 1.0)
+ w11*(-w00 - w01 - w02 + 1.0)*(-w20 - w21 - w22 + 1.0)
+ w22*(-w00 - w01 - w02 + 1.0)*(-w10 - w11 - w12 + 1.0)

+ (w00 + w01 + w02)*(w10 + w11 + w12)*(w20 + w21 + w22)

+ (w00*w12 + w02*w11 + (w00 + w01)*(w10 + w11))*(-w20 - w21 - w22 + 1.0)
+ (w00*w21 + w01*w22 + (w00 + w02)*(w20 + w22))*(-w10 - w11 - w12 + 1.0)
+ (w10*w22 + w11*w20 + (w11 + w12)*(w21 + w22))*(-w00 - w01 - w02 + 1.0)

TODO Zunahme und Abnahme von 2-Elementigen Produkten mit Zu- und Abnahme im 2d Fall ve

Vereinfacht:
```

$w_{00} w_{11} w_{22}$

Vorkommen von 3x3 Perm. (in Cyclenform)

Form: 1^3 : $w_{00} w_{11} w_{22}$: $1 + 3 - 3$

$1 + 1$ cycles $\quad 1 + 2$ or 3 cycles

$1^1 2^1$: $w_{00} w_{22} w_{11}$: $1 + 1 - (1 - 2) = -1$

$w_{02} w_{11} w_{20}$ $\quad H(i)$ $\quad$ 1 2er cycle

$w_{01} w_{10} w_{22}$ $\quad$ 1-er cycle wird hier allen anderen

3^1 $w_{01} w_{12} w_{20}$

$w_{02} w_{10} w_{21}$: $1 + 0 + 0 = 1$

Permutationen klappen. Wann kürzen sich nichtperms weg?

Bsp $w_{00} w_{11} w_{20}$: NR-Sys: $(0)(1)(02)$ Kzyklen: $1 + 2 - 3$

1-er wird

Eindeutigkeit NR-Sys Form:

$(iI)(jJ)(kK)$

(012)

0	1	2	NR-Sys	andere Schreibweise	
0	0	0	(0)(01)(02)(012)	(012)	1+1-2
0	0	1	(0)(01)(02)(12)	(012)	1+1-2
0	0	2	(0)(01)(12)	(01)(12)	1+2-3
0	1	0	(0)(02)(1)	(012)(1)	
0	1	1	(0)(1)(12)	(0)(112)	
0	1	2	(0)(1)(2)	(0)(1)(2)	1+3-3=1
0	2	0	(0)(02)(012)	(012)	1+1-3
0	2	1	(0)(12)	(0)(12)	
0	2	2	(0)(12)(2)	(0)(21)	
1	0	0	(01)(012)	(011)(2)	
1	0	1	(01)(012)	(011)(2)	
1	0	2	(02)(1)	(01)(02)	
1	1	0	(1)(01)(012)	(1)(02)	
1	1	1	(1)(01)(2)(012)	(1)(012)	
1	1	2	(2)(1)(01)	(2)(1)(0)	
1	2	0	(12)(3)	(123)	
1	2	1	(12)(012)	(12)(0)	
1	2	2	(2)(12)(012)	(21)(0)	
2	0	0	(02)(012)	(021)(1)	
2	0	1	(012)	(012)	
2	0	2	(2)(02)(012)	(2)(01)	
2	1	0	(02)(1)	(02)(1)	
2	1	1	(1)(2)(012)	(1)(02)	
2	1	2	(1)(2)(02)	(1)(2)(0)	
2	2	0	(02)(012)	(021)(1)	
2	2	1	(12)(012)	(12)(0)	
2	2	2	(2)(12)(02)(012)	(2)(01)	

$(:) \to +1 - 2$

$(ij) \to -1$

↳ Pal together + and minus

$+ \#(i) - \#$

C_0

$+$: $(0), (01), (012), (01|2)$ $\quad$ $C_{01} = C_0, C_1, (01), (01|2)$

C_1 — $(1), (10), (12), (1|12)$ $\quad$ $C_{02} = C_0, C_2, (02), (02|1)$

C_2 — $(2), (20), (21), (2|01)$ $\quad$ $C_{12} = C_1, C_2, (12), (12|0)$

$(0|12)$ $\quad = 1 + C_0 - C_{01} - C_{02} = 0$

$(0|12)$ $\quad = 1 + C_0 - C_{01} - C_{02} = 0$

$(0|1)(2)$ $\quad = 1 + C_0 + C_2 - C_{01} - C_{02} - C_{12} = 0$

$(0|2)(1)$ $\quad = 1 + C_1 + C_0 - C_{01} - C_{12} - C_{02} = 0$

$(0)(1|2)$ $\quad = 1 + C_0 + C_1 - C_{02} - C_{01} - C_{12} = 0$

$(0)(1)(2)$ $\quad = 1 + C_0 + C_1 + C_2 - C_{02} - C_{01} - C_{12} = 1$

$(0|12)$ $\quad = 1 + C_0 - C_{01} - C_{02} = 0$

$(0)(12)$ $\quad = 1 + C_0 - C_{01} - C_{02} - C_{12} = -1$

$(0)(12|1)$

$(0|12)$

$(01)(2)$

$(1|02)$

$(1|02)$

$(2)(1|0)$

(12)

$(12|0)$

$(2|01)$

$(02|1)$

(012)

$(2|01)$

$(02)(1)$

$(1|02)$

$(1)(2|0)$

$(02|1)$

$(12|0)$

$(2|01)$

$= (1 + C_{01})$

↳ What change is induced by inserting a 1?

$(0), (12) \to (0), (112) \to$ change by additional $+1$

$(0), (1), (2), \to$ can't introduce loops :)

Aber:

$(012) \to (01|2) \to$ introduce additional -1

$(012) \to (01|2) \to \pm 0$

$1 - C_{01} \to 1 - C_{01} + C_0 - C_{02}$

Permutationen mit +

(012)
$(0)(11)(2)$ $\to -1$

passt genau

Permutationen mit −

$(0)(12)$
$(1)(20)$
$(2)(10)$ $\to +1$

⇒ Wie viele unterschiedliche Formen gibt es

- Einteilung 1, 2 oder 3 Gruppen

1: alle, oder je 2 und 1 nach 1 oder 1 und 2 nach 1

$1 + \binom{3}{2} + \binom{3}{1} = 7$

2: 1 Block Länge 1, 1 Block mit Länge $N-1$

$3 \cdot$ (jeweils $(jk)(j|k)(k|j)$)

3: (123) $(1|2,3)$ $(2|13)$ $(3|12)$ $\quad 2^N - 1$

$(01|2)(02|1)(12|3)$

$(i|jk) \hat{=} 2$

Vereinfacht:

patterns.txt 2/5 1,70 (Text +I Projectile[-] Undo-Tree Helm , Wrap Abbrev) Mi Jul 12 15:23 15.51

```
+ (w00*(w12 + w13) + w11*(w02 + w03) + (w00 + w01)*(w10 + w11))*(-w20 - w21 - w22 - w23 + 1.0)*(-w30 - w31 - w32 - w33 + 1.0)
+ (w00*(w21 + w23) + w22*(w01 + w03) + (w00 + w02)*(w20 + w22))*(-w10 - w11 - w12 - w13 + 1.0)*(-w30 - w31 - w32 - w33 + 1.0)
+ (w00*(w31 + w32) + w33*(w01 + w02) + (w00 + w03)*(w30 + w33))*(-w10 - w11 - w12 - w13 + 1.0)*(-w20 - w21 - w22 - w23 + 1.0)
+ (w11*(w20 + w23) + w22*(w10 + w13) + (w11 + w12)*(w21 + w22))*(-w00 - w01 - w02 - w03 + 1.0)*(-w30 - w31 - w32 - w33 + 1.0)
+ (w11*(w30 + w32) + w33*(w10 + w12) + (w11 + w13)*(w31 + w33))*(-w00 - w01 - w02 - w03 + 1.0)*(-w20 - w21 - w22 - w23 + 1.0)
+ (w22*(w30 + w31) + w33*(w20 + w21) + (w22 + w23)*(w32 + w33))*(-w00 - w01 - w02 - w03 + 1.0)*(-w10 - w11 - w12 - w13 + 1.0)

+ (w00 + w01 + w02 + w03)*(w10 + w11 + w12 + w13)*(w20 + w21 + w22 + w23)*(w30 + w31 + w32 + w33)

+ (-w00 - w01 - w02 - w03 + 1.0)*(w10*w20*w33 + w10*w22*w30 + w10*(w21*w33 + w22*w31 + (w22 + w23)*(w32 + w33)) + w11*w20*w30 + w20*(w11*w32 + w12*w33 + (w11 + w13)*(w31 + w33)) +
   w30*(w11*w23 + w13*w22 + (w11 + w12)*(w21 + w22)) + (w11 + w12 + w13)*(w21 + w22 + w23)*(w31 + w32 + w33))

+ (-w10 - w11 - w12 - w13 + 1.0)*(w00*w21*w31 + w01*w21*w33 + w01*w22*w31 + w01*(w20*w33 + w22*w30 + (w22 + w23)*(w32 + w33)) + w21*(w00*w32 + w02*w33 + (w00 + w03)*(w30 + w33)) +
   w31*(w00*w23 + w03*w22 + (w00 + w02)*(w20 + w22)) + (w00 + w02 + w03)*(w20 + w22 + w23)*(w30 + w32 + w33))

+ (-w20 - w21 - w22 - w23 + 1.0)*(w00*w12*w32 + w02*w11*w32 + w02*w12*w33 + w02*(w10*w33 + w11*w30 + (w11 + w13)*(w31 + w33)) + w12*(w00*w31 + w01*w33 + (w00 + w03)*(w30 + w33)) +
   w32*(w00*w13 + w03*w11 + (w00 + w01)*(w10 + w11)) + (w00 + w01 + w03)*(w10 + w11 + w13)*(w30 + w31 + w33))

+ (-w30 - w31 - w32 - w33 + 1.0)*(w00*w13*w23 + w03*w11*w23 + w03*w13*w22 + w03*(w10*w22 + w11*w20 + (w11 + w12)*(w21 + w22)) + w13*(w00*w21 + w01*w22 + (w00 + w02)*(w20 + w22)) +
   w23*(w00*w12 + w02*w11 + (w00 + w01)*(w10 + w11)) + (w00 + w01 + w02)*(w10 + w11 + w12)*(w20 + w21 + w22))
```

$(01)(23)$ $w_{01}w_{10}w_{23}w_{32}$ $\quad$ $\begin{matrix}0&1&2&3\\1&0&3&2\end{matrix}$

Vorzeichen für i-Zyklus $(-1)^{N-i}$

Matching für 1-Cycles

Sign: $(-1)^{4-1} = -1$

C_0: (0), (01), (012), (013), (0|12), (0|13), (0|23), (0|123)
C_1: (1), (10), (12), (13), (1|02), (1|03), (1|23), (1|023)
C_2: (2), (210), (21), (213), (2|01), (2|03), (2|13), (2|013)
C_3: (3), (310), (31), (312), (3|01), (3|02), (3|012)

Matchings für 2-Cycles

Sign: $(-1)^{4-2} = 1$

C_{01}: $C_0, C_1, (01), (01|2), (01|3), (01|23)$
C_{02}: $C_0, C_2, (02), (02|1), (02|3), (02|13)$
C_{03}: $C_0, C_3, (03), (03|1), (03|2), (03|12)$
C_{12}: $C_1, C_2, (12), (12|0), (12|3), (12|03)$
C_{13}: $C_1, C_3, (13), (13|0), (13|2), (13|02)$
C_{23}: $C_2, C_3, (23), (23|0), (23|1), (23|01)$

Matchings für 3-Cycles:

Sign $(-1)^{4-3} = -1$

C_{012}: $C_0, C_1, C_2, C_{01}, C_{02}, C_{12}, (012), (012|3)$
C_{013}: $C_0, C_1, C_3, C_{01}, C_{03}, C_{13}, (013), (013|2)$
C_{023}: $C_0, C_2, C_3, C_{02}, C_{03}, C_{23}, (023), (023|1)$
C_{123}: $C_1, C_2, C_3, C_{12}, C_{13}, C_{23}, (123), (123|0)$

Idee $\binom{4}{3} - \binom{3}{3}$

01 allein: $\binom{4}{1}$ -

$1 \to 3,\ 2 \to 3+2,\ 3 \to 3+2+1$ $\quad \binom{N}{2} - \binom{N-k}{2}$ $\quad 6-3$

Wikipedia

Allgemein: $1 + \sum_{i=1}^{N-1} \binom{N}{i} \cdot (-1)^{N-i} = \cancel{1} - \cancel{1} + (-1)^{N+1} =$

$\hookrightarrow -2 \cdot (-1)^{N-1} = (-1)^N$

Sg:	Sign:	Treffer:
1^4 (0)(1)(2)(3)	+1	$1 - (C_0 + C_1 + C_2 + C_3) + (C_{01}, C_{02}, C_3, C_{12}, C_{13}, C_{23}) - [C_{012} + C_{013} + C_{023} + C_{123}) = -1$
$1^2 2^1$ (01)(2)(3) (02)(1)(3) (03)(1)(2) (12)(0)(3) (13),(0),(2) (23),(0),(1)	-1	$1 - (C_2 + C_3) + (C_{01} + C_{02} + C_{03} + C_{12} + C_{13} + C_{23}) - [C_{012} + C_{013} + C_{023} + C_{123}) = 1$
2^2 (01),(23) (02),(13) (03),(12) (12),(03) (13),(02) (23),(01)	+1	$1 - ( ) + C_{01} + C_{23} - (C_{012} + C_{013} + C_{023} + C_{123}) = -1$ Allgemein: $\to +2 - 4 \Rightarrow (-1)^{N+1}$
$1^3 1^1$ (012)(3) (013)(2) (023)(1) (123)(0)	+1	$1 - C_3 + C_{03} + C_{13} + C_{23} - (C_{012} + C_{013} + C_{023} + C_{123}) = -1$ Allgemein: $\to -1 + 1 \Rightarrow (-1)^{N+1}$
4^1 (1234)	-1	1 Allgemein: Trivial $1 \cdot (-1)^{N+1}$

Berechnung direkt von Signaturen

$1^N \to (-1)^{N+1}$

$1 + \sum_{i=1}^{n-1} \binom{N}{i} \cdot (-1)^{N-i}$

$2^1 1^{N-2} \to (N-2) \cdot (-1)^{N-2} + \ldots$

$(\ldots)^k \to \binom{N}{2} C_1 +$

$1^k \to k \cdot C_1 + \left[\binom{m}{2} - \sum_{j=1}^{k} \binom{m-k}{2}\right] C_2 + \ldots$

$1^2 2^1 3^1$

0123, 01. Welche 3-er combos ohne 01 gibt es?
→ Mache 01 zum Extra Buchstaben und reduziere so das Problem auf numerische 1-en Teile gibt es von $N-1$ ....

Formalisierung

$M(m, i, k, j)$ Anzahl von i-Teilmengen von $1..m$ die j k-elementige Teilmengen enthalten

$M(m, i, k, j) = MC$

2-4 Kombos schon..

01234 56

Spezialfall

$M(m, i, k, 1) = \binom{m}{i} - \sum_{l=1}^{k} \binom{m-k}{i} \binom{m-1}{i} + \binom{m-2}{i}$

$m-1$ i Anordnungen ohne erstes Element

Anordnungen ohne erstes und zweites Element

$M(m, i, 1, j) = M(m-j, i-j, 1, 1)$

(01)(2,3)(4,5,6)
(23)(01)(...)

1 2 3 4 5 6 7 8

2er combos
1-der 7 mögl. Vorfallsbedingungen
2-2er ⇒ kann Overlap zu den 1-er

3er combos

1er ⇒ $\binom{7}{2}$ mögl. Vorfallsbedingungen
2er combos ⇒ Tjin kein gibt es overlap mit den 1-ern ⇒ müssen zusammen betrachtet werden!

Partitionen der 3
3-0 trivial
1-2, 2-1 } {1,2}
0-3

Vielleicht eher fragen:

Wie viele 3-er combos kann ich aus den selektierten 1-er und 2-er zusammenbauen (Allgemein typisch overlaps

(012) (023) (013) × 1.

Wähle 2 der restlich 5

23 01456
↳ wähle 2 der restl. 5 aus
↳ subtrahiere die doppelt gezählten

Jeder 1-er mit jeder 2-er

01 2 3 4 5 6

Das sind im allgemeinen Fall genau die, die man bei der gedachten Betrachtung abziehen muss

Overlap in diesem Fall

$\binom{N-2}{2} \cdot +1$

2 2 1 auch möglich

1 4
2 3 ⇒ die Klappt weil Partitionen dasselbe sind

Um Koeffizient C_3 auszurechnen alle Zyklen der Länge ≤ 3 angucken, dazugehörige Ergebnisse für jede Zyklenlänge zählen und den Overlap durch Partitionierung abziehen!

Situation:

Permutation gegeben durch Zykelform $p = 1^{n_1} 2^{n_2} \cdots N^{N_N}$ $\quad \sum_{i=1}^{N} i n_i = N$

Koeffizienten
C^i ← alle möglichen Teilzykel der Länge i
$C^i_{i_1 \cdots i_i}$ ← enthält Zykel $i_1 \cdots i_i$ und alle Teilzykel

Vorzeichen
$(-1)^{N-i}$

Koeffizient der Permutation berechnet sich aus

↖ Number of occurences of p in C^i

Problem: Berechne $\#C^{N_i}_p$

1. $\#C^{N_i}_p$ ist eine Funktion der Anzahl der Zykel mit Länge $\leq i$:
$\#C^{N_i}_p = \#C^i(n_1, \dots, n_i)$ for $p = 1^{n_1} \cdots N^{N_N}$
↳ Sie ist bestimmt durch die Anzahl von disjunkten Vereinigungen der Zykel mit Längen $1 \dots i$ zu einem Zykel der Länge i

$$\#C^i_p = \sum_{j=1}^{i} \sum_{k=1}^{n_j} \binom{N-(k-1)}{i-j} \quad \dots \text{ To be continued}$$

j ist die größte aktuell

always take into account all previously noted instances

$$\#C^i_p = \sum_{j=1}^{i} \sum_{k=1}^{n_j} \sum_{i=0}^{k-1} \binom{k}{i} \cdot \binom{N-i}{j-i}$$

$\text{Part}\, p^i := \{ (p^1, \dots, p^i) \mid p = (j^{n_j}), 0 \leq p^j \leq n_j \ \forall j \leq i, \sum_{j=1}^{i} p^j = i \}$

↖ Menge der Partitionen von p konsistent mit Zykelform von P

⇒ Ok, Allgemeines Vorgehen nochmal in Worten beschreiben

- Für alle Zykelgrößen j von 1 bis i
- Für jeden Zyklus k der Zykelangröße j
- Zähle die Anzahl der durch k neu gewonnenen Vereinigungen des Zyklus k zu einem der größe j
  ↳ dazu darf kein bisher betrachteter Zyklus k' von größen $j' \leq j$ in der Vereinigung mit vorkommen.
  ↳ Um einen Zyklus k' der Größe j' bei der Wahl möglicher Vereinigungen zu vermeiden muss mindestens ein Element von k' ausgelassen werden. Anders ausgedrückt: Man wählt entweder $l = 0, 1, \dots, j'-1$ Der j' Elemente von k' aus und die restlichen $j-l$ Elemente der Vereinigung aus den übrig gebliebenen Elementen.
  ↳ Um also alle bisher betrachteten Zykel k' auszuschließen wähle für jede Möglichkeit alle k' zu umgehen die übrig gebliebenen $j - \sum_{k'} l(k')$ aus den restlichen $i - \sum k'$ Elementen

↳ Das Verfahren funktioniert für beliebig große Partitionen
Morgen: Schreibe es als Formel und zeige mit Induktion über Länge und Zykeltyp der Permutation, dass $C_p = \text{sign}(p)$

Formel:

$$\#C^{N_i}_p = \sum_{j=1}^{i} \sum_{k=1}^{n_j} \sum_{j'=1}^{j-1} \left(\sum_{l_{k'}^{j'}} \binom{n_{j'}}{k'} \right) \cdot \binom{N - j - \sum j' \cdot k'}{i - j - \sum k'}$$

$0 \leq l^{j'}_{k'} \leq j'$
$1 \leq j' \leq j$
$1 \leq k' \leq n_{j'}$ $\quad j' < j$
$1 \leq k' \leq k$ obviuse

Lassen sich hier Sachen zu gemeinsamen Faktoren verwerfen?

↳ Kann das Problem mit Balls and Boxes formuliert werden

2 2 3
1 1 2 $\quad$ Rest
$N - \sum \text{boxes} - i$

kann man mehrere Boxen gleicher größe zu einer zusammenfassen?
Nicht unbedingt ...

0 1 2 3 4 5 6 7 8 9

C^5 für
Bsp.: 1 2 3 2 4 1 5 3

Mit nur 1: $\binom{9}{4} + \binom{8}{4}$

Vereinigungen von 2^7
1.-2: $\binom{8}{3}$ Möglichkeiten zur Vereinigung.

Frage gibt es overlap zu den 1-er Vereinigungen
Ja. Beispiel

$p = (0)(7)(23) \dots$

1-er Vereinigung: 0 2 3 4 5
2-er Vereinigung: 2 3 0 4 5

↳ Also: Es dürfen keine der 1-er ausgewählt werden für die Vereinigung!

↳ To continue für die Vereinigung des ersten 2-ers haben wir $\binom{6}{3} + \binom{4}{3}$ ← für den 2. Zykelen noch 4 nicht verwendete Knoten übrig

↳ Sowieso glaube ich nicht wirklich !!! ONein!

↳ Es ist nicht notwendig keins der Elemente in der ersten 2er Kombi zu treffen sondern dass nicht beide zusammen getroffen werden

(0 1) 2 3 4
wähle 3 aber nicht die Kombi 0 1
1. wähle keine der markierten $\binom{N-2}{3}$ Möglichkeiten
2. wähle eine der Möglichkeiten $\binom{2}{1} \cdot \binom{N-2}{2}$

Allgemein

k Zykel verwenden $\quad \sum_{i=0}^{k-1} \binom{k}{i} \cdot \binom{N-i}{j-i}$

↳ Reduziert zum 1d Fall!

4 2er

Gegen 1.er zu 3.er
Mögliche Wahlen für die 2er

1 2 3 4
(0 0 0 0) ← 1 Wahl für Summe gleich 0
(1 0 0 0)
(0 1 0 0)
(0 0 1 0)
(0 0 0 1) ← 4 Wahlen genau 1 ist 0
(1 1 0 0)
(1 0 1 0)
(1 0 0 1) ← $\binom{6}{2}$ Choices for 2 elements = 1

↳ Allgemein
4-Summanden bis höchstens 2
Wie viele Kombinationen damit die Summe $\leq j$ bleibt

$j = 1$: 4
$j = 2$: 6 + 4 ?

Bemerke: Partitionen nicht eingeschränkter Summandengröße

Inclusion Exclusion Principle sieht sehr nice aus!

$$|\bigcup| = \overset{w_{11}}{|1|} + \overset{w_{22}}{|2|} + \overset{(w_{12}+w_{12})}{|3|}$$
$$- \overset{w_{11}w_{22}}{|1 \cap 2|} - \overset{w_{22}(w_{11}+w_{12})}{|1 \cap 3|}$$
$$- \overset{w_{22}(w_{11}+w_{12})}{|2 \cap 3|}$$
$$+ \overset{w_{11}w_{22}w_{23}}{|1 \cap 2 \cap 3|}$$

$-w_{11}w_{22} + w_{12}w_{22}$

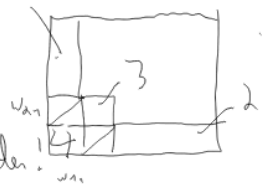

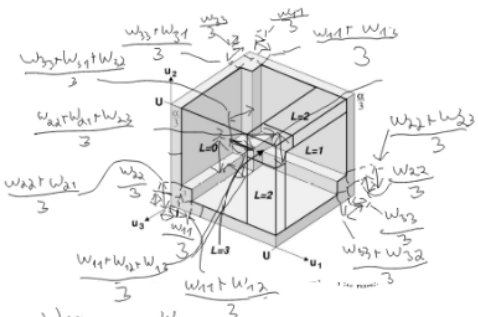

Hmm, sieht nicht so einfach aus, aber vielleicht hilft hier Induktion wieder!

Was ist der Überlapp von 3 rechtecken

2d:

$$[w_{11}, u_2] \cap [u_1, w_{22}] = [w_{11}, w_{22}]$$

2d:

$$[0, w_{11}] \times [0, u_2] \cap [0, u_1] \times [0, w_{22}] = [0, w_{11}] \times [0, w_{22}]$$

3d:

$$[0, w_{11}+w_{12}] \times [0, w_{21}+w_{22}] \times [0, u_3]$$
$$\cap\ [0, w_{11}+w_{13}] \times [0, u_2] \times [0, w_{31}+w_{33}]$$
$$\cap\ [0, u_1] \times [0, w_{22}+w_{23}] \times [0, w_{32}+w_{33}]$$

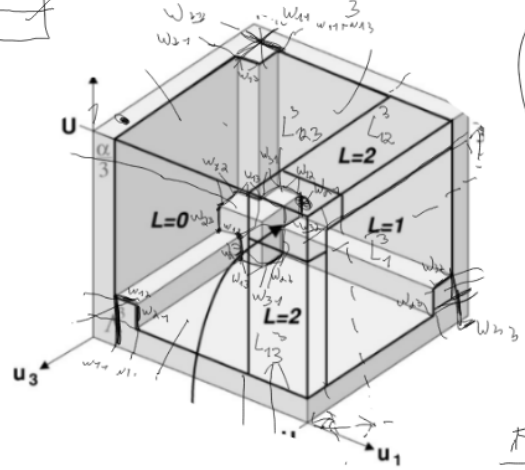

$$\begin{pmatrix} w_{11} & w_{12} & w_{13} \\ w_{21} & w_{22} & w_{23} \\ w_{31} & w_{32} & w_{33} \end{pmatrix}$$ Was

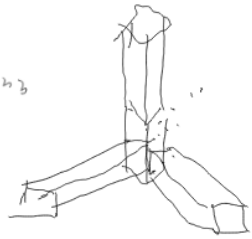

3 Seitenflächen

+3 Ergänzungen zum paarweisen Überlapp 12, 13, 23

Was mehrfach? was fehlt?

Treffpunkt aller 3 Seitenflächen im Ursprung?
Überlapp der 2-er Ergänzungen!

$f=0$:= Enthält keinen der gegebenen Zyklen
$k \geq T$:= Enthält mindestens die Zyklen T!

Vielleicht geht Induktion ja doch?

1. Beobachtungen: 3d:

Wenn die 01-Kombinationen die eine 1 treffen und die 0, und 1 Kombinationen eine der beiden 1-sen bleibt - Deb01 stehen

```
2D nicht vereinfacht

w00*(-w10 - w11 - w11 + 1.0) +
w11*(-w00 - w01 - w00 + 1.0)

+ (w00 + w01)*(w10 + w11)

2D vereinfacht
+ w00 + w11

+ w01*w10 -w00*w11

3D nicht vereinfacht
+ w00*(-w10 - w11 - w12 + 1.0)*(-w20 - w21 - w22 + 1.0)
+ w11*(-w00 - w01 - w02 + 1.0)*(-w20 - w21 - w22 + 1.0)
+ w22*(-w00 - w01 - w02 + 1.0)*(-w10 - w11 - w12 + 1.0)

+ (w00 + w01 + w02)*(w10 + w11 + w12)*(w20 + w21 + w22)

+ (w00*w12 + w02*w11 + (w00 + w01)*(w10 + w11))*(-w20 - w21 - w22 + 1.0)
+ (w00*w21 + w01*w22 + (w00 + w02)*(w20 + w22))*(-w10 - w11 - w12 + 1.0)
+ (w10*w22 + w11*w20 + (w11 + w12)*(w21 + w22))*(-w00 - w01 - w02 + 1.0)

TODO Zunahme und Abnahme von 2-Elementigen Produkten mit Zu- und Abnahme i

Vereinfacht:
```

Das gleiche geschieht wenn immer ein anderer w_{ai} getroffen wird

$-\text{Deb}\,01 \quad -\text{Deb}\,02 \quad -\text{Deb}\,03$
$+w_{20}\,\text{Deb}\,01$
$+w_{21}\,\text{Deb}\,01$
$+w_{22}\,\text{Deb}\,01$

$+w_{10}\,\text{Deb}\,02$
$+w_{11}\,\text{Deb}\,02$
$+w_{12}\,\text{Deb}\,02$
$+w_{00}\,\text{Deb}\,12$
$+w_{01}\,\text{Deb}\,12$
$+w_{02}\,\text{Deb}\,12$

0-1 in $\Lambda^{01}\left(w, \begin{bmatrix} w_{00}+w_{01}+w_{02} \\ w_{10}+w_{11}+w_{12} \end{bmatrix}\right) = w_{00}\cdot(w_{10}+w_{11}+w_{12}) + w_{11}(w_{20}+w_{21}+w_{22}) - w_{00}w_{11} + w_{01}w_{10}$

$w_{00}w_{02} + w_{02}w_{10} + w_{11}w_{00} + w_{11}w_{01} + w_{11}w_{02} + w_{01}w_{10}$

ein Punkt, passt alles!!!

$$\mathrm{Vol}(\Lambda^N(W,U)) = \sum_I (-1)^{|I|} |W_{II}| \prod_{k\in N\setminus I} u_k$$

$$\Lambda^N(W,U) = \bigcup_{\emptyset\neq I\subseteq N} \Lambda^I\Big(W, \big(\sum_{j\in N} w_{ij}\big)_I\Big) \times \Big[\sum_{j\in N} w_{k,k}, u_k\Big]_{k\in N\setminus I}$$

$$\mathrm{Vol}(\Lambda^N) = \sum_{I\subseteq N}\Big[\Big(\sum_{J\subseteq I} (-1)^{|J|+1} |W_{JJ}| \prod_{j\in I\setminus J} \sum_{k\in N} w_{jk}\Big) \prod_{k\in N\setminus I}\Big(u_k - \sum_{k\in N} w_{kk}\Big) + \Big(\prod_{i\in N}\sum_{j\in N} w_{ij}\Big)$$

↳ J: Maj. du graphen + u_k

$$= \sum_{\emptyset\subseteq I\subseteq N} (-1)^{|I|-1} |W_{II}| \prod_{k\in N\setminus I} u_k + \quad \text{only } J=I \text{ and all } \sum w_{kk}$$

$$(-1)^N |W_{NN}|$$

+ „Der ganze Rest muss sich wegkürzen"

Was sind alle I mit genau einem

Schreibe $N=3$ in dieser Form:

$J=1$ $I=N-J=2$ $1+2-3 \to -1$ ✓

$J=2$ $I=1$

$$\mathrm{Vol}(\Lambda^{012}(W,U)) = w_{00}\cdot\Big(u_1 - \sum_{j=1} w_{1j}\Big)\Big(u_2 - \sum_j w_{2j}\Big) +$$
$$w_{01}\cdot\Big(u_0 - \sum w_{0j}\Big)\Big(u_2 - \sum w_{2j}\Big) +$$
$$w_{02}\Big(u_0 - \sum w_{0j}\Big)\Big(u_1 - \sum w_{1j}\Big) +$$
$$\Big(w_{00}\cdot\sum w_{1j} + w_{11}\sum w_{0j} - (w_{00}w_{11} - w_{01}w_{10})\Big)\Big(u_2 - \sum w_{2j}\Big) +$$
$$\Big(w_{00}\cdot\sum w_{2j} + w_{22}\sum w_{0j} - (w_{00}w_{22} - w_{02}w_{20})\Big)\Big(u_1 - \sum w_{1j}\Big) +$$
$$\Big(w_{11}\cdot\sum w_{2j} + w_{22}\sum w_{1j} - (w_{11}w_{22} - w_{12}w_{21})\Big)\Big(u_0 - \sum w_{0j}\Big) +$$
$$\sum w_{0j}\cdot\sum w_{1j}\cdot\sum w_{2j}$$

Gruppiere Teile nach J ← in Deb., K ← u_k, I ← in $\sum w_{ij}$ ✓

$\sum_{J,K,I}$, $J\cup K\cup I = N$

$J=1$ $I=1$ $K=N-2$

$w_{00}\sum w_{1j}\prod_{k=2} u_k$ $I=\{0\}$, $J=\{0\}$ $I=\{0,1\}$ ✗ genauso ist es auch mit allen anderen!

$J=2$ $I=1$ $K=N-3$

$|W_{01,01}|\cdot\sum w_{2j}\prod_{k=3} u_k$

$I=J=\{0,1\}$ sign $=-$, $J=\{0,1\}\subset\{0,1,2\}=I$ sign$(+)$ → Kürzt sich weg ✓

$J=1$, $I=2$, $K=N-3$

$|W_{00}|\sum w_{1j}\sum w_{2j}\prod_{k=3} u_k$

$J=I=\{0\}$ 2 mal $-\sum w$ $V\zeta: +$

$J=\{0\}\subset I=\{0,1\}$ 1 mal $-\sum w$ $V\zeta: -$

$J=\{0\}\subset I=\{0,2\}$ 1 mal $-\sum w$ $V\zeta: -$

$J=\{0\}\subset I=\{0,1,2\}$ $V\zeta: +$

} Kürzt sich weg!

Allgemein:

$J=j$, $I=i$, $K=N-i-j$

$(-1)^i\binom{0}{0} + (-1)^{i-1}\binom{1}{1} + \dots + (-1)^0\binom{i}{i} = 0$ ✓

Was ist mit $K=0$?

↳ So wie dann, nur auf $I=\{N\}$ kann nichts ergänzt werden, also fehlt der letzte Faktor!

$\sum_{j=0}^{i-1}(-1)^{i-j}\binom{j}{j} = (-1)$ ↘ $(-1)^J$

Wegkürzung-Logik

Unterdeterminante

matches: in $J=\{0\}$ in $I\{0,1\}$ + u_2 mit + ; $J=I=\{0\}$ − $\sum w_{1j}$ + u_2 mit − → 0

Übrig bleibt sonst noch

$$\sum_{\emptyset\neq J\subseteq N} (-1)^{|J|} |W_{JJ}| \prod_{k\in N\setminus J} \sum_{k=1}^{N} w_{kk} + \prod_{m\in N}\sum_{n\in N} w_{mn}$$

Jetzt schreibe Funktion als Produkt über transitiven Komponenten

$p = z_1\cdots z_k$. $z_i := (u_{j_1}\dots u_{j_k})$ $z_i\cap z_j=\emptyset$, $\bigcup z_i = N \Leftrightarrow p$ permutation

Coefficient of p: $C_p = 1+\sum_{\emptyset\neq J\subseteq N} C_p^J = 1+\sum_{\emptyset\neq I\subseteq\{1\dots k\}} C_p^{\sum_{i\in I}|z_i|} = 1+\sum_{\emptyset\neq I\subseteq\{1\dots k\}} (-1)^{\sum_{i\in I}|z_i|+\sum_{i\in I}(|z_i|-1)}$

p matches $C_J \Leftrightarrow p|_J$ is permutation $\Leftrightarrow J = \bigcup_j z_{j'}$, sign of coefficient: $(-1)^{N-J}(-1)^{\mathrm{sign}(p|_J)} = (-1)^{N-J}(-1)^{\sum_j(|z_j|-1)} = C_J^p$

<u>Theorem:</u> $C_p = (-1)^{N-1}\cdot\mathrm{sign}(p)\cdot\delta_{|z_1|=N}$

Proof by induction on number of cycles z_i

$I=1$ $p=z_1$

$|z_1|=N \Rightarrow C_p = 1 = (-1)^{N-1}\cdot(-1)$ $(N-1) \to \mathrm{sign}(p)$ ✓

$|z_1|=J<N \Rightarrow C_p = 1 - C_{z_1} = 1+(-1)^{J+J-1} = 0$ ✓

$(-1)^{\sum_{i\in I}|z_i|+\sum_{i\in I}(|z_i|-1)}$

<u>Induction Step:</u>

$p_{i-1} = z_{j_1}\dots z_{j_{i-1}}$, $p_i := p_{i-1} z_j$

$$C_{p_i} = 1+\sum_{\emptyset\neq I\subseteq\{1\dots k\}} C_p^{\sum_{i\in I}|z_i|}$$

$$= 1 + \underbrace{\sum_{\emptyset\neq I\subseteq\{1\dots k-1\}} C_p^{\sum_{i\in I}|z_i|}}_{0} + \underbrace{C_p^{|z_{k_2}|}}_{-1} + \sum_{i\in\{1\dots k-1\}} C_p^{|z_{k_2}|+\sum_{i\in I}|z_i|}$$

$$= 0 - 1 + \sum_{i\in\{1\dots k-1\}} C_p^{\sum_{i\in I}|z_i|}(-1)$$

$=$ $N=3$ sei: $123 \Rightarrow 1$ $(12) \Rightarrow 0$ $(0) \Rightarrow 0$

$p=(0)(12)$ $C_p^0 = -1 - 1$

<u>1 Zyklus:</u> $\Sigma=N$: 1

$\Sigma<N$: $1-1$ sign$(p) = (-1)^N$ − H Zyklus

2 Zyklus: $+1-1-1+1$ $\Sigma<N$

$+1-1-1$ $\Sigma=N$

<u>Allgemein:</u> $1+\sum_{j=1}^{i-1}\binom{i}{j}(-1)^j + \delta_{\Sigma=N}\binom{i}{i}(-1)^i$

$$= \begin{cases}\sum_{j=0}^{i-1}(-1)^j\binom{i}{j}\cdot(-1)^{i-1} \\ 0 \quad \Sigma<N\end{cases}$$

$(-1)^{N+1}(-1)^{N-i} = (-1)^{2N-i-1} = (-1)^{i-1}$

Übrig bleibt hier:

$N=4$, $J=3$, $I=1$

$(-1)^{3-1}\cdot|W_{012,012}|\sum w_{3j}\cdot[-1]$ $(-1)^i$ $= -1$ × sign $p_J = -1$

$N=4$, $J=2$, $I=2$

$(-1)^{2-1}\cdot|W_{01,01}|\sum w_{2j}\sum w_{3j}\cdot[+1-1-1] = +1$ × sign $p_J = -1$

$N=4$, $J=1$, $I=3$

$(-1)^{1-1}\cdot|W_{00}|\sum w_{1j}\sum w_{2j}\sum w_{3j}\cdot[-1+3-3] = -1$ · sign $p_J = -1$

$N=3$, $J=2$, $I=1$

$(-1)^{2-1}|W_{01,01}|\cdot\sum w_{2j}\cdot[-1] = +1$ · sign$(J) = -1$

$N=3$, $J=1$, $I=2$

$(-1)^{1-1}|W_{0,0}|\sum w_{1j}w_{2j}\cdot[1-1-1] = -1$ · sign$(J) = -1$

↳ Quasi es kann doch nicht nur auf die Anzahl der Zyklen ankommen

$J=3$ (012) sign $=+1$

$(0)(12)$ sign $=-1$

$J=4$ (0123) -1

$(0)(123)$ $+1$

$(01)(23)$ $+1$

$1,4$ $\Rightarrow -1$

$2,3$ -1

$(0)(1)$ $(0)(12)$ = haben natürlich unterschiedliches Vorzeichen

aber alle Permutationen deren Summe der Länge i ist haben ein Vorzeichen was nur durch die Zahl der Zyklen bestimmt ist

Neue Berechnung mit Inklusion-Exclusion

- Vervollständige Zyklus Z_i der Länge n_i zur Länge n ohne einen Z_j $j<i$ zu treffen.

#. möglichen Vervollständigungen: $\binom{N}{n-n_i}$

möglichen Vervollständigungen, die $Z_{i_1}, \dots, Z_{i_j}$ enthalten: $\binom{N}{n-n_i-\sum_{k=1}^{j} n_{i_k}}$

möglicher Vervollständigungen ohne einen Zyklus Z_i:

$$\binom{N}{n-n_i} + \sum_{K \subset [i]} (-1)^{|K|} \binom{N}{n-n_i-\sum_{k \in K} n_k}$$

↳ Inklusion-Exclusion kann auch direkt für die Berechnung von $\#C_p^N$ verwendet werden

$$\#C_p^N = \binom{N}{i} - \left(\binom{N}{i} + \sum_{\emptyset \subset J \in \{1^{n_i}, \dots, N^{n_N}\}} (-1)^{|J|} \binom{N-\sum_{j \in J} j}{i-\sum_{j \in J} j} \right) = \sum_{\emptyset \subset J \in \{1^{n_i}, \dots, N^{n_N}\}} (-1)^{|J|+1} \binom{N-\sum_{j \in J} j}{i-\sum_{j \in J} j}$$

Multiset Multiset

Daraus ergibt sich

$$C_p = \sum_{i=1}^{N} \#C_p^i \cdot (-1)^{N-i}$$

$$= \sum_{i=1}^{N} (-1)^{N-i} \left(\sum_{\emptyset \subset J \in \{1^{n_i}, \dots, N^{n_N}\}} (-1)^{|J|+1} \binom{N-\sum_{j \in J} j}{i-\sum_{j \in J} j} \right)$$

Conjecture

$$C_p = \begin{cases} (-1)^{N-1} \operatorname{sign}(p) = (-1)^{N-1} (-1)^{\sum i \cdot n_i - \#\{n_i > 0\}} & \text{wenn } \sum i \cdot n_i = N \\ 0 & \text{wenn } \sum i \cdot n_i < N \end{cases}$$

← i.e. p Permutation

Beweis über Induktion über N und die möglichen Zyklusformen von $\sigma(N)$.

Erstmal Formel überprüfen für kleine n:

Achtung: Nicht 1^k sondern k^1 hier berechnet!

Vorbilderen

$\underline{N^1}$: $C_p = (-1)^{N-N} (-1)^{1-1} \binom{0}{0} = 1 = (-1)^{N-1} (-1)^{N-1}$

Nichtpermutation

$p' = 1^{N-1}$ $C_p = (-1)^{N-(N-1)} \cdot 1 + (-1)^{N-N} \cdot 1 = 0$

$p' = 1^{N-k}$ $C_p = \sum_{i=k}^{N} (-1)^{N-i} (-1)^{0} \binom{N-k}{i-k} = \sum_{i=0}^{N-k} (-1)^{N-i-k} \binom{N}{i-k} = 0$ ← binom. Formel $(1-1)^{N-k}$

~~Permutationen mit 2 Zyklenlängen:~~

Permutation $p = 1^N$

$$C_p = \sum_{i=1}^{N} (-1)^{N-i} \sum_{\emptyset \subset J \subseteq \{1^N\}} (-1)^{|J|-1} \binom{N-\operatorname{sum}(J)}{i-\operatorname{sum}(J)}$$

$$\sum (-1)^{N-i} \sum_{j=1}^{N} (-1)^{j-1} \binom{N}{j} \binom{N-j}{i-j} = \sum (-1)^{N-i} \sum (-1)^{j-1} \binom{N}{i} \binom{i}{j} = \sum_i (-1)^{N-i} \binom{N}{i} \sum_{j=1} (-1)^{j+1} \binom{i}{j}$$

$$= \sum_i (-1)^{N-i} \binom{N}{i} \left(\sum_{j=0} (-1)^{j+1} \binom{i}{j} + 1 \right)$$

$$= \sum_i (-1)^{N-i} \binom{N}{i} = (-1)^{N-1}$$

Nichtpermutation 1^k

Rechnung genauso nur dass die Summe bis maximal k geht

$$C_p^N = \sum_i (-1)^{N-i} \sum_{j=1}^{k} (-1)^{j-1} \binom{N}{j} \binom{N-j}{i-j} = \sum (-1)^{N-i} \sum_{j=1}^{k} (-1)^{j-1} \binom{N}{i} \binom{i}{j}$$

$$= \sum (-1)^{N-i} \binom{N}{i} \left(\sum_{j=0}^{k} (-1)^{j-1} \binom{i}{j} + 1 \right)$$

$$(i-k)\binom{i}{k} = i\binom{i-1}{k}$$

$$\sum (-1)^{N-i} \binom{N}{i} \left(1 + (-1)^{k+1} \binom{i-1}{k} \right)$$ ← Weiterrechnen und checken

$$-1^{N-1} + \sum (-1)^{N-i+k+1} \binom{N}{i} \binom{i}{k+1} \frac{k+1}{i}$$ ← hier stimmt was nicht ...

$$\binom{n}{m} = \frac{n}{m} \binom{n-1}{m-1}$$

$$\frac{m}{n} \binom{n}{m} = \binom{n-1}{m-1}$$

$$\binom{N}{k+1} \binom{N-(k+1)}{i-(k+1)} \Big| \binom{N}{j} \binom{N-j}{i-j} = \binom{N}{i} \binom{i}{j}$$

$$-1^{N-1} \binom{N}{k+1} \sum_i (-1)^{N-i} (-1)^{k+1} \binom{N-(k+1)}{i-(k+1)} \frac{k+1}{i}$$

i^k und für $i=0$ ... 2 ...

$$\sum_{j=0}^{k} (-1)^j \binom{n}{j} = (-1)^k \binom{n-1}{k},$$

with special case[8]

$$\sum_{j=0}^{n} (-1)^j \binom{n}{j} = 0$$

Frage: Wie kann ich diese Aussage allgemeinen

Induktiv über alle Permutationsformen

- Kann man die möglichen Zyklenformen schon induktiv herleiten?
  ↳ mögliche Zyklentypen gegeben durch Permutationen, kann also genau so rekursiv aufgebaut werden

Also was kann man zeigen:

Ganz einfach Induktion über Zyklenlänge

Induktionsanfang:

$$C^N_{1^k} = \delta^N_k = (-1)^{N-1} \cdot \mathrm{sign}(1^k) \cdot \delta^N_k$$

Richtiger Induktionsanfang:
Alle Zyklen haben same length l
$C^N_p = (-1)^{N-1} \cdot \mathrm{sign}(l^k) \cdot \delta^N_{l \cdot k}$

Induktionsschritt
Sei $p_i = z_1 \cdots z_{i-1}$ und $C^N_p = (-1)^{N-1} \mathrm{sign}(p) \cdot \delta^N_{\mathrm{sum}(p)}$ $\forall$ such p
Dann gilt die Aussage für $p_i = p \cdot z_i$

Beweis:

$$C_{p_i} = \sum_{i=1}^{N} (-1)^{N-i} \sum_{\emptyset \subset J \subset p_i} (-1)^{|J|-1} \binom{N-\mathrm{sum}(J)}{i-\mathrm{sum}(J)}$$

Now, to use the induction hypothesis, split the sum over J in parts that are from p_i and combination

$$C_{p_i} = \sum_i (-1)^{N-i} \left(\sum_{\emptyset \subset J \subseteq p_{i-1}} (-1)^{|J|-1} \binom{N-\mathrm{sum}(J)}{i-\mathrm{sum}(J)} + \sum_{\emptyset \subset J \subset p_{i-1}} (-1)^{|J|} \binom{N-\mathrm{sum}(J)-z_i}{i-\mathrm{sum}(J)-z_i} \right)$$

$$= \sum_i (-1)^{N-i} \left(\sum_{\emptyset \subset J \subseteq p_{i-1}} (-1)^{|J|} \binom{N-\mathrm{sum}(J)-z_i}{i-\mathrm{sum}(J)-z_i} \right)$$

$$= \sum_{i=0}^{N} (-1)^{N-i} \left((-1) \cdot \#C^{N-z_i\ i-z_i}_{p_{i-1}} \right)$$

$$= -\sum_{i=z_i+1}^{N} (-1)^{N-i} \cdot \#C^{N-z_i\ i-z_i}_{p_{i-1}}$$

$$= -\sum_{i=0}^{N-z_i} (-1)^{N-z_i-i} \cdot \#C^{N-z_i\ i}_{p_{i-1}}$$

$$= -(-1)^{N-z_i-1} \cdot \mathrm{sign}(p_i)\, \delta^{N-z_i}_{\mathrm{sum}(p_i)}$$

$$= (-1)^{N-1} \cdot \mathrm{sign}(p_i)\, (-1)^{1-z_i} \cdot \delta^{N-z_i+z_i}_{\mathrm{sum}(p_i)+z_i}$$

$$= (-1)^{N-1} \mathrm{sign}(p) \cdot \delta^N_{\mathrm{sum}(p)}$$

$\square$

Expected crosstalk between two networks connected via a certain overlap

Kommutationen $p = l^k$

$$C_p = \sum_{i=1}^{N} (-1)^{N-i} \sum_{\emptyset \subset J \subseteq \{l^k\}} (-1)^{|J|-1} \binom{N-\mathrm{sum}(J)}{i-\mathrm{sum}(J)}$$

$$= \sum (-1)^{N-i} \sum_{j=1}^{k} (-1)^{j-1} \binom{N}{lj} \binom{N-lj}{i-lj} = \sum (-1)^{N-i} \sum_{j=1}^{k} (-1)^{j-1} \binom{N}{i} \binom{i}{lj} =$$

$$= \sum_{i=1}^{N} (-1)^{N-i} \binom{N}{i} \sum_{j=1}^{k} (-1)^{j-1} \binom{i}{lj}$$

$$= \sum_{i=1}^{N} (-1)^{N-i} \binom{N}{i} \left(\sum_{j=0}^{\lfloor \frac{i}{l} \rfloor} (-1)^{j+1} \binom{i}{lj} + 1 \right)$$

$l = 1$ + und - tausch

1
1 1
1 2 1
1 3 3 1
1 4 6 4 1
1 5 10 10 5 1
1 6 15 20 15 6 1
1 7 21 35 35 21 7 1

$l = 2$

1
1 0 1
1 0 2 0 1
1 0 3 0 3 0 1
1 0 4 0 6 0 4 0 1
1 0 5 0 10 0 10 0 5 0 1
1 0 6 0 15 0 20 0 15 0 6 0 1
1 7 21 35 35 21 7 1

1
3
3
4
5
6

1
1 1
1 2 1
1 3 3 1
1 4 6 4 1
1 5 10 10 5 1
1 6 15 20 15 6 1
1 7 21 35 35 21 7 1

$$p' = 1^{N-k} \quad C_p = \sum_{i=k}^{N} (-1)^{N-i} (-1)^0 \binom{N-k}{i-k} = \sum_{i=0}^{N-k} (-1)^{N-i-k} \binom{N-k}{i} = 0$$

$(N-k)^1$

Binom. Formel $(1-1)^{N-k}$

$w = ($

Statistiken für Lawinengrößen!

$((u-(k+l)\beta)-m\beta)$

$(u-(k+l)\beta)^{m-1}\cancel{(u-(k+l+m)\beta)}$

$=(u-(k+l)\beta)^{m}-m\beta(u-(k+l)\beta)^{m-1}$

1. Originales CBE Modell: Herleitung der Rekursionsformel für $\bar{S}^m_{kl}(j)$

$\bar{S}^m_{kl}(j)$:= Volume of inhabited region leading to an avalanche of size $k+l+j$, when m units have not been active yet, k elements have fired, l are just now firing and $j<m$ units will fire until the avalanche stops.

$$\bar{S}^m_{kl}(j) = \begin{cases} V(\Pi^m(0,u-(k+l)\beta)\setminus \Pi^m(\frac{m\beta}{u-(k+l)\beta}, u-(k+l)\beta) = (u-(k+l)\beta)^m - m\beta(u-(k+l)\beta)^{m-1} & \text{if } j=0 \\ \uparrow j=0 \Rightarrow \text{at the end of the avalanche. All states are possible that are 1. inhabited 2. Which are not caused to fire by the input } k+l \text{ generated by the whole avalanche} \end{cases}$$

$$\sum_{i=0}^{j}\binom{m}{i}(l\beta)^i\,\bar{S}^{m-i}_{k+l,i}(j-i) \qquad j\le m$$

At an intermediate step during the avalanche, it is possible that now $i=0\dots j$ of the remaining units fire

Each combination of units to fire with the same i has equal contribution and can be counted by the $\binom{m}{i}$ factor

In the dimension of each unit i firing now, that states have to be such, that the k units did not cause them to fire previously, but the l additional units from the last step

Along the $m-i$ remaining units $k+l$ have already fired, i are firing just now and $j-i$ units have to fire until the avalanche stops!

Closed form expression for $\bar{S}^m_{k,l}(j)$ $\quad U>0,\ k+l+j<N \quad j\le m$ should be $k+l+j+m<N$ $(\le)$ wenn ersten Schritt mitgezählt wird

$$\bar{S}^m_{k,l}(j) = \binom{m}{j}\beta^j l(j+l)^{j-1}(u-(k+l+j)\beta)^{m-j-1}\cdot(u-(m+k+l)\beta)$$

klar klar ???

Beweis über Induktion over the number of remaining units m.

Basis. $m=1$ Region along indices not occuring in avs

$$\bar{S}^1_{k,l}(0) = (u-(k+l+0)\beta)^1 - 1\beta(u-(k+l+0)\beta)^0 = u-(k+l+1)\beta$$

$$\bar{S}^1_{k,l}(1) = (l\beta)^1$$

The only remaining unit has to fire (avs = N)

Induktion. Theorem proven for $m\le n-1 \Rightarrow$ holds also for $m=n$

⋮

Fall $m=2$ per Hand

Diff from Vol of neigh. Region along axes not occuring in the avalanche

$$\bar{S}^2_{kl}(0) = (u-(k+l)\beta)^1(u-(k+l+2)\beta)$$

$$\bar{S}^2_{kl}(2) = (pl)^2 + \binom{2}{1}(pl)^1 S^1_{k+l,1}(-1) = (pl)^2 + 2(pl) = \binom{2}{2}\beta^2 l(2+l)^1$$

all remaining units have to fire

$$\bar{S}^2_{k,l}(1) = \binom{2}{1}(l\beta)^1 S^1_{k+l,1}(0) = \binom{2}{1}(l\beta)(u-(k+l+1)\beta)$$

out of the remaining two units only one still has to fire

Extension of the recursion relation to this subnetwork situation

$$\bar{S}^{\vec{m}}_{\vec{k},\vec{l}}(\vec{j}) = \sum\binom{m}{i_{s_1} i_{s_2} i_{s_3}}\cdots$$

Für Neuroscience interessante Ergebnisse:

- Erklärn Lawinenstatistik für Modell ohne Inhibitoren

$$\begin{matrix} 1 & 0 \\ 0 & 0 \end{matrix} \quad \begin{matrix} 0 & 1 \\ 0 & 0 \end{matrix}$$

$$\begin{matrix} 1 & 0 \\ 1 & 0 \end{matrix} \quad \begin{matrix} 1 & 0 \\ 1 & 0 \end{matrix}$$

$$\begin{matrix} 1 & 0 \\ 0 & 1 \end{matrix} \quad \begin{matrix} 0 & 1 \\ 1 & 0 \end{matrix}$$

$$\begin{matrix} 1 & 0 & 0 \\ 0 & 1 & 0 \\ 0 & 0 & 1 \end{matrix}$$

gibt es auch davon alle Konfigurationen?

Goal: find avalanche size statistics for activated subnetwork and for non-activated subnetwork

- Wenn nur nutz aus Spikern: Normal CTRE model

⋮

Betrachte erstmal 2 eingeklappte Figures...

2. Verbesserte Mean Field Ansätze.
   Wie sehen hier Teil-Matrizen aus?

Innerhalb eines Subnetzwerkes:
Nur 1x1 Determinanten sind $\neq 0$

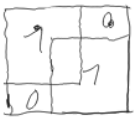

Betrachte Teilnetz aus nutz I. Unterschied nutz nur an ihren Nutzerzahlen $\alpha_1, u_1, u_2, u_{1+2}$

$|I| = 2$:

$$\begin{matrix} \{u_1, u_1\} \to \\ \{u_1, u_{12}\} \\ \{u_2, u_2\} \\ \{u_2, u_{12}\} \to \end{matrix} \Rightarrow \left| \begin{bmatrix} 1 & 1 \\ 1 & 1 \end{bmatrix} \right| = 0$$

$$u_1, u_2 \Rightarrow \left| \begin{bmatrix} 1 & 0 \\ 0 & 1 \end{bmatrix} \right| = \alpha^2$$

$$u_2, u_{12} \; \alpha \begin{bmatrix} 1 & 0 \\ 0 & 1 \end{bmatrix} \; \alpha^2$$

$|I| = 3$

Interessanter Fall: 2 aus einem Teilnetz, 1 aus einem anderen

u_1, u_1, u_3

$$\alpha \begin{pmatrix} 1 & 1 & 0 \\ 1 & 1 & 0 \\ 0 & 0 & 1 \end{pmatrix} \Rightarrow \text{auch } 0 \; !!!$$

$u_1 u_3 u_1 \Rightarrow$

$$\begin{pmatrix} 1 & 0 & 1 \\ 0 & 1 & 0 \\ 1 & 0 & 1 \end{pmatrix} \Rightarrow 0$$

Reihenfolge hier ist egal, da gleiche Permutation auf Reihen und Spalten angewendet wird $\Rightarrow$ Det. bleibt gleich!

Behauptung: Wenn 2 nutz aus dem gleichen Teilnetz ausgewählt werden, ist die Determinante 0

Oder Ordne $I = i_1 i_2 \dots i_N$

Sei $\text{subnets}(i_j) \cap \text{subnets}(i_k) \neq \emptyset$ und s_i in dem Schritt erhalten.

zz: W_{II} hat zwei abhängige Spalten.

Da $w_{kl} = \frac{\alpha}{N} \mathbb{1}\{\text{subnets}(k) \cap \text{subnets}(l) \neq \emptyset\}$ sind die Spalte $W_{j,\cdot}$ und $W_{k,\cdot}$ gleich! □

Zu genau dann, wenn fehlt noch:

Wenn alle Teilnetze nur 1 mal getroffen werden ist Det $\neq 0$

W_{II}: Permutation der Diagonalmatrix!

$|W_{II}| = \alpha^{|I|}$

Theorem: $|W_{II}| \neq 0 \iff \text{subnets}(i_j) \cap \text{subnets}(i_k) = \emptyset \;\; \forall k, j$
and if all subnet assignments are pairwise disjoint

$|W_{II}| = \binom{\alpha}{N}^{|I|}$

Wie sieht das mit overlap aus?

Berechne nichtlineares Volumen - Frage wie oft sind Determinante $\neq 0$

$\lvert I \rvert$	# Dets
1	N
2	$\binom{\alpha}{N}$
3	$\binom{3}{N}$
c	$\binom{c}{N}$

$$\Rightarrow \mathrm{Vol}(\Delta^N(W, u)) = \sum_{\emptyset \neq I \subseteq N} (-1)^{|I|-1} |W_{II}| \cdot \prod_{j \in N \setminus I} u_j$$

$\underline{u} = \mathbb{1} \cdot u$

$$\left(\frac{\frac{\alpha}{N}}{\frac{\alpha}{N}+u}\right)^s \cdot \left(\frac{u}{\frac{\alpha}{N}+u}\right)^{N-s} \cdot \left(\frac{\alpha}{N}+u\right)^N$$

Hier wird angenommen dass es keinen Überlapp gibt!

$$= \sum_{s=1}^{|N|} (-1)^{s+1} \binom{s}{|N|} \left(\frac{\alpha}{N}\right)^s \cdot u^{|N|-s} \cdot N$$

$\hat{=}$ Wahrscheinlichkeit innerhalb Teilnetz

$$= \left(\frac{\alpha}{N}+u\right)^N \cdot \left[\mathbb{P}[m \text{ odd}] - \mathbb{P}[m \text{ even}]\right] \text{ für } m \sim \mathrm{Binom}\left(N, \frac{1}{1+\frac{\alpha u}{\alpha}}\right)$$

← noch anpassen

Andere Ansatz: Ist das eine ausmultiplizierte binomische Formel?

$$= -\left(\sum_{s=1}^{N} \binom{s}{N} \left(-\frac{\alpha}{N}\right)^s u^{N-s}\right)$$

$$= -\left(\sum_{s=0}^{N} \binom{s}{N} \left(-\frac{\alpha}{N}\right)^s u^{N-s}\right) + u^N = u^N - \left(u - \frac{\alpha}{N}\right)^N > 0$$

Wenn u_s nicht gleich sind ist die Verallgemeinerung $\prod u_i - \prod(u_i - \frac{\alpha}{N})$ sehr wahrscheinlich wahr:)

$$\tilde{L}_{p,N} = [1-\Delta U, 1]_i \times [1 - w_{2j\,i}, 1]_{j=1..g_i} \times [1 - w_{3j\,i} - \sum_{k=1}^{g_2} w_{3j\,2k}, 1 - w_{3j\,i}]_{j=1..g_3}$$

$$\times \dots \times [1 - w_{\omega j\,i} - \sum_{k=1}^{\omega-1} \sum_{l=1}^{g_k} w_{\omega j\,kl}, 1 - w_{\omega j\,i} - \sum_{k=1}^{\omega-1} \sum_{l=1}^{g_k} w_{\omega j\,kl}]_{j=1..g_\omega}$$

$$L_{p,N} = \tilde{L}_{p,N} \times \left([0, 1 - \sum_{k=1}^{\omega-1} \sum_{l=1}^{g_k} w_{j\,kl}]_{j \in p^c} \setminus \Lambda^{p^c}(w, 1 - \sum_{k=1}^{\omega-1} \sum_{l=1}^{g_k} w_{j\,kl})_{j \in p^c}\right)$$

$$\mathrm{vol}(\tilde{L}_p^N) = \Delta U \cdot \prod_{j=1}^{g_2} w_{2j\,i} \cdot \prod_{d=3}^{\omega} \prod_{j=1}^{g_d} \sum_{k=1}^{g_{d-1}} w_{d\,j\,d-1\,k}$$

Hier: $w_{ij} = \frac{\alpha}{N} \mathbb{1}\{\mathrm{subnetw}(i) \cap \mathrm{subnetw}(j) \neq \emptyset\}$

Wende statistische Mechanik auf die Spikering patterns an

Lösung 1: $\{s \leq j\}$

$\{s \leq i \leq j\}$

Andere Frage: Unter allen spikering patterns der größe s, welche sind gleichwahrscheinlich?

In jedem Schritt der Lawine zählt nur:

Wie viele der j Feuernden Elementen sind in welchen Teilnetzwerken

↳ Situation einfacher ohne overlap!

↳ Da ist die Situation trivial! Lawinencharakteristik ist die Statistik in Teilnetzwerk der Lawine

- Sehe overlap als eigene Klasse an! Bei 3 Netzwerkten gibt es dann

$s_1, o_{12}, s_2, o_{23}, s_3, o_{31}$. Größe Teilnetzwerk $N_i = N_i = o_{i,i-1} + o_{i,i+1} + \tilde{N}_i$

per Ile c.

↳ spikering patterns are distributed only by the number in each category each step

$$\begin{pmatrix} 2 \\ 3 \\ 0 \\ 4 \\ \vdots \end{pmatrix},$$

Performance of 2-afc classifier

Classifier specification

$$c_{s_0}(avs_1, avs_2) = \begin{cases} 1 & \text{if } \#\{av \mid av \in avs_1,\ sig(av) \geq s_0\} > \#\{av \mid av \in avs_2,\ sig(av) \geq s_0\} \\ 2 & \text{otherwise} \end{cases}$$

Question: Given the distributions avs_1, avs_2 what is the performance of the classifier?

Performance measure: Accuracy.

- Wlog avs_1 is the avalanche distribution with figure present

$$\mathbb{P}[Cl_{s_0}(avs_1, avs_2) = 1] = \overset{?}{}$$

2. Bernoulli experiments. Each sample of avs_1 and avs_2 is either $\leq s_0$ or $> s_0$ with respective probabilities:

$$P_{avs_1}(av \leq s_0) = F_{avs_1}(s_0) = \mathbb{P}(th_1 = 0)$$
$$P_{avs_2}(av \leq s_0) = F_{avs_2}(s_0) = \mathbb{P}(th_2 = 0)$$

, thus th_1 and th_2 are bernoulli R.V.

This results in the two threshold distributions ths_1 and ths_2 which are binomially distributed with

$$ths_1 \sim Binom(n_1, F_{avs_1}(s_0)), \quad ths_2 \sim Binom(n_2, F_{avs_2}(s_0))$$

Now,

$$\mathbb{P}[Cl_{s_0}(avs_1, avs_2) = 1] = \mathbb{P}[ths_1 > ths_2]$$

$$\mathbb{P}[ths_1 > ths_2] = \sum_{i=1}^{n_1} \mathbb{P}[ths_1 = i] \cdot F_{ths_2}(i-1)$$

$$= \sum_{i=1}^{n_1} \binom{n_1}{i} F_{avs_1}(s_0)^i (1 - F_{avs_1}(s_0))^{n_1 - i} \cdot \left(\sum_{j=0}^{i-1} \binom{n_2}{j} \cdot F_{avs_2}(s_0)^j (1 - F_{avs_2}(s_0))^{n_2 - j} \right)$$

closed form for F_{ths_2}

$$= \sum_{i=1}^{n_1} \binom{n_1}{i} F_{avs_1}(s_0)^i (1 - F_{avs_1}(s_0))^{n_1 - i} \cdot (n_2 - i + 1) \binom{n_2}{i-1} \int_0^{1 - F_{avs_2}(s_0)} t^{n_2 - i} (1-t)^{i-1} \, dt$$

This probability can also be approximated using the fact that:

$$\log\left(\frac{\frac{ths_1}{n_1}}{\frac{ths_2}{n_2}}\right) \sim \mathcal{N}\left(\log \frac{F_{avs_1}(s_0)}{F_{avs_2}(s_0)}, \frac{1}{ths_1} + \frac{1}{ths_2} - \frac{1}{n_1} - \frac{1}{n_2}\right) =: \mathcal{N}_{thr}$$ [Katz D. et. al 1978. Biometrics 34: 469-474]

$$\frac{ths_1}{ths_2} \geq 1 \iff \frac{ths_1}{ths_2} \cdot \frac{n_2}{n_1} \geq \frac{n_2}{n_1}$$

$$\mathbb{P}[Cl_{s_0}(avs_1, avs_2) = 1 \mid n_1, n_2] = \mathbb{P}[ths_1 > ths_2 \mid n_1, n_2] = \mathbb{P}\left[\log\left(\frac{ths_1}{ths_2} \cdot \frac{n_2}{n_1}\right) > \log\left(\frac{n_2}{n_1}\right)\right] \approx 1 - F_{\mathcal{N}_{thr}}\left(\frac{n_2}{n_1}\right)$$

Question: What are the distribution of rates (n_1, n_2) for figure and background activation?

Nochmal aber mit Overlap!

Da kann man ganz normal schreiben und das geht auch

If submats(I) contains no overlap units

$|W_{I,I}| \neq 0 \iff$ no common S_k in I

Wenn I ein O_{12} Element beinhaltet (vermeiden 2 solche hat ist trivialerweise $|W_{I,I}| = 0$

$O_{ij}, O_j \Rightarrow$ muss b nicht contain

$S_i O_{ij} O_j$

$\begin{matrix} 1 & 1 & 0 \\ 1 & 1 & 1 \\ 0 & 1 & 1 \end{matrix}$

Liste alle Kombinationen die zu 0 werden und 0's enthalten

$|I|=2$: O_{ij}, $O_{i,i+1} O_{i-1,i}$

$|I|=3$: $S_i S_j O_{ik}$, $O_{i-1,i} S_i O_{i,i+1}$

$|I|=4$: $S_i S_j S_k O_{il}$ .....

Einfachster Fall 2 Nebenzu

Determinants remaining

$\{S_1\}, \{O_{12}\}, \{S_2\}, \{O_{21}\}$

$\{S_1, S_2\}$,

$\{S_1, S_2, O_{12}\}, \{S_1, S_2, O_{21}\}, \cancel{\{O_{21}, S_1, O_{12}\}}, \cancel{\{O_{12}, S_2, O_{21}\}}$

$\cancel{\{S_1, O_{12}, S_2, O_{21}\}}$

Values of the Determinants

$|I|=1$: $\{S_1\}, \{O_{12}\}, \{S_2\}, \{O_{21}\} \Rightarrow \frac{\alpha}{N}$

$|I|=2$:

$J: \{S_1, S_2\} \Rightarrow |W_{JJ}| = \left|\begin{pmatrix} 1 & 0 \\ 0 & 1 \end{pmatrix}\right| = \left(\frac{\alpha}{N}\right)^2$

$|I|=3$

$J = \{S_1, O_{12}, S_2\} \Rightarrow |W_{JJ}| = \left|\frac{\alpha}{N}\begin{pmatrix} 1 & 1 & 0 \\ 1 & 1 & 1 \\ 0 & 1 & 1 \end{pmatrix}\right| = -\left(\frac{\alpha}{N}\right)^3$

$J: \{S_2, O_{21}, S_1\} \Rightarrow |W_{JJ}| = \left|\frac{\alpha}{N}\begin{pmatrix} 1 & 1 & 0 \\ 1 & 1 & 1 \\ 0 & 1 & 1 \end{pmatrix}\right| = -\left(\frac{\alpha}{N}\right)^3$

conditions can be grouped

$|I|=4$

$J = \{S_1, O_{12}, S_2, O_{21}\} \Rightarrow |W_{JJ}| = \left|\frac{\alpha}{N}\begin{pmatrix} 1 & 1 & 0 & 1 \\ 1 & 1 & 1 & 1 \\ 0 & 1 & 1 & 1 \\ 1 & 1 & 1 & 1 \end{pmatrix}\right| = 0$

$S_1 \uplus S_2 \uplus O_{12} \uplus O_{21}$

$$\mathrm{Vol}(\Lambda^N(W, U)) = \sum_{i \in N} \frac{\alpha}{N} \cdot \prod_{k \in N \setminus I} u_k \quad |I|=1$$

$$+ \sum_{\substack{i \in S_1 \\ j \in S_2}} \left(\frac{\alpha}{N}\right)^2 \cdot \prod_{k \in N \setminus \{i,j\}} u_k \quad |I|=2$$

$$- \sum_{\substack{i \in S_1 \\ j \in S_2 \\ k \in O_{12} \uplus O_{21}}} \left(\frac{\alpha}{N}\right)^3 \cdot \prod_{l \in N \setminus \{i,j,k\}} u_l \quad |I|=3$$

Wenn $u = 1$:

$$\mathrm{Vol}(\Lambda^N(W, I)) = N\left(\frac{\alpha}{N}\right) + |S_1||S_2|\left(\frac{\alpha}{N}\right)^2 - (|S_1||S_2| - |O_{12} \uplus O_{21}|)\left(\frac{\alpha}{N}\right)^3$$

zu Ordnung $\left(\frac{\alpha}{N}\right)^1$ ändert sich nichts

Ok, jetzt die Formel zu den Avalanche Patterns:

size(av) = 1:

$$\mathrm{Vol}(\{S_1\}) = \Delta u \cdot \mathrm{Vol}(\Lambda^{N \setminus S_1}(W, (1 - w_{jS_1})_{j \in N \setminus \{S_1\}})$$

$$= \Delta u \cdot \mathrm{Vol}\left(\Lambda^{N \setminus S_1}\left(W, \begin{pmatrix} 1 - \frac{\alpha}{N} 1_{[S_1 \uplus O_{12}, O_{21}]} \\ 1_{[S_2]} \end{pmatrix}\right)\right)$$

Hier schon was falsch!!!

$$= \Delta u \Big[\frac{\alpha}{N}\Big((|S_1|-1)\left(1-\frac{\alpha}{N}\right)^{N-|S_2|-2} + (|O_{12}| + |S_2| + |O_{21}|)\left(1-\frac{\alpha}{N}\right)^{N-|S_2|-1}\Big)$$

$$+ \left(\frac{\alpha}{N}\right)^2 (|S_1|-1)(|S_1|-1)\left(1-\frac{\alpha}{N}\right)^{N-|S_2|-3}$$

$$- \left(\frac{\alpha}{N}\right)^3 (|S_2|)(|S_1|-1)(|O_{12}| + |O_{21}|)\left(1-\frac{\alpha}{N}\right)^{N-|S_2|-3} \Big]$$

Ok, jetzt die Formel zu den Avalanche Patterns:

size(av) = 1:

$$\mathrm{Vol}(\{s_1\}) = \Delta u \cdot \mathrm{Vol}(\Lambda^{N\setminus s_1}(W, (1-w_{j s_1})_{j \in N\setminus\{s_1\}}))$$

$$= \Delta u \cdot \mathrm{Vol}\left(\Lambda^{N\setminus s_1}\left(W, \begin{pmatrix} 1-\frac{\alpha}{N}\,[s_1 \text{ or } o_{12}, o_{21}] \\ 1_{[s_2]} \end{pmatrix}\right)\right)$$

$$= \Delta u \Big[\tfrac{\alpha}{N}\Big((|s_1|-1)(1-\tfrac{\alpha}{N})^{N-|s_2|-2} + (|o_{12}|+|s_2|+|o_{21}|)(1-\tfrac{\alpha}{N})^{|N|-|s_1|-3}\Big)$$
$$+(\tfrac{\alpha}{N})^2 (|s_1|-1)(|s_1|-1)(1-\tfrac{\alpha}{N})^{|N|-|s_2|-3}$$
$$-(\tfrac{\alpha}{N})^3((|s_2|(|s_1|-1)(|o_{12}|+|o_{21}|)(1-\tfrac{\alpha}{N})^{|N|-|s_2|-3}\Big]$$

$$\mathrm{Vol}(\{o_{12}\}) = \Delta u \cdot \mathrm{Vol}\left(\Lambda^{N\setminus s_1}\left(W, \begin{pmatrix} 1-\frac{\alpha}{N}\,N\setminus\{o_{12}\} \\ \cdot \end{pmatrix}\right)\right)$$

TODO correct this

$$\Delta u \Big[\tfrac{\alpha}{N}\Big((|o_{12}|-1)(1-\tfrac{\alpha}{N})^{N} + (|s_1|+|s_2|+|o_{21}|)(1-\tfrac{\alpha}{N})^{|N|-3}\Big)$$
$$+(\tfrac{\alpha}{N})^2 \quad |s_1|^2 \quad (1-\tfrac{\alpha}{N})^{|N|-3}$$
$$-(\tfrac{\alpha}{N})^3((|s_2|\,|s_1|(|o_{12}|-1+|o_{21}|)(1-\tfrac{\alpha}{N})^{|N|-3}\Big]$$

$|I| = 2$

$$\mathrm{Vol}(\{s_1, s_2\}, \{s_1, s_2\}) = \Delta u \cdot \tfrac{\alpha}{N} \cdot \mathrm{Vol}\left(\Lambda\left(W, \begin{pmatrix} (1-\alpha\frac{\alpha}{N}) & N\setminus\{s_1,s_2,o_{12},o_{21}\} \\ 1 & s_2 \end{pmatrix}\right)\right)$$

$\mathrm{Vol}(\{s_1\}, \{s_2\}) = \Delta u \cdot 0$:) haha sehr gut!

<u>In general:</u>

Given count of $av = \begin{pmatrix} n_{s_1} \\ n_{s_2} \\ n_{o_{12}} \\ n_{o_{21}} \end{pmatrix}$ occuring in the avalanche, what is the volume of the noninhabited region along the remaining axes

Total inputs to

$$\begin{matrix} s_1 & n_{s_1}+n_{o_{12}}+n_{o_{21}} \\ s_2 & n_{s_2}+n_{o_{12}}+n_{o_{21}} \\ o_{12} & n_{s_1}+n_{s_2}+o_{12}+o_{21} \\ o_{21} & n_{s_1}+n_{s_2}+o_{12}+o_{21} \end{matrix} = acb = M \cdot av = \begin{pmatrix} 1 & 0 & 1 & 1 \\ 0 & 1 & 1 & 1 \\ 1 & 1 & 1 & 1 \\ 1 & 1 & 1 & 1 \end{pmatrix} \begin{pmatrix} n_{s_1} \\ n_{s_2} \\ n_{o_{12}} \\ n_{o_{21}} \end{pmatrix}$$

$u_{e_2} = 1 - acb$ $\quad N_{s_1} = |s_1|$ $\quad n_{s_1} :=$ # units in av in sub s_1

$$\mathrm{Vol}(\Lambda^{N\setminus av}(W, 1 - M\cdot av)) = \tfrac{\alpha}{N}\cdot\Big[\sum_{i\in\{s_1,s_2,o_{12},o_{21}\}} (N_i - s_i)\prod_{j\in T}(1-acb_j)^{N_j - n_j - \delta_j^{n_i}}\Big] \leftarrow 1\times 1 \text{ Determinants}$$
$$+(\tfrac{\alpha}{N})^2\cdot\Big[(N_{s_1}-n_{s_1})(N_{s_2}-n_{s_2})\prod_{j\in T}(1-acb_j)^{N_j-n_j-\delta_j^{s_1}-\delta_j^{s_2}}\Big]$$
$$-(\tfrac{\alpha}{N})^3\cdot\Big[(N_{s_1}-n_{s_1})(N_{s_2}-n_{s_2})\Big[(N_{o_{12}}-n_{o_{12}})\prod_{j\in I}(1-acb_j)^{N_j-n_j-\delta_j^{s_1}-\delta_j^{s_2}-\delta_j^{o_{12}}} + (N_{o_{21}}-n_{o_{21}})\prod_{j\in I}(1-acb_j)^{N_j-n_j-\delta_j^{s_1}-\delta_j^{s_2}-\delta_j^{o_{21}}}\Big]\Big]$$

In den 2-Network setting o_{12} and o_{21} are completelly equivalent $\quad o = o_{12} \vee o_{21}$

↳ Reduce Problem to 3 variables s_1, o, s_2

$$av = \begin{pmatrix} n_{s_1} \\ n_{s_2} \\ o \end{pmatrix} \quad I = \{s_1, s_2, o\} \quad N = \begin{pmatrix} N_{s_1} \\ N_{s_2} \\ N_o \end{pmatrix} \quad M = \begin{pmatrix} 1 & 0 & 1 \\ 0 & 1 & 1 \\ 1 & 1 & 1 \end{pmatrix} \quad acb = M \cdot av$$

$$\mathrm{Vol}(\Lambda^{N-av}(W, acb)) = \tfrac{\alpha}{N}\cdot\Big[\sum_{i\in I}(N_i - n_i)\prod_{j\in I}(1-acb_j)^{N_j-n_j-\delta_j^{n_i}}\Big]$$
$$+(\tfrac{\alpha}{N})^2\cdot\Big[(N_{s_1}-n_{s_1})(N_{s_2}-n_{s_2})\prod_{j\in I}(1-acb_j)^{N_j-n_j-\delta_j^{s_1}-\delta_j^{s_2}}\Big]$$
$$-(\tfrac{\alpha}{N})^3\cdot\Big[(N_{s_1}-n_{s_1})(N_{s_2}-n_{s_2})(N_o-n_o)\prod_{j\in I}(1-acb_j)^{N_j-n_j-\delta_j^{s_1}-\delta_j^{s_2}-\delta_j^{o}}\Big]$$

For the calculation of the avalanche pattern volume, only the vectors $av^i = \begin{pmatrix} \vdots \\ n_{s_1}^i \\ n_{s_2}^i \\ n_o^i \end{pmatrix}$ for units of the classes funny in each step i.

Number of Steps

$N = 1$

$\mathrm{Vol}(av_1) = \Delta u \cdot \mathrm{Vol}^{N-av_1}(W, acb)$

$N = 1 \rightarrow$ Do the case distinction carefully

$N \geq 2$ Calculate contributing factors and group terms by same occuring noninhabited region

→ Extension to original EHE paper

- going from j to $\vec{j} \begin{pmatrix} j_{s_1} \\ j_{s_2} \\ j_o \end{pmatrix}$

- each state is splitted into combinations $\vec{j}$ with $\mathrm{sum}(\vec{j}) = j$

↳ hopefully simple modification of closed form for avalanche sizes!

↳ Aber erst morgen....

Heute Todos Fragen in der mail noch angucken!!!

$$\mathrm{Vol}(R_{av}=(\varphi_i)_{i\in\{1..\infty\}}) = \Delta u \cdot \prod_{i=2}^{\infty}\prod_{j\in\varphi_i}\Big(\sum_{k\in\varphi_{i-1}} w_{jk}\Big)\Big[\prod_{l\in N\setminus av}\big(1-\mathrm{acb}(av,l,\infty)\big) - \mathrm{Vol}\big(\Delta^{N-av}(W, 1-\mathrm{acb}(av,l,d)_{l\in N\setminus av})\big)\Big]$$

Für die Situation hier wird $\varphi_i = \begin{pmatrix} n^i_{s_1} \\ n^i_{s_2} \\ n^i_0 \end{pmatrix}$ this results in

$$\mathrm{Vol}((\varphi_i)_{i=1..\infty}) = \Delta u \cdot \prod_{i=2}^{\infty} \Big(\frac{\alpha}{N}\cdot(n^{i-1}_{s_1}+n^{i-1}_0)\Big)^{n^i_{s_1}} \cdot \Big(\frac{\alpha}{N}(n^{i-1}_{s_2}+n^{i-1}_0)\Big)^{n^i_{s_2}} \cdot \Big(\frac{\alpha}{N}(n^{i-1}_{s_1}+n^{i-1}_{s_2}+n^{i-1}_0)\Big)^{n^i_0} \cdot \mathrm{Vol}\big(\Delta^{N-\sum_i \varphi_i}(W, M\cdot\sum_i \varphi_i)\big)$$

$$= \Delta u \cdot \prod_{i=2}^{\infty}\Big(\frac{\alpha}{N}\Big)^{|\varphi_i|}\cdot\big(M\cdot\varphi_{i-1}\big)^{\varphi_i}\cdot \mathrm{Vol}\big(\Delta^{N-\sum_i\varphi_i}(W, M\cdot\sum_i\varphi_i)\big)$$

Jetzt Vorgehen parallel zum Vorgehen im Originalen EHC Paper: Formel $x^{b^3} = \prod a_i^{b_i}$

Dazu Volumina der einzelnen avalanche Patterns für $W_{ij} = \frac{\alpha}{N}$ aufstellen:

$$\mathrm{Vol}((\varphi_i)_{i\in 1..\infty}) = \Delta u \cdot \prod_{i=2}^{\infty}\Big(\frac{\alpha}{N}\cdot\varphi_{i-1}\Big)^{\varphi_i}\cdot\Big[\Big(1-\sum|\varphi_i|\frac{\alpha}{N}\Big)^{N-\sum_i\varphi_i} - \sum_i \varphi_i\frac{\alpha}{N}\cdot\Big(1-\sum|\varphi_i|\frac{\alpha}{N}\Big)^{N-\sum|\varphi_i|-1}$$

Beispiel $\sum\varphi_i = 6$

$N=6$

Av:		
	1; 5	$\Delta u\cdot\frac{\alpha}{N}^5\cdot\ldots$
	1; 1; 4	$\Delta u\cdot\frac{\alpha}{N}^1\cdot\frac{\alpha}{N}^4\cdot\ldots = \Delta u\cdot\frac{\alpha}{N}^5\cdot\ldots$
	1; 2; 3	$\Delta u\cdot\frac{\alpha}{N}^2\cdot(2\frac{\alpha}{N})^3 = \Delta u\cdot(\frac{\alpha}{N})^5\cdot 2^3$
	1; 3; 2	$\Delta u\cdot\frac{\alpha}{N}^3\cdot(3\frac{\alpha}{N})^2 = \Delta u\cdot(\frac{\alpha}{N})^5\cdot 3^2$
	1; 4; 1	$\Delta u\cdot\frac{\alpha}{N}^4\cdot 4\frac{\alpha}{N}^3 = \Delta u\cdot(\frac{\alpha}{N})^5\cdot 4^1$
	1; 1; 1; 3	$\Delta u\cdot\frac{\alpha}{N}^1\cdot\frac{\alpha}{N}^1\cdot\frac{\alpha}{N}^3 = \Delta u\cdot\frac{\alpha}{N}^5$
	1; 1; 2; 2	$\Delta u\cdot\frac{\alpha}{N}^1\cdot\frac{\alpha}{N}^2\cdot(2\frac{\alpha}{N})^2 = \Delta u\cdot\frac{\alpha}{N}^5\cdot 2^2$
	1; 1; 3; 1	$\Delta u\cdot\frac{\alpha}{N}^1\cdot\frac{\alpha}{N}^3\cdot(3\frac{\alpha}{N})^1 = \Delta u\cdot\frac{\alpha}{N}^5\cdot 3^1$
	1; 2; 1; 2	$\Delta u\cdot\frac{\alpha}{N}^2\cdot(2\frac{\alpha}{N})^1\cdot\frac{\alpha}{N}^2 = \Delta u\cdot\frac{\alpha}{N}^5\cdot 2^1$
	1; 2; 2; 1	$\Delta u\cdot\frac{\alpha}{N}^2\cdot(2\frac{\alpha}{N})^2\cdot(2\frac{\alpha}{N})^1 = \Delta u\cdot\frac{\alpha}{N}^5\cdot 2^2\cdot 2^1$
	1; 3; 1; 2	$\Delta u\cdot\frac{\alpha}{N}^3\cdot(3\frac{\alpha}{N})^1\cdot\ldots$ 3^1
	1; 1; 1; 1; 2	1
	1; 1; 1; 2; 1	2
	1; 1; 2; 1; 1	2
	1; 2; 1; 1; 1	2

Critical subnetworks for feature Integration

Malte Schumacher, Nergis Tomen, Udo Ernst
Uni Bremen Theoretical Neurophysics

1. Motivation

- Integrating local distributed informations into global, coherent percepts
- Important in feature Integration
- and more abstractly binding problem

- We propose to encode perceptual figures as subnetworks operating close to criticality while activity in background elements remains subcritical

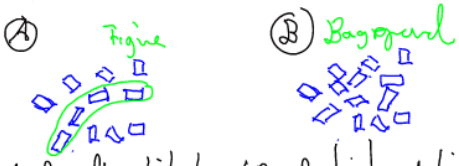

Avalanche statistics / Population activity

Coincidence detection as neural readout mechanism to classify figure vs background

2. Model description

- We use a generalization of the mathematically tractable CHE-Model which generates critical dynamics for certain connectivity strength.
- N rate units, $u_i \in [0,1]$

$$\hat{u}_i(t+1) = u_i(t) + I_i^{ext}(t) * I_i^{int}(t)$$

$$u_i(t+1) = \begin{cases} \hat{u}_i(t+1) & \text{if } \hat{u}_i(t+1) < U \\ \hat{u}_i(t+1) - U & \text{otherwise} \end{cases}$$

$$A_i(t) = \mathbb{1}_{u_i(t) > U}$$

$$I_i^{ext}(t) = \mathbb{1}_{r(t)=0 \wedge \|A(t)\|_\infty = 0} \cdot \Delta U$$

infinite separation of timescales

$$I_i^{int}(t) = \sum_j W_{ij} A_j(t-1)$$

- (For $W > 0$ Dynamics of this model is a shift on the N-torus and spiking behavior can be analysed mathematically)

for $W_{ij} = \alpha$ the model shows power law avalanche statistics for

$$\alpha_N^{crit} = \frac{1 - \frac{1}{\sqrt{N}}}{N}$$

Embedding figures as critical subnetworks

Task: Given a Network of N_u total units, embed an ensemble of N_e figures, each consisting of N_s units.

Algorithm:
- Choose each ensemble by draws of N_s units without replacement from $1 \dots N_u$
- couple all units in an ensemble all-to-all with coupling strength $\alpha_{N_s}^{crit}$
- couple units belonging to different subsets with inhibitory weight $-\beta$

Visualization of weight Matrices:

$N_u = 10 \quad N_s = 4 \quad N_c = 3$

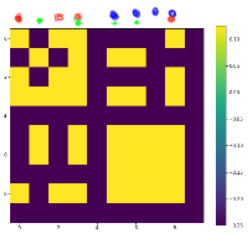

Bernstein Workshop Information Transmission

Wolf Singer:

Unexplained:
↳ ultrafast access to memory
↳ ultrafast ~~ex~~ comparison of new stimulus with priors (<250 ms)

Focus on recurrent networks with delays! recurrent
↳ Reservoir computing + Liquid state machines
↳ Priors stored in recurrent connections
↳ Stimuli matching priors
↳ oscillations → low dimensional substates
↳ these substates induce learning

Testing: ✓ Testing inf. contents by training linear classifiers

Max Tegmark: How distributed is distr. computation

External signals change information routing direction
Initial states determine information routing pattern

(Stuart Landau oscillator)
Local changes change information routing patterns

Dynamic & flexible controllable patterns of IRPs in large networks
↳ generalises to Schnitzler IRP

Local structural changes → nonlocal change in IRP
↳ sharp switch!

Kirst et al Nature Comm. (2016)

Bettinger: Flexible Information routing via transient synchrony.
Ole et & Gielen et al 2012 Switching Neuronal Inputs ..
Akerlen selectively gates arXiv

Transfer entropy analysis of CTC 2013, with Wolf & Geisel, Phys 2012
with et al Frank Varela Cortex 2012

Oscillo-patrians vs Oszillation skeptics

→ Oszillations are not mechanomes Shepelev group
Frequency uncertainty Maunsell Neuron 2010
→ Jia, Xing & Kahn J Neuro Frequency and gamma band power

↳ Effects of lags on CTC?
- model transient synchrony
→ Palmigiano 2017

Kirst: shifting attention ...
Kirst Nature Cannot Opin on in systems Biology 2017

A new approach to derivation of mean field theory Wilhelm Stannat
arXiv:1701.07128

W.S. Stocha

proof of uniform distribution and mixing property for $W \geq 0$

- Need to show that system acts bijectively on $\mathbb{I}^{\mathbb{N}} \setminus \Lambda^{\mathbb{N}}$.
- characterize invariant sets $\Rightarrow$ only $\emptyset$ and $\mathbb{I} \setminus \Lambda$

<u>Strategy:</u>

- Calculate action of T in each R_{av} corresponding to the avalanche pattern av

$av = (\varphi_i)_{i \in 1 \dots \infty}$

$$acb(av, i, j) = \sum_{k=1}^{j-1} \sum_{l \in \varphi_k} w_{il} \qquad 1 - \sum_{k=1}^{j-1} \sum_{l \in \varphi_k} w_{il} + \sum_{j \in \uplus \varphi_i} w_{ij} \overset{+ovl}{\geq}$$

$$R_{av} = [1 - acb(av, 1), 1) \otimes [1 - acb(av, k, j), 1 - acb(av, k, j-1))_{k \in \varphi_j} \otimes \left([0, 1 - acb(av, l, \infty))_{l \in \mathbb{N} \setminus \uplus \varphi_i} \setminus \bigsqcup_{i}^{\mathbb{N} \setminus \uplus \varphi_i} (w, 1 - acb(av, l, \infty)) \right)$$

- different R_{av} s are disjoint!
- Compute $T(av_1, R_{av})$ and see that these images are still disjoint

$$T(av_1, R_{av}) = \left[\sum_{j \in \uplus \varphi_i} w_{ij}, \sum_{j \in \uplus \varphi_i} w_{ij} + \Delta U \right]_{i \in \varphi_1} \otimes \left[\sum_{\substack{n \in \uplus \varphi_j \\ 0 = j \dots \infty}} w_{mn}, \sum_{\substack{n \in \uplus \varphi_j \\ 0 = j \dots \infty}} w_{mn} \right)_{m \in \varphi_j} \times \left(\left[\sum_{\substack{n \in \uplus \varphi_i \\ i = 1 \dots \infty}} w_{mn}, 1 \right]_{m \in \mathbb{N} \setminus \uplus \varphi_i} \setminus \left(\bigsqcup_{i}^{\mathbb{N} \setminus \uplus \varphi_i} (w, 1 - acb(av, l, \infty)) \right) + \left(\sum_{l \in \uplus \varphi_j} w_{kl} \right)_{k \in \mathbb{N} \setminus \uplus \varphi_i} \right)$$

$\hookrightarrow$ T acts as a shift $\left(\sum_{l \in \uplus \varphi_i} w_{kl} + \delta^{j \in \varphi_1}_{\Delta h} \right)_{l \in \mathbb{N}}$

<u>e.g.:</u> $T(av_1, R_{av}) \cap T(av^2_1, R_{av^2}) = \emptyset$ if $av_1 \neq av^2$ $\longrightarrow$ <u>also:</u> $i \in \uplus_k \varphi^1_k \wedge i \notin \uplus_k \varphi^2_k$

1. Wenn $|av| \neq |av^2|$

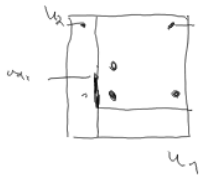

Sei da vorsichtig kein Überraschen!

$W = \begin{pmatrix} w_{11} & 0 \\ w_{21} & 0 \end{pmatrix}$

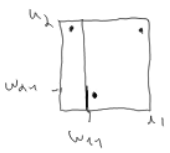

In die i-te Komponente von $T(\varphi^1_1, av_1)$, ist im Bereich:

$$\left[\sum_{n \in \uplus_{k=j}^{\infty} \varphi^1_k} w_{in}, \sum_{n \in \uplus_{k=j-1}^{\infty} \varphi^1_k} w_{in} \right]$$

Die i-te Komponente von $T(\varphi^2_1, av^2)$ ist im Bereich:

$$\left[\sum_{n \in \uplus_{k=1}^{\infty} \varphi^2_k} w_{in}, 1 \right] \setminus \left[\bigsqcup_{i}^{\mathbb{N} \setminus \uplus \varphi^2_k} (w, 1 - acb) + \sum_{n \in \uplus_{k=1}^{\infty} \varphi^2_k} w_{in} \right.$$

$$\left[w_{ii} + \Sigma, w_{ii} + \Sigma \right] \geq \left[\sum_{n \in \uplus_{k=1}^{\infty} \varphi^2_k} w_{in} + w_{ii}, 1 \right]$$

Wie kommt es zum Übergang zur Supercriticality?

<u>Überlebendes Kriterium:</u> $\exists$ subnet s st $(w_{ss} \cdot 1)_i > 1$ for some i $\in$ s

What is the probability of this to occur in dependence of N_c, N_e?

N_c iid subnetworks of N_s units

~~Easy:~~ Chance of N_s always possible ....

$$\frac{\left(1 - \frac{1}{\sqrt{N_s}}\right)}{N_s}$$

Need:

$$n \cdot \frac{\left(1 - \frac{1}{\sqrt{N_s}}\right)}{N_s} > 1$$

$$n > \frac{N_s}{1 - \frac{1}{\sqrt{N_s}}}$$

Mit 2 Subnetzwerken

Entweder 1 unit with $2N-1$ connections
2 units with $2N-2$ connections
⋮

3 Subnetzwerken

1 unit with all 3 subnetworks

1 units nur zu zwei subnetworks

1 unit with $3N-2$
2 units with $3N-4$
3 units with $3N-6$

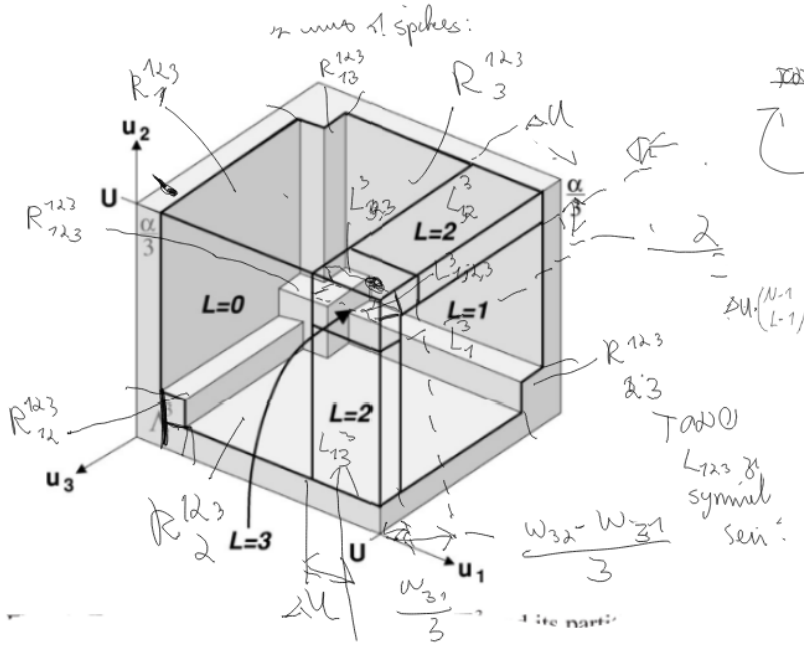

Ist ein nicht wirklich einfach ...

TODO: Vielleicht kann diese geometrische Interpretation auf die Allgemeine Situation übertragen werden.

Fläche in der Form mit den L-1 ausgegen. Spaltand entlang der spaltenden dimensionen kann durch $L^{L-2}\left(\frac{\alpha}{N}\right)^{L-1}$ Kästchen abdecken

$$\Delta u \cdot \binom{N-1}{L-1}\left(\frac{\alpha}{N}\right)^{L-1} L^{(L-2)} \left(1-L\frac{\alpha}{N}\right)^{N-L-1} \times \left(1-N\frac{\alpha}{N}\right)$$

$$\Delta u \cdot \left(1-\frac{\alpha}{N}\right)\left(1-3\frac{\alpha}{N}\right)$$

TODO L_{123} ist symmetrisch sein.

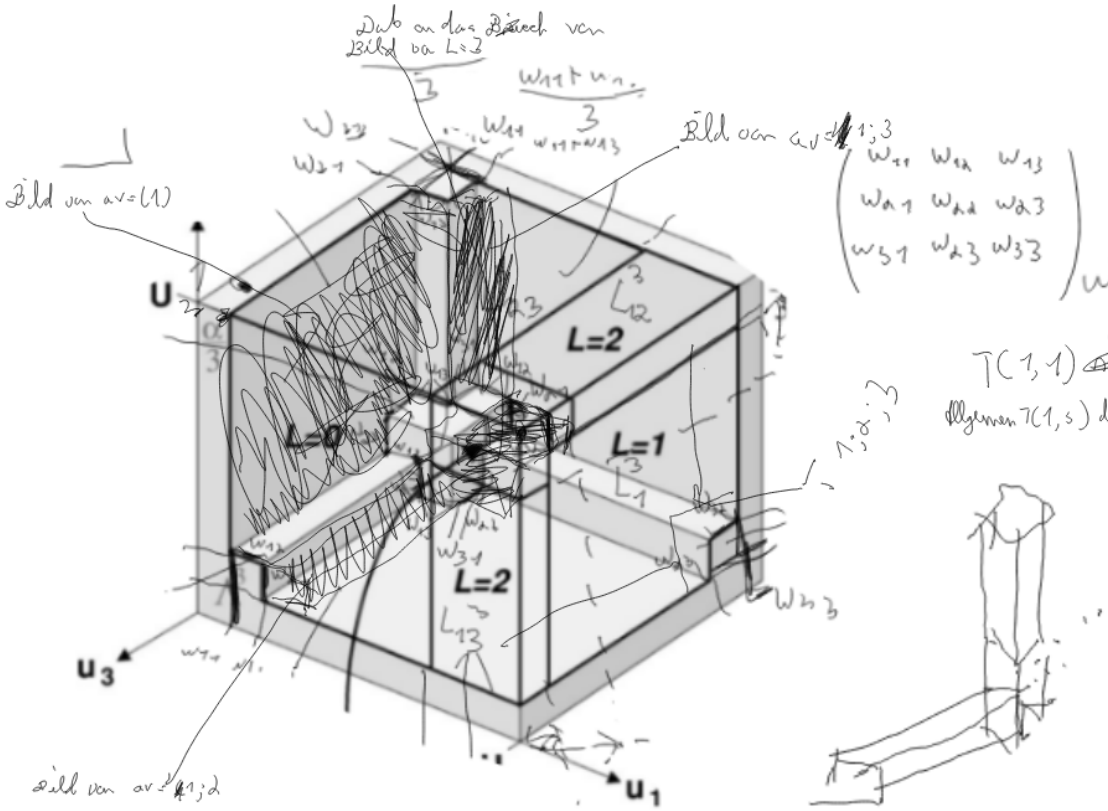

$$\begin{pmatrix} w_{11} & w_{12} & w_{13} \\ w_{21} & w_{22} & w_{23} \\ w_{31} & w_{32} & w_{33} \end{pmatrix} \text{Was}$$

$T(1,1)$ disjunkt von 1, da erste Komponente

Allgemein $T(1,s)$ disjunkt von $T(s')$ $s' \leq s$

Bilder von 1;2 und 1;3 sind separiert durch Λ_{23}

3 Seitenl ...

<u>Theorem:</u> Images $T(av_1^2, av)$ $\cap$ $T(av_1^3, av^2)$ are disjoint

<u>Proof:</u> For given av_1, the action of T shifts all regions periodically on their individual region by the vector $(w_{ij})_{i=av_1,\, j\neq i}$

$T(av_1, s_n)$ disjunkt von $T(s')$, da für $m \in s' \setminus s_n$ gilt, dass

$$T(a_{v_1}, R_{av}) = \Big[\sum_{j\in\Psi g_i} w_{ij},\ \sum_{j\in\Psi g_i} w_{ij} + \Delta U\Big]_{i\in g_1} \otimes \Big[\sum_{\substack{n\in\Psi g_j\\ 0=j\dots\infty}} w_{mn},\ \sum_{\substack{n\in\Psi g_j\\ 0=j\dots\infty}} w_{mn}\Big)_{m\in g_j} \times \Big(\Big[\sum_{\substack{n\in\Psi g_i\\ i=1\dots\infty}} w_{mn},\ 1\Big]_{m\in N\setminus\Psi g_i} \setminus \Big(\Lambda^{N\setminus\Psi g_i}(w, 1-\mathrm{acb}(a_v, l, \infty)) + \Big(\sum_{l\in\Psi g_j} w_{kl}\Big)_{k\in N\setminus\Psi g_i}\Big)$$

↳ T acts as a shift $\Big(\sum_{l\in\Psi g_i} w_{kl} + \delta^{j\in g_1}_{k} \Delta U\Big)_{k\in N}$ $j=2\dots\infty$

Zeige das alle disjunkt sind geordnet nach Länge von a_v

$$T(1,1) = [w_{11}, w_{11}+\Delta U]_1 \times [w_{i1}, 1] \setminus \Big(\Lambda^{N\setminus 1}(w, 1-w_{i1}) + w_{i1}\Big)_{i\in N\setminus 1}$$

$$T(1,1;j) = [w_{11}+w_{1j}, w_{11}+w_{1j}+\Delta U]_1 \times [w_{jj}, w_{1j}+w_{jj})_j \times [w_{i1}+w_{ij}, 1] \setminus \Big(\Lambda^{N\setminus 1j}(w, 1-w_{i1}-w_{ij}) + w_{i1}+w_{ij}\Big)_{i\in N\setminus 1j}$$

sind disjunkt da mindestens j-Koordinate bei $T(1,1)$ $w_{j1}+w_{jj}$ beträgt während alle j-Koordinaten in $T(1,1;j)$ $< w_{j1}+w_{jj}$!

Für unterschiedliche j sind $T(1,1;j_0)$ $T(1,1;j_2)$ disjunkt, da

maximale j_1 Komponente von $T(1,1;j_1)$: $< w_{j_1 j_1} + w_{j_1 1}$

minimale j_1 Komponente von $T(1,1;j_2)$: $w_{j_1 1} + w_{j_1 j_2} + w_{j_1 j_1}$

$$T(1,1;k,l) = \Big[\sum_{i\in\{1,k,l\}} w_{1i},\ \sum_{i\in\{1,k,l\}} w_{1i} + \Delta U\Big]_1 \times \Big[\sum_{i\in\{k,l,1\}} w_{ki},\ \sum_{i\in\{k,l,1\}} w_{ki}\Big]_k \times \Big[w_{kl},\ \sum_{i\in\{k,l\}} w_{ki}\Big] \times \Big(\Big[\sum_{i\in\{1,k,l\}} w_{i\cdot},\ 1\Big) \setminus \Big(\Lambda^{N\setminus kl}\Big(w, 1-\sum_{i\in\{1,k,l\}} w_{i\cdot}\Big) + \sum_{i\in\{1,k,l\}} w_{i\cdot}\Big)\Big)$$

$$\emptyset\ T(1,1;l,k) = \Big[\sum_{i\in\{1,k,l\}} w_{1i},\ \sum_{i\in\{1,k,l\}} w_{1i} + \Delta U\Big]_1 \times \Big[\sum_{i\in\{k,l,1\}} w_{li},\ \sum_{i\in\{k,l,1\}} w_{li}\Big]_l \times \Big[w_{lk},\ \sum_{i\in\{k,l\}} w_{li}\Big] \times \Big(\Big[\sum_{i\in\{1,k,l\}} w_{i\cdot},\ 1\Big) \setminus \Big(\Lambda^{N\setminus kl}\Big(w, 1-\sum_{i\in\{1,k,l\}} w_{i\cdot}\Big) + \sum_{i\in\{1,k,l\}} w_{i\cdot}\Big)\Big)$$

$$\emptyset\ T(1;l,k) = \Big[\sum_{i\in\{1,k,l\}} w_{1i},\ \sum_{i\in\{1,k,l\}} w_{1i} + \Delta U\Big]_1 \times \Big[\sum_{i\in\{k,l,1\}} w_{li},\ \sum_{i\in\{k,l,1\}} w_{li}\Big]_l \times \Big[\sum_{i\in\{k,l,1\}} w_{li},\ \sum_{i\in\{k,l,1\}} w_{li}\Big]_l \times \Big(\Big[\sum_{i\in\{1,k,l\}} w_{i\cdot},\ 1\Big) \setminus \Big(\Lambda^{N\setminus kl}\Big(w, 1-\sum_{i\in\{1,k,l\}} w_{i\cdot}\Big) + \sum_{i\in\{1,k,l\}} w_{i\cdot}\Big)\Big)$$

sind disjunkt von $T(1,1)$ da die k,l Komponente in $T(w, \{k,l\})$ (geschiftet) enthalten sind, welche sich im Komplement von $T(1,1)$ befindet !

Das Paar der gepfeilten Koordinaten entlang k,l ist

$\Big(\sum_{i\in\{k,l,1\}} w_{ki},\ \sum_{i\in\{k,l,1\}} w_{li}\Big)$ This is element of $\Lambda(w, \{k,l\}) + \sum_{i\in\{k,l\}} w_{i\cdot}$

Warum sind $T(1,1;j)$ und $T(1,1;\{k,l\})$ disjunkt?

oBdA sei $k \neq j$

dann max. Koordinate von k bei $T(1,1;\{k,l\})$ ist $\sum_{i\in\{1,k,l\}} w_{ki}$

die min. Koordinate von k bei $T(1;j)$ ist $w_{1k} + w_{kk} + w_{lk}$

Warum sind $T(1,1;k;l)$ und $T(1;1;m;n)$ disjunkt?

oBdA sei $l \neq m$

↳ max Koordinate in Γ_l ist kleiner als min. l-Koordinate in Γ_m

Ok, jetzt der generelle Schritt: ← und dann massenarbeit gestellt

$T(1, s_n)$ ← unser ofall mögs with nerves s_n spacing

$|S_n| = n$

$T(1, s_n) \cap T(1, s_j) = \emptyset \quad \forall s_j \quad j < n$

Let the set $M := S_n \setminus S_j$ $|m| = n-j$ be the sets of units in n not occuring in s_j

$\forall x \in T(1, s_n)$ $x_m < \Big(\sum_{i\in s_n} w_{ji}\Big)_{j\in m}$ componentwise

Let

$\forall x_q \in T(1, s_j)$ $x_m \in \Big[\sum_{n\in s_j} w_{mn}, 1\Big]_{m\in N\setminus S_j} \setminus \Big(\Lambda^{N\setminus S_j}\Big(w, 1-\sum_{n\in S_j} w_{mn}\Big) + \sum_{n\in S_j} w_{mn}\Big)_{m\in N\setminus S_j}$

$\cup\!\!\mid$

$\Gamma^{N\setminus S_j}(w, M)$

$\Big(\sum_{i\in s_j} w_{ji} + \sum_{i\in M} w_{ji}\Big)_{j\in M}\Big|_M \in X_{|m}$

so $T(1, s_n) \cap T(1, s_j) = \emptyset$

$T(1, s_n^1) \cap T(1, s_n^2)$

Sei $j \in s_n^1$ und $j \notin s_n^2$

dann ist $x_j < \sum_{i\in s_n^1} w_{ji}$ $\forall x \in T(1, s_n^1)$

aber $x_j \geq \sum_{i\in s_n^2} w_{ji} + w_{jj}$ $\forall x \in T(1, s_n^2)$

$\cup\!\!\mid$

$\Gamma^{N\setminus s_n^2}(w, \{j\})$

somit sind $T(1, s_n^1) \cap T(1, s_n^2) = \emptyset$

Mathematische Aufschrift:

$$T(a,u) = F^{k(a,u)} \circ \varphi_{a_1}(u)$$

$$\varphi_i(u) = u + e_i \Delta U$$

$$A(x) = (\mathbb{1}[x_i \geq 1])_{i=1..N}$$

$$F(x) = x + W \cdot A(x) - A(x)$$

$$k(a,u) = \min_{i \geq 0} A(F^i \circ \varphi_{a_1}(u)) = 0$$

$$av(a_1,u) = (\varphi_i)_{i=0..k(a,u)-1} \quad \varphi_i := \{ j \mid A_j(F^i \circ \varphi_{a_1}(u)) = 1 \}$$

Theorem $k(a,u) \leq N$ für $W \cdot \mathbb{1}$
and each unit i can fire at most once!
$\sum_{j=1}^{k(a,u)} A(F^j \circ \varphi_{a_i}(u))_i \leq 1 \quad \forall \; a, u$

Theorem: $\tilde{\Lambda}(W, u=1)$ can not be entered and density of states will eventually vanish
Sei $\varphi_a(u)_k \geq 1 \Rightarrow T(k..,u) \notin \Lambda$ $\square$ #1

Dann genaue Beschreibung von Λ, bedeutung ~~e~~ nichtrekursiver Formel des Volumens

Dann genaue Klassifizierung der Regionen die zu Lawinen ~~tatsächlich~~ führen, und ihre Bilder.
Zeige, dass Bilder disjunkt sind #2

Durch die Disjunktheit der Bilder hat jedes Element ~~einen~~ eindeutiges Urbild

- Bemerkung über oder vollständiger Beweis der topologischen Transitivität
- Konstruktion des Wahrscheinlichkeitsraumes
- Herleitung der Lawinenstatistik für einfache Spezialfälle
-

Dann kommt der Neuroscience Teil mit den 2-AFC Simulationen

$$T(av_1, Rav) = \Big[\sum_{j \in \Psi\varphi_i} w_{ij},\ \sum_{j \in \Psi\varphi_i} w_{ij} + \Delta U\Big]_{i \in \varphi_1} \bigotimes_{j=2..\infty} \Big[\sum_{n \in \Psi\varphi_j} w_{mn},\ \sum_{n \in \Psi\varphi_j} w_{mn}\Big]_{m \in \varphi_j} \times \Big(\Big[\sum_{n \in \Psi\varphi_i} w_{mn},\ 1\Big]_{m \in N \setminus \Psi\varphi_i} \setminus \Big(\tilde{\Lambda}^{N \setminus \Psi\varphi_i}(W, 1 - acb(av, l, \infty)) + \Big(\sum_{l \in \Psi\varphi_j} w_{kl}\Big)_{k \in N \setminus \Psi\varphi_i}\Big)$$

↳ T acts as a shift $\Big(\sum_{l \in \Psi\varphi_i} w_{kl} + \delta^{i \in \varphi_1}_{\Delta U}\Big)_{l \in N}$

(*1)

Sei $\varphi_{a_1}(u) = 1$ and $av(a_1, u) = (\varphi_i)_{i \in 1 \dots D}$

<u>Then</u>: $T(a_1 \dots, u) \notin \Gamma^{\sim}(W, u, I) = [0, \sum_{j \in I} w_{ij})_{i \in I} \times [0, U_i)_{i \in N \setminus I}$

<u>Proof:</u> Collecting all summands in $F^{D-1} \circ \varphi_{a_1}(u)$ we have

$$F^{D-1} \circ \varphi_{a_1}(u) = \varphi_{a_1}(u) + W \cdot \sum_{i=1}^{D-1} A(F^i \circ \varphi_{a_1}(u)) - \sum A(F^i \circ \varphi_{a_1}(u))$$

$$= \varphi_{a_1}(u) + W \cdot \mathbb{1}[s \in \Psi \varphi_i] - \mathbb{1}[s \in \Psi \varphi_i]$$

In Particular,

$$F^{D-1} \circ \varphi_{a_1}(u) \big|_{\Psi \varphi_i} = W \cdot \mathbb{1}[s \in \Psi \varphi_i] \Rightarrow T(a_1 \dots, u) \notin \Gamma^{\sim}(W, u, I) \quad \blacksquare$$

$\boxed{*2}$

$av = (\varphi_i)_{i \in 1 \dots D}$

$acb(av, i, j) = \sum_{k=1}^{j-1} \sum_{l \in \varphi_k} w_{ilk}$ $\qquad 1 - \sum_{k=1}^{j-1} \sum_{l \in \varphi_k} w_{ilk} + \sum_{j \in \Psi \varphi_i} w_{ij} \overset{\text{FOVR}}{\geq}$

$R_{av} = [1 - \Delta u, 1) \otimes [1 - acb(av, k, j), 1 - acb(av, k, j-1))_{k \in \varphi_j} \otimes \left([0, 1 - acb(av, l, D))_{l \in N \setminus \Psi \varphi_i} \cap_{i}^{N \setminus \Psi \varphi_i} (W, 1 - acb(av, l, D)) \right)$

Theorem

$$R_{(\varphi_i)_{i \in 1 \dots D}} = \{ u \mid av(\varphi_1, u) = (\varphi_i)_{i \in 1 \dots D} \}$$

The proof proceeds by observing the positions of the images $F^{i-1} \circ \varphi_{a_1}(u)$ at each step i of the avalanche and computing the conditions that $A(F^{i-1} \circ \varphi_{a_1}(u)) = \varphi_i$

The condition for the first step of the avalanche to be $\varphi_1 = \{i\}$ (all choices not possible since $\|A(\varphi_a(u))\|_\infty \leq 1$) is that $u_i \in [1 - \Delta u, 1)$

During step j of the avalanche, ...

Simplifying Notation for R_{av} and $T(av, R_{av})$

$U(av, \text{start}, \text{end})$

Stetigkeit = Zusammenhang

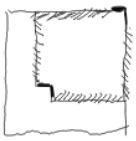

Korrespondenz zum original ETAC-Modell

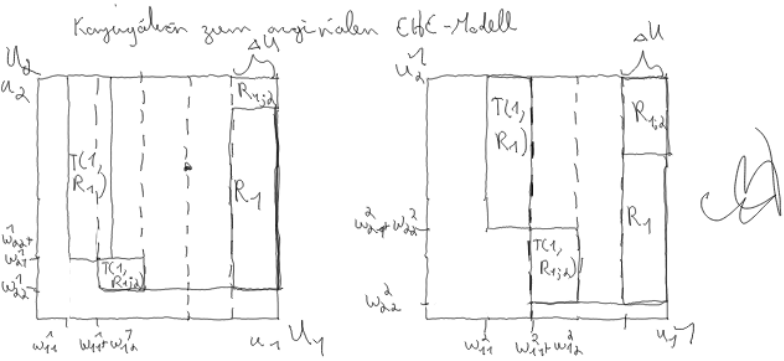

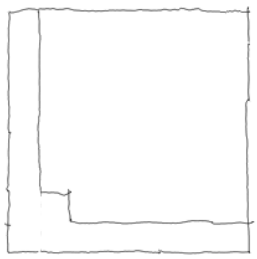

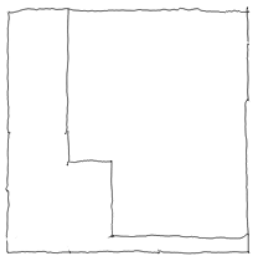

Original CHE Model

$\mathrm{Vol}(\Lambda^H(w,u)) = \frac{|H|}{N}\alpha \cdot \left(1-\frac{N-|H|}{N}\alpha\right)^{|H|-1}$

$\left(1-\frac{1}{N}\right)$

$\left(1-\frac{N-L}{N}\alpha\right) = \left(1-\alpha+\frac{L}{N}\alpha\right)$

$\mathrm{Vol}(R_{av})$ with $av = (n_i)_{i=1\dots D}$ $\sum_{i=1}^{D} n_i = L$ $n_i = |q_i|$

$$\Delta u \cdot \prod_{i=2}^{D}\left(n_{i-1}\frac{\alpha}{N}\right)^{n_i} \cdot \left[\left(1-\frac{L}{N}\alpha\right)^{N-L} - \frac{N-L}{N}\alpha\left(1-\frac{L}{N}\alpha\right)^{N-L-1}\right]$$

$(1-\frac{L\alpha}{N} - \frac{(N-L)\alpha}{N})$

$$= \Delta u \frac{\alpha}{N}^{L}\left(\prod_{i=2}^{D} n_{i-1}^{n_i}\right)\cdot\left[\left(1-L\frac{\alpha}{N}\right)^{N-L-1}\left(1-(L+N-L)\frac{\alpha}{N}\right)\right]$$

$$\Delta u \frac{\alpha}{N}^{L}\left(\prod_{i=2}^{D} n_{i-1}^{n_i}\right)\cdot\left[1-L\frac{\alpha}{N}\right)^{N-L-1}(1-\alpha)$$

$$\boxed{\text{Proposition: } \sum_{\substack{av\in\Omega \\ \mathrm{sig}(av)=n}} \prod_{i=2}^{\mathrm{dim}(av)} n_{i-1}(av)^{n_i(av)} = n^{n-1}}$$

Incrementing last bin gives factor of

$\frac{L}{n\alpha}$

adding a one reverses by factor

L

Now

$$P(\mathrm{sig}(av)=n) \propto \sum_{\substack{av\in\Omega \\ \mathrm{sig}(av)=n}} \mathrm{Vol}(R_{av}) = f(n)\cdot\Delta u\cdot\left(\frac{\alpha}{N}\right)^{L}\cdot\left[1-L\frac{\alpha}{N}\right)^{N-L-1}(1-\alpha)$$

Jedes av^1- und av^2 mit $n_i^1 = n_i^2$ $\forall i$ hat gleiches Gewicht!

Vorfaktoren:

$n=1$: $\binom{N}{1}\cdot(1)$

$n=2$: $(1,1)$ $N\cdot(N-1) = 2\binom{N}{2}$ $\quad 2\cdot 2^0$

$n=3$: $(1,2)$ $\binom{N}{1}\cdot\binom{N-1}{2} = 3\cdot\binom{N}{3}$

$(1,1,1)$ $\binom{N}{1}\binom{N-1}{1}\binom{N-2}{1} = 6\cdot\binom{N}{3}$ $\quad > f(3) = 9 = 3\cdot 3^1$

$\binom{N-1}{L-1} L^{L-2}$

$n=4$: $(1,3)$ $\binom{N}{1}\binom{N-1}{3} = 4\cdot\binom{N}{4}$

$(1,4)$ $\binom{N}{1}\binom{N-1}{4} = 5\binom{N}{5} = L\binom{N}{L}$

$(1,3,1)$ $\binom{N}{1}\binom{N-1}{3}\binom{N-4}{1} = 20\binom{N}{5} = L(L-1)\binom{N}{L}$

$(1,2,2)$, $(1,2,1,1)$ $\binom{N}{1}\binom{N-1}{2}\binom{N-3}{2} = 30\binom{N}{5} = \frac{L!}{2!2!}\binom{N}{L}$

$(1,1,2,1)$ $\quad 2^{N-1}\cdot 1$

$(1,1,1,2)$ $\quad + 2^{N-2}\cdot 2$

$(1,1,1,1,1)$ $\quad 2^{N-3}\cdot 3$

$\vdots$

$2^0\cdot(N-1)$

$(1,2,1)$ $\binom{N}{1}\binom{N-1}{2}\binom{N-3}{1} = 12\cdot\binom{N}{4}$

$(1,1,2)$ $\binom{N}{1}\binom{N-1}{1}\binom{N-2}{2} = 12\binom{N}{4}$ $\quad > f(4) = 52 = 4\cdot 4^3$

$(1,1,1,1)$ $\binom{N}{1}\binom{N-1}{1}\binom{N-2}{1}\binom{N-3}{1} = 24\binom{N}{4}$

$N=3$: $6\binom{N}{L}\cdot\left(\frac{1}{2}+\frac{1}{3}\right)$

Factor for $(n_i) = \frac{L!}{\prod n_i!}\binom{N}{L}$

$N\cdot\binom{N-1}{L-1}\left(\frac{\alpha}{N}\right)^{L-1} L^{(L-2)}\left(1-L\frac{\alpha}{N}\right)^{N-L-1}\times\left(1-N\frac{\alpha}{N}\right)$

roll: $n=1$

$f(1) = 1\cdot\binom{N}{1}$

$f(2) = 2\cdot\binom{N}{2}$

$L^{L-2}\binom{N}{L} = N\binom{N-1}{L-1}\cdot L^{L-2}$

$f(3) = N\cdot(N-1)(N-2)\,1^1\cdot 1^1 + N\cdot\binom{N-1}{2}\cdot 1^3 = 9\binom{N}{3}$

Now. From $n-1$ to n we get all partitions by:

Incrementing last entry of p_{n-1}

adding a 1^0 to the end

$(L+1)^L - (L+1)L^{L-1}$

$= \sum_{i=1}^{L}\binom{L}{i}L^i - L^L - L^{L-1}$

$= \sum_{i=1}^{L-1}\binom{L}{i}L^i - L^{L-1}$

$= \sum_{i=1}^{L-2}\binom{L}{i}L^i + (L-1)L^{L-1}$

$1-\alpha-\Delta u + \Delta u\frac{N+1}{N}\alpha + \alpha\Delta u - \alpha\Delta u\frac{N+1}{N}\alpha$

$1-\alpha-\Delta u\left(1-\frac{N+1}{N}\alpha\right) + \alpha\Delta u\left(1-\frac{N+1}{N}\alpha\right)$

$(1-\alpha)\left(1-\Delta u\left(1-\frac{N+1}{N}\alpha\right)\right)$

$$\boxed{\text{Proposition: } \sum_{\substack{av\in\Omega \\ \mathrm{sig}(av)=n}} \prod_{i=2}^{\mathrm{dim}(av)} n_{i-1}(av)^{n_i(av)} = n^{n-1}}$$

$$\tilde{V}(L,N,\alpha) = \begin{cases} U^{N-1}(1-\alpha)\left[U-\Delta U\left(1-\alpha-\frac{\alpha}{N}\right)\right], & L=0 \\ \frac{\Delta U}{L}U^{N-1}\binom{N-1}{L-1}\left(\frac{L\alpha}{N}\right)^{L-1}\left(1-\frac{L\alpha}{N}\right)^{N-L-1}(1-\alpha), & L>0. \end{cases}$$

Dann gilt

$P(\mathrm{sig}(av)=n) \propto \Delta u\left(\frac{\alpha}{N}\right)^{n}\binom{N}{n}n^{n-1}\left[1-L\frac{\alpha}{N}\right)^{N-L-1}(1-\alpha)$

$R_{ij} = ?$

Nach Lemma $\Lambda^N(w,1)\cap[0,1-\delta_i^{i^*}\Delta u]_{i\in N}$

aus Weg $i\ell$ $= \Lambda^N(w,(1-\delta_i^{i^*}\Delta u))$

Für $w=$ const

$= \frac{N-1}{N}\alpha\cdot(1-\Delta u) + \frac{\alpha}{N}$

$1-\Delta u - \frac{N-1}{N}\alpha(1-\Delta u) - \frac{\alpha}{N}$

$(1-\Delta u)\left(1-\alpha-\frac{\alpha}{N}\right) + \frac{\alpha}{N}$

$$f(L) = \sum_{a \vee L-1} f(a) = L \cdot \sum_{a \vee L-1} f(a) + \sum_{a \vee L-1} \frac{N}{a_L} \cdot f(a)$$

$$L \cdot \left((L-1)^{L-2} \cdot \quad \right) +$$

$$L^{L-1} - L \cdot (L-1)^{L-2}$$

$$L^{L-1} - (L-1+1)(L-1)^{L-2}$$

$$L^{L-1} - (L-1)^{L-1} - (L-1)^{L-2}$$

$$5^3 \quad \frac{5 \cdot 5 \cdot 5}{4 \cdot 4 \cdot 4}$$

$$4^3$$

$$\left(\frac{5}{4}\right)^3$$

von

$$P(\mathrm{sig}(av)=n) \propto \sum_{\substack{av\in\Omega \\ \mathrm{sig}(av)=n}} \mathrm{Vol}(R_{av}) = f(n)\cdot \Delta u \cdot \binom{N}{L} \cdot \left[1-L\frac{\alpha}{N}\right]^{N-L-1}(1-\alpha)$$

Jedes av^1-und av^2 mit $n_i^1 = n_i^2$ $\forall i$ hat gleiches Gewicht!

Vorfaktoren:

$n=1$: $\binom{N}{1}\cdot(1)$

$n=2$: $(1,1)$ $N\cdot(N-1) = 2\binom{N}{2}$

$n=3$: $(1,2)$ $\binom{N}{1}\cdot\binom{N-1}{2} = 3\cdot\binom{N}{3}$

$(1,1,1)$ $\binom{N}{1}\binom{N-1}{1}\binom{N-2}{1} = 6\cdot\binom{N}{3}$

$n=4$: $(1,3)$ $\binom{N}{1}\binom{N-1}{3} = 4\cdot\binom{N}{4}$

$(1,2,1)$ $\binom{N}{1}\binom{N-1}{2}\binom{N-3}{1} = 12\cdot\binom{N}{4}$

$(1,1,2)$ $\binom{N}{1}\binom{N-1}{1}\binom{N-2}{2} = 12\binom{N}{4}$

$(1,1,1,1)$ $\binom{N}{1}\binom{N-1}{1}\binom{N-2}{1}\binom{N-3}{1} = 24\binom{N}{4}$

Faktor für $(n_i) = \frac{L!}{\prod n_i!}\binom{N}{L}$

$n=3$

$$\sum_{a\in av_3} R(a) = 3\cdot R(1,1) + \frac{3}{2}R(1,1)$$

$$R(1,1)\left(3+\frac{3}{2}\right)$$

roll

Structured overlap networks

$$w_{ij} = \begin{cases} 1 \text{ if } i \in S_1, j \in S_1 \\ \quad i \in S_2, j \in S_2 \\ 0 \text{ otw.} \end{cases}$$

$$(1-\alpha) - (1-\Delta u) + \frac{N-1}{N}\alpha(1-\Delta u) + \frac{\alpha}{N}$$

$$\{1-\alpha\} - \{1+\Delta u\} + \alpha - \frac{N-1}{N}\alpha\,\Delta u$$

$$\Delta u\left(1 - \frac{N-1}{N}\alpha\right)$$

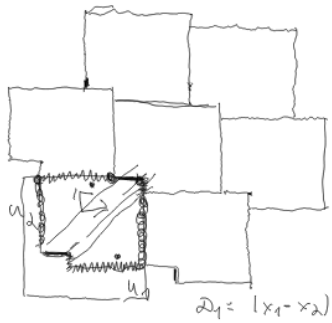

$d_1 = |x_1 - x_2|$ if $x_1 \in D \vee x_2 \in D$ sonst ∞

$d_2 = |T(x_1) - x_2|$ if

$\min\{d_1, d_2, d_3\}$

T ist Normerhaltend

$\min(|x-x'|, |Tx-x'|, |x-Tx'|)$

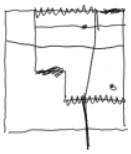

Norm for which T is <u>isometric</u>:

$$\|x-x'\|_T = \begin{cases} \|x-x'\|_2 & \text{if } x, x' \in [0, 1-\Delta u] \\ \min \text{ von der Seite} \begin{cases} \min\{\|T_i x - x'\\} & \text{if } x_i \text{ in } [1-\Delta u, \Delta] \text{ dh. } \Delta \\ -\min\{\|T_i x' - x\|\} & \text{if } x'_i \text{ in } [1-\Delta u, 1] \text{ dh. } \Delta \end{cases} \end{cases}$$

$i \in \mathbb{N}$

Vervollständigung des Beweises der top. transitivität

<u>Lemma 7.3.7:</u> For any $y, z \in \mathcal{D}$ and any $\varepsilon > 0$ there exists a finite sequence $b(y,z) = (b(y,z)_i)_{i=1}^{L(y,z)}$ such that for any $a \in A$ the Euclidean distance $p(z, \pi_x(T^L(b(y,z)a, y))) < \varepsilon$ and $L(y,z) \leq M(N, \varepsilon, \alpha, \delta)$, which does not depend on y, z

Proof of theorem 7.3.2

We have to show that for any open subsets of $\mathcal{D}$: $U, V \subseteq \mathcal{D}$ there exists an $n \in N$ such that $\pi_x(T^n(a, U)) \cap V \neq \emptyset$.

As it is proved in the Lemma 7.3.7 for any $y, z \in \mathcal{D}$ $\exists$ $b(y,z) = (b(y,z)_i)_{i=1}^{L(y,z)}$ such that for any $x \in N$ $|\pi_x(T^L(b(y,z), y))_k - z_k| < \varepsilon$ with $L(y,z) \leq M(N, \varepsilon, \delta, \alpha)$.

So we can find for all starting points $x \in U$ and start of $a_1^j = a_1 \dots a_j$ and endpoint $v \in Q$, $a = a_1^j \dots$ find at least one sequence $b(y_x^j, z)$ of length $L(y_x^j, z) \leq M(N, \varepsilon, \delta, \alpha)$ such that $T^{j+L(y_x^j, z)}(a_1^j b(y_x^j, z), x) \in Q_v^\varepsilon$, where $y_x^j = T^j(a_1^j, x)$.

It remains to be shown that uniformley for x, z the probability that at at least one step j a completing sequence $b(y_x^j, z)$ occurs in a is 1.

To be able to do this it is <u>not</u> sufficient to show this for any x since then one would have to form a noncountable intersection of sets with probability one which is not guaranteed to have probability one!

Therefore we make use of the fact that U, V are open sets and thus always have a diameter of at least $\frac{\varepsilon_1}{n}$ and $\frac{\varepsilon_2}{n}$. We introduce a sequence of grids g_n on $\mathcal{D}$ with points equally spaced points with distance $\frac{1}{n}$

It now suffices to show that for any two points x_g, z_g for any grid g $\exists$ $n \in N$ st $|T^n(a, x_g) - z_g| < \varepsilon$ since this is now a countable number of pairs x_g, z_g we compute the statement individually for each pair.

We prove this by showing that for any x, z the set of $a \in A$ such that $\forall n$ $|T^n(a,x) - z| > \varepsilon$ has measure zero with the uniform bern. shift measure. Since according to Lemma 7.3.7 at each step j in a there is (at least) one completing sequence $b(y_x^j, z)$ of length $\leq M$ we have

$$\underbrace{\{a \mid T^n(a,x) - z| > \varepsilon \ \forall n \in \mathbb{N}\}}_{C^\varepsilon} \subseteq \{a \mid b(y_x^j, z) \text{ is not prefix of } a_{j+1}^{j+M} \ \forall j \in \mathbb{N}\}$$

$$\subseteq \{a \mid b(y_x^{pM}, z) \text{ is not prefix of } a_{pM+1}^{(p+1)M} \ \forall p \in \mathbb{N}\} =: C_\infty^\varepsilon$$

$C_{n+1} \leq C_n$

Denote by C_n^ε the sets $\{a \mid b(y_x^{pM}, z) \text{ is not prefix of } a_{pM+1}^{(p+1)M} \ \forall 0 \leq p \leq n\}$

We have $C_\infty^\varepsilon = \bigcap_{n \in \mathbb{N}} C_n^\varepsilon$ and $\mathbb{P}(C_\infty^\varepsilon) = \lim_{n \to \infty} \mathbb{P}(C_n^\varepsilon)$ stabilizing von Korn

Now $\mathbb{P}(C_0^\varepsilon) \leq \frac{N^M - 1}{N^M}$ and $\mathbb{P}(\{w \in C_{n+1}^\varepsilon\}) \leq \mathbb{P}(w \in C_n^\varepsilon) \cdot \frac{N^M - 1}{N^M}$ since for all $w \in C_n$ there is at least one sequence like bla.

Taken together we thus have

$$\mathbb{P}(C^\varepsilon) \leq \mathbb{P}(C_\infty^\varepsilon) = \lim_{n \to \infty} \left(\frac{N^M - 1}{N^M}\right)^n = 0 \qquad \square.$$

Ergodicity Shift Prod

geg. Zylind. sets $\underbrace{m[x_1 \dots x_n]}_{A} \times U$ und $\underbrace{m'[x_0' \dots x_n']}_{B} \times V$

Zeige das $\mu \times \lambda(T^{-n}(A) \cap B) = 0$

1. Transformiere $m[x_1 \dots x_n]$ durch Verschieben m' n' Schritte in $m'[x_0' \dots x_n']$ egal was gemacht wird. Dann Transformiert hat von U zu V Richtung!

Präsentation der Simulationsergebnisse:

- Motivation aller getroffenen Investigationen
  ↳ Nachvollziehbar aller Schritten, ruhig ins Detail gehen
- Ergebnisse nicht nur hinschreiben, sondern verständnis entwickeln und Erkenntnisse stückhaftig vermitteln / mit Bildern zeigen

→ Durch Betrachtung der Bilder soll man die Hauptergebnisse Nachvollziehen können!

Wie sieht das konkret aus:

1. review arising of power laws in the EHE Model
   ↳ start by describing model dynamics
   ↳ short introduction to deriving avalanche size statistics → link to math chapter and ergodicity of the system
   ↳ real power laws arising in the limit $\alpha \to 1$ $N \to \infty$
   ↳ Numerically calculated finite size power law for $1-\frac{1}{N}$
   ↑ Evaluate with KS-Distance and bootstrap p-value with MC Independence sampler

2. Embedding critical subnetworks
   ↳ Need for inhibition → Not bounds anymore → explorations with dissipating boundary outlook
   ↳ Simple example/explanation why 2 or more? partly overlapping networks lead to super-criticality
   ↳ ~~Maybe few raster plots ....~~
   ↳ Example 2 Overlap Networks !!!!! → analytical treatment as outlook
   ↳ [optional: Inhibition to the 2 Network model → just not in depth this is Nieyes part]

(1) Generalization of weight matrix
   → Explain formation of coupling matrix
   ↳ example images of embeddings
   ↳ What is the Capacity / Transition to supercriticality
   ! low dependence on activation support? Does it make a difference which the whole network or just a subnetwork gets activated?
   ↳ Too tech would probably be activate everything / Another test: activate all Region elements!
   → Phase space pictures
   ↳ preliminary explanations for phase space transition
   ↳ Influence of embedding parameters α_{inh}, β ??

(2) Generalization of Input Support → show phase space plots of interesting statistical properties of the embedding (# exp. begin per unit, pairwise overlap, number of begins receiving excitation from one unit on average)

3. Simulating a 2-AFC Task
   - Explain rationale → connections with 2-AFC contain integration banks
   - Describe different supports given to the external input
   - simulation performed over 10 realizations of ensembles a 10 hours of activated scheduled
   - RESULTS of 2-AFC Task
     - Inalienable discriminability between Target and Distractor
       ↳ Questions: • Why does the Target always display activity even though it is depressed by the firing background units?
       ↳ Explanation with spike raster plots sorted figure / background
       • Dependance on α_{inh} and β_{exc}?
       • KS-Distance accumulation of Power laws?
       ↳ Phase space images of KS-distances → shows how superior it always !!!! rule!
       • Variance between different activations and realizations !!!!!
     - Classification performance of distinct coincidence detector
     - indicate why? Discuss neurophysiologic & realizability → robustness against noise
     - Introduce coincidence detector
     - show to calculate accuracy → Discuss why and how of background contrast.
     - Discuss results: From population activity
       to threshold distribution
       to accuracy in dependence of s_0, T → ∃ optimal s_0 why not lower values? What is relation of T to noise
       to more accuracy of phase plots → why better on transition region → Discuss variance accross realizations
   Dependence of α_{inh}, β, robustness against K

- Erweiterungen des 2-AFC Tasks:
  - Activation of Part of a Figure
  - Other extensions as outlook

So, diese Liste wird jetzt von oben nach unten abgearbeitet !!!