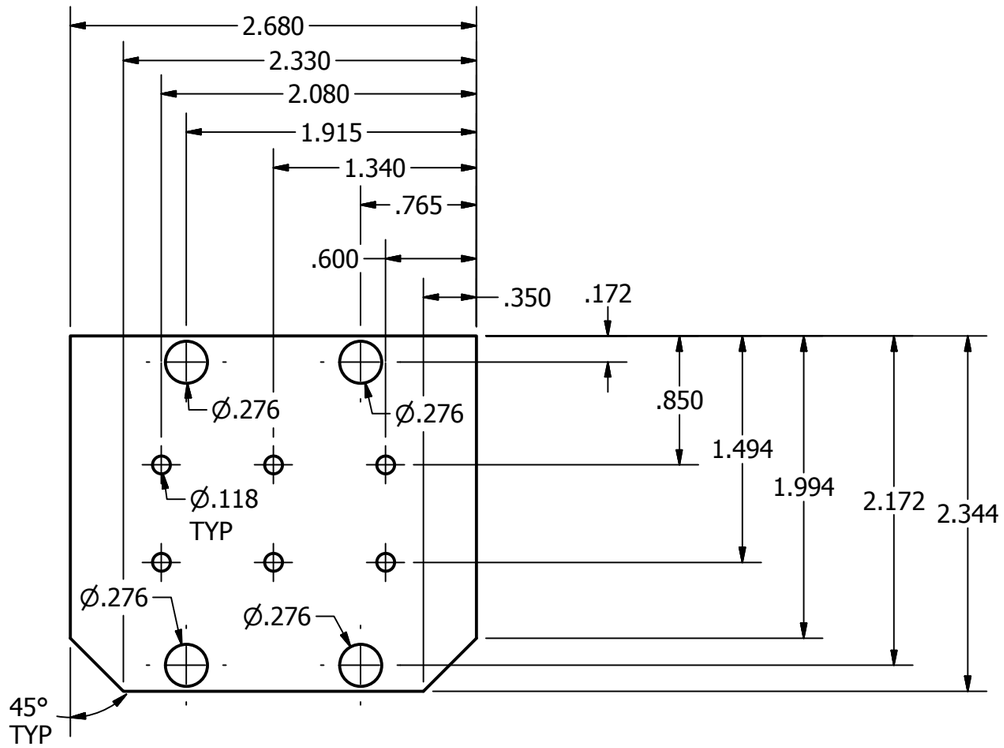

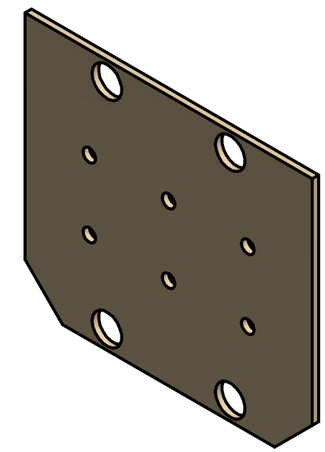

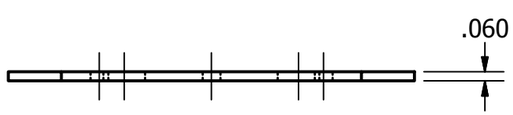

DRAWN S S Lawson	6/8/2018	UMBC Dusty Plasma Lab
CHECKED		TITLE
QA		VIPE Insulation Bottom
MFG		
APPROVED		
		SIZE B / DWG NO 030 / REV A
		SCALE 1 : 1 / SHEET 1 OF 1