ARM® Cortex®-M

32-位微控制器

NuMotor系列
程式使用手冊

The information described in this document is the exclusive intellectual property of Nuvoton Technology Corporation and shall not be reproduced without permission from Nuvoton.

Nuvoton is providing this document only for reference purposes of NuMicro® microcontroller based system design. Nuvoton assumes no responsibility for errors or omissions.

All data and specifications are subject to change without notice.

For additional information or questions, please contact: Nuvoton Technology Corporation.

www.nuvoton.com

NU-LB-NM1817 USER MANUAL

目錄

1. 簡介 3
2. 控制方法 3
2.1. 控制方法切換 3
3. 馬達參數設定 4
4. 電流回授線路參數 5
5. PI控制器參數 6
6. HALL sensor訊號量測說明 7
6.1. 相電壓量測說明 7
6.2. Hall sensor訊號及相電壓對應圖 7
7. 電流回授說明 9
7.1. 驅動器線路 9
7.2. 電流回授線路 9

1. 簡介

此使用手冊說明NuMotor example code使用方法，主要目的為讓使用者利用此範例程式使馬達運轉，說明不同控制模式之切換方法，需更動之參數說明，及外部回授線路說明

2. 控制方法

此範例程式包含以下控制方法

I. FOC 1R : 磁場導向控制，使用 1 個 shunt 電阻回授總電流
II. FOC 2R : 磁場導向控制，使用 2 個 shunt 電阻回授兩相電流
III. Six step square wave control(open loop) : 六步方波控制，開迴路控制(調整 duty 命令)
IV. Six step square wave control(close loop) : 六步方波控制，閉迴路控制(調整速度命令)

2.1. 控制方法切換

範例程式將控制方法以#define的方式區分，修改system_parameter.h裡的代碼即可切換不同控制方法，修改範例如下

I. FOC & SIX_STEP control 切換 : 將對應的控制方法 define 為 1，則可開啟對應功能，0 則為關閉(二擇一)

```
#define    P_FOC_CONTROL        1    // 1 : for P_FOC_CONTROL
#define    P_SIX_STEP_CONTROL   0    // 1 : for P_SIX_STEP_CONTROL
```

II. SIX_STEP control OPEN_LOOP & CLOSE_LOOP 切換 : 1 為開，0 為關(二擇一)

```
#define P_SIX_STEP_OPEN_LOOP    1
#define P_SIX_STEP_CLOSE_LOOP   0
```

III. FOC control 1R & 2R 切換 : 取消欲開啟之功能的註解(//)，則開啟對應功能(二擇一)

```
#define    P_1R_FOC     //For the system is 1R FOC
//#define  P_2R_FOC     //For the system is 2R FOC
```

NU-LB-NM1817 USER MANUAL

3. **馬達參數設定**

更換不同馬達時，需依實際馬達極數更改以下參數，於system_parameter.h

I. 馬達極數

```
#define    C_MOTOR_POLE          4    //Unit: Number of motor pole
```

II. 最大轉速

```
#define    C_MAX_MOTOR_SPEED     3000    //Unit: rpm, maximum rotor speed.
```

III. 當轉速大於多少 rpm 時，計算平均轉速

```
#define    C_RPM_Do_Speed_Average    300    //Unit: rpm, When rotor speed is over it --> Do speed average.
```

IV. 當使用外部 VR 下轉速命令時，須設定命令最大及最小值，最小值為馬達起轉轉速

```
#define    C_MAX_CMD_SPEED_rpm    3000    //Unit: rpm
#define    C_MIN_CMD_SPEED_rpm    200     //Unit: rpm
```

V. Hall sensor type : 分為 type 0 及 type 1，差異如下

type 0 : Hall U 的rising edge對應U相相電壓最小值

type 1 : Hall U 的rising edge對應U相相電壓最大值

```
#define    HALL_TYPE    1
```

4. **電流回授線路參數**

系統之相電流及總電流經由外部OPA回授給MCU，對應之參數如下

I. 當系統為 FOC 2R 控制時，對應相電阻參數

```
#ifdef P_2R_FOC
    #define    SHUNT_R_mOhm    100    //Shunt R, unit=mohm
#endif
```

II. 當系統為 FOC 1R 控制時，對應總電流電阻參數

```
#ifdef P_1R_FOC
    #define    SHUNT_R_mOhm    50    //Shunt R, unit=mohm
#endif
```

III. 過電流點設定，單位為 A

```
#define    C_IDC_OVER_CURRENT_1_0_A    5    //Phase Over Current Value in Amp. unit=A
```

IV. 外部 OPA 放大倍率

```
#define    OP_Amp    5    //gain of OP-amp.
```

5. PI 控制器參數

I. 電流環參數

```
//---Kp & Ki for motor current control-------
#define    C_I_Kp    (5000)
#define    C_I_Ki    (1000)/1
```

II. 速度環參數

```
//---Kp & Ki for motor speed PI control-------
#define    C_SP_Kp    983040/8
#define    C_SP_Ki    3276/10*2
```

6. HALL sensor 訊號量測說明

在使馬達運轉之前，需確認Hall sensor訊號與反電動勢之對應關係，以下針對相電壓量測作說明

6.1. 相電壓量測說明

量測相電壓方法如下圖，將馬達三線分別接上外接電阻，接成Y接型式，探棒正端連接馬達出線處，負端則接共用點，手轉馬達或外接原動機即可量測到三相電壓

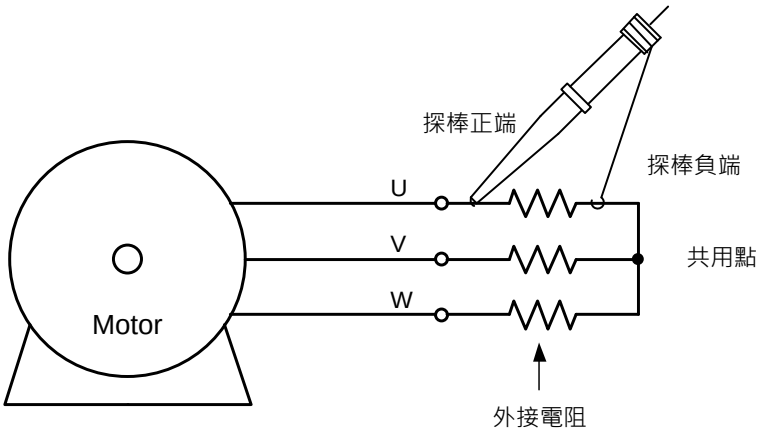

6.2. Hall sensor 訊號及相電壓對應圖

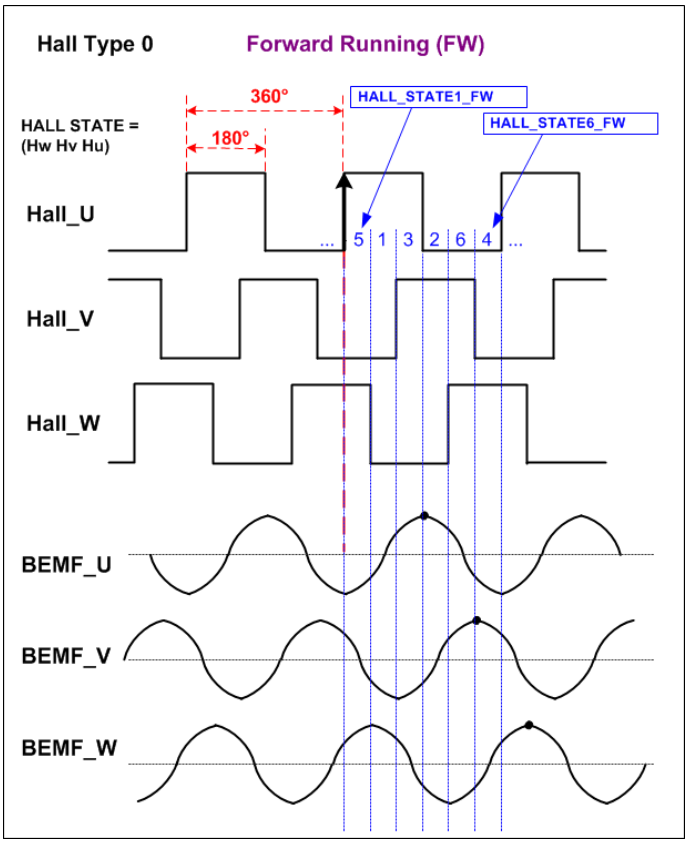

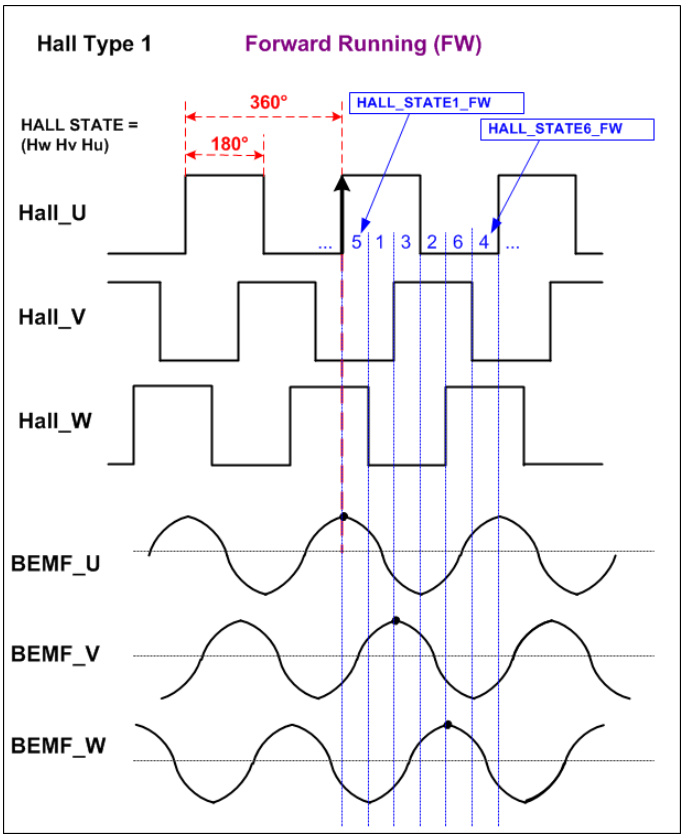
Hall Type 1
Forward Running (FW)
HALL STATE =
(Hw Hv Hu)
360°
180°
HALL_STATE1_FW
HALL_STATE6_FW
Hall_U
Hall_V
Hall_W
... 5 1 3 2 6 4 ...
BEMF_U
BEMF_V
BEMF_W

7. 電流回授說明

7.1. 驅動器線路

下圖為此範例程式使用之馬達驅動器線路，以FOC 2R為例，電流回授為偵測相電阻Rp上之電壓，兩端電壓以V1及V2表示

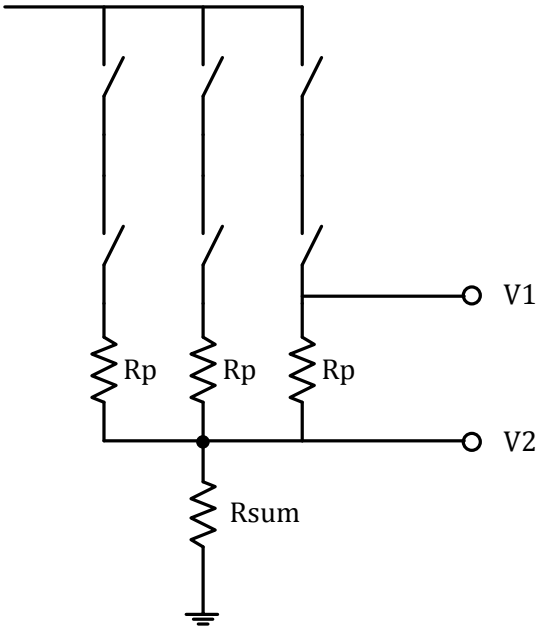

7.2. 電流回授線路

因馬達電流為交流值，故電流回授線路需做準位提升後再放大，透過調整各電阻之比值進而算出放大倍率，使用者可依實際系統之最大電流做倍率調整，最大電流發生時，Vo不超過MCU之VDD電壓

If $\frac{R4}{R3} = \frac{R2}{2\times R1} = G_v$

Then $V_o = G_v \times (V_1 - V_2) + 2.5$

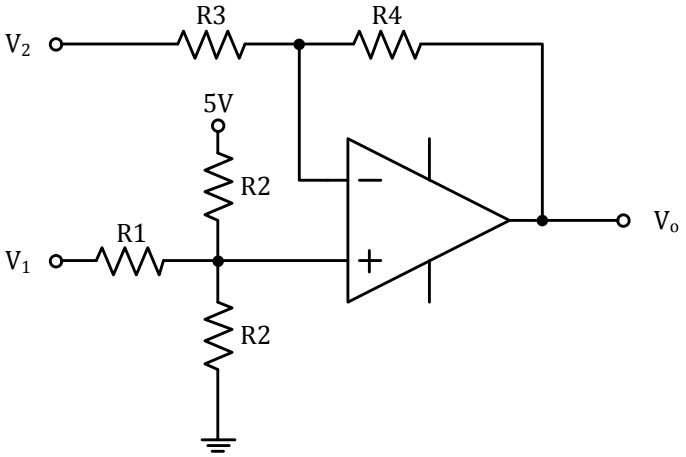

Important Notice

Nuvoton Products are neither intended nor warranted for usage in systems or equipment, any malfunction or failure of which may cause loss of human life, bodily injury or severe property damage. Such applications are deemed, "Insecure Usage".

Insecure usage includes, but is not limited to: equipment for surgical implementation, atomic energy control instruments, airplane or spaceship instruments, the control or operation of dynamic, brake or safety systems designed for vehicular use, traffic signal instruments, all types of safety devices, and other applications intended to support or sustain life.

All Insecure Usage shall be made at customer's risk, and in the event that third parties lay claims to Nuvoton as a result of customer's Insecure Usage, customer shall indemnify the damages and liabilities thus incurred by Nuvoton.

Please note that all data and specifications are subject to change without notice.
All the trademarks of products and companies mentioned in this datasheet belong to their respective owners.