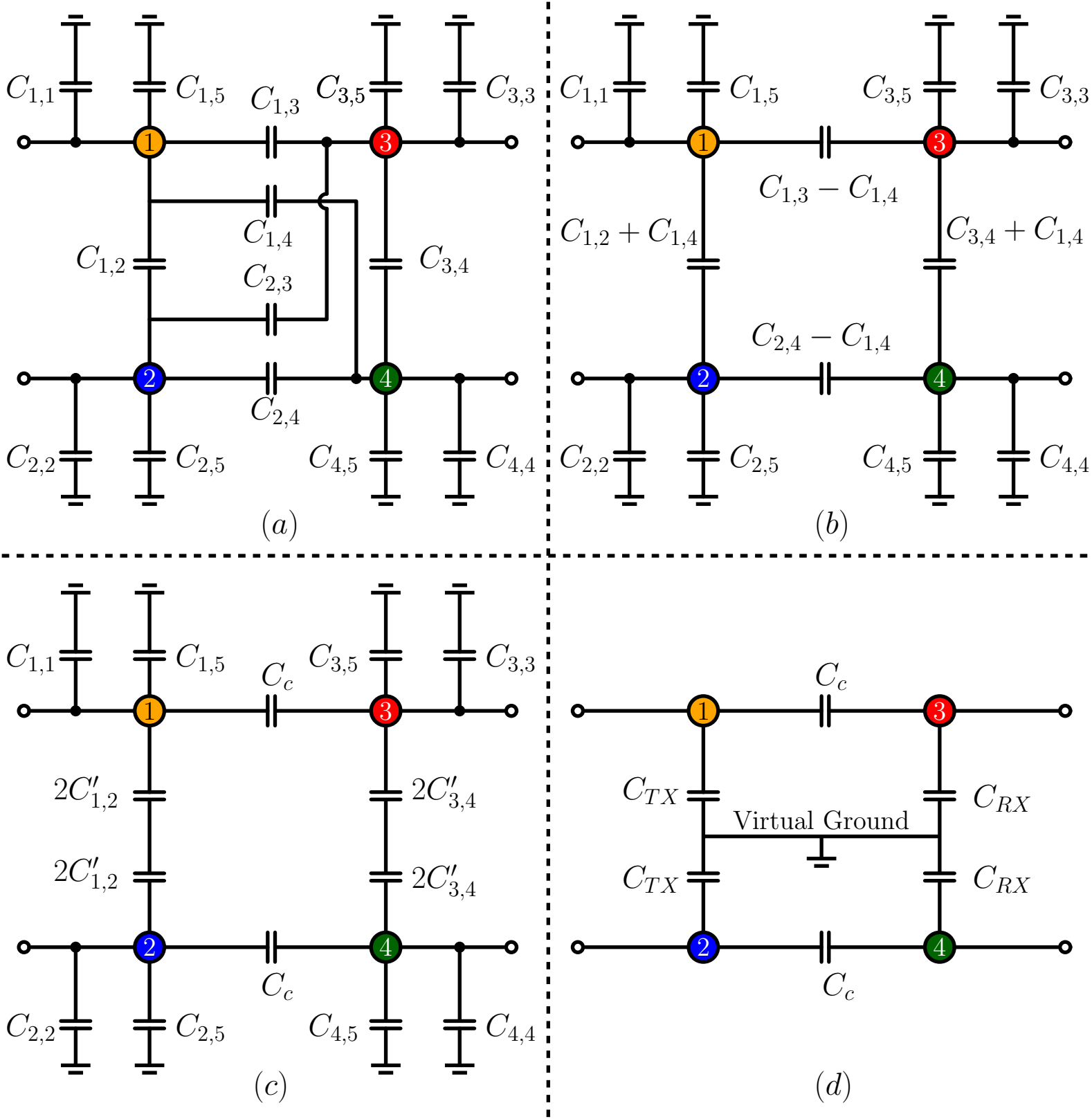
$C_{1,1}$
$C_{1,5}$
$C_{1,3}$
$C_{3,5}$
$C_{3,3}$
1
3
$C_{1,4}$
$C_{1,2}$
$C_{2,3}$
$C_{3,4}$
2
4
$C_{2,4}$
$C_{2,2}$
$C_{2,5}$
$C_{4,5}$
$C_{4,4}$
(a)
$C_{1,1}$
$C_{1,5}$
$C_{3,5}$
$C_{3,3}$
1
3
$C_{1,3} - C_{1,4}$
$C_{1,2} + C_{1,4}$
$C_{3,4} + C_{1,4}$
$C_{2,4} - C_{1,4}$
2
4
$C_{2,2}$
$C_{2,5}$
$C_{4,5}$
$C_{4,4}$
(b)
$C_{1,1}$
$C_{1,5}$
C_c
$C_{3,5}$
$C_{3,3}$
1
3
$2C'_{1,2}$
$2C'_{3,4}$
$2C'_{1,2}$
$2C'_{3,4}$
2
4
C_c
$C_{2,2}$
$C_{2,5}$
$C_{4,5}$
$C_{4,4}$
(c)
C_c
1
3
C_{TX}
C_{RX}
Virtual Ground
C_{TX}
C_{RX}
2
4
C_c
(d)