CPC: Cross-Plus Correlation in RGB-Depth Semantic Segmentation

Zahra Ghelichkhan*, Fahime Fooladgar†, Masoud Khairi Atani‡ and Shohreh Kasaei§
Department of Computer Engineering
Sharif University of Technology
Azadi Ave, Tehran, Iran
Email: *ghelichkhan@ce.sharif.edu, †fooladgar@ce.sharif.edu, ‡atani@ce.sharif.edu, §kasaei@sharif.edu

***Abstract*—Semantic segmentation of RGB-Depth images can be considered as one of the fundamental tasks in 3D scene understanding. Exploiting depth images alongside RGB images has been applied by different fusion policies in encoder-decoder models. Furthermore, capturing long-range contextual information has been considered as an effective factor in dense prediction applications such as semantic segmentation. In this work, the encoder-decoder model with the recurrent cross-plus attention module is proposed to capture the long-range contextual information of fused RGB-depth feature maps. This contextual information has been utilized by the cascaded structural local dependencies. For each pixel position in a feature map, these dependencies have been exploited in the attention module focused on the cross paths of vertical, horizontal, and diagonal pixels. As such, the non-local and long-range contextual information have been investigated implicitly. The experimental results on the popular RGB-Depth datasets illustrate that the proposed model improves the performance of dense prediction in terms of accuracy metrics.**

I. Introduction

One of the fundamental challenges in computer vision is the semantic segmentation; inferring a semantic label for each pixel. Some of the main applications of semantic segmentation include autonomous driving, robotics, and virtual augmented reality. Recent research has shown that utilizing 3D geometry information alongside RGB appearance features improves the performance of semantic segmentation. RGB-Depth images captured from Microsoft Kinect camera provide these 3D geometry and appearance features. Extracting 3D and RGB hand-crafted features fed to the traditional classifiers (such as Support Vector Machine and Random Forest) have been proposed in early research [1]–[5].

Landscapes of computer vision have been changed by introducing Deep Convolutional Neural Networks (DCNNs) [6]–[9]. They actually altered the pipeline of feature extraction and classification to an end-to-end trained features and classifiers. These deep convolutional architectures achieve state-of-the-art results in almost all of the computer vision applications.

The Fully Convolutional Neural Networks (FCNs) [10] improved the performance of dense prediction tasks like semantic segmentation, depth estimation, and surface normal estimation. The DeconvNet [11], dilated convolution [12], and un-pooling [13] methods have been proposed for semantic segmentation to recover the loss of local information caused by the down-sampling operation in CNNs. The encoder-decoder models have been proposed to predict the dense per-pixel labels [13], [14]. The VGG [8], GoogleNet [15], ResNet [6], and DenseNet [7] have been utilized as the encoder to produce intermediate deep feature maps. The decoder branch actually leverages these intermediate feature maps to recover the loss of local information of the encoder. Some other methods proposed deconvolution layers in the decoder side [11]. The SegNet [13] preserved the index of max-pooling operation to employ them in the un-pooling layers of the decoder side. Chen et al. utilized the Atrous convolution with different dilation rates to capture the contextual information [12], [16]. The DeepLabv3+ [16] added the decoder block to DeepLabv3 [17] to recover the semantic labeling of the object boundaries.

To incorporate depth images with RGB images, early [18], middle [19]–[21], and late fusion [10] strategies have been proposed. The vertical and horizontal Long Short-Term Memory (LSTM) method has been applied to exploit the global contextual relations of RGB and depth channels in [22]. Park et al. [23] proposed the RDFNet model for RGB-Depth images. This model has four streams of convolutional layers (RGB encoder, depth encoder, fusion stream, and one decoder stream). The cascaded refinement blocks of the RefineNet model [14] have been utilized in their decoder stream. The identity mapping idea of RefineNet [14] has been employed in the 3M2RNet to fuse the RGB and depth feature maps.

In another direction, some methods incorporate the depth information in a different way. Wang et al. [24] proposed the depth-aware convolution and pooling operations. The geometry-aware convolutional model was proposed by Jiao et al. [25] to jointly predict the semantic labeling and depth information.

In this paper, an encoder-decoder model, called CPC-FuseRefine, is proposed where the ResNet model [6] is utilized as the encoder to extract features from RGB and Depth inputs. These features are exploited in four different resolutions varying from fine low-level features to coarse high-level ones. In the proposed network, all of these features have been utilized in a cascaded manner, as presented in [14]. Moreover, the short- and long-range contextual information have been considered as important factors in semantic segmentation. The CNNs inherently consider the short-range contextual information based on their local receptive field of their architectures. Hence, capturing the non-local dependen-

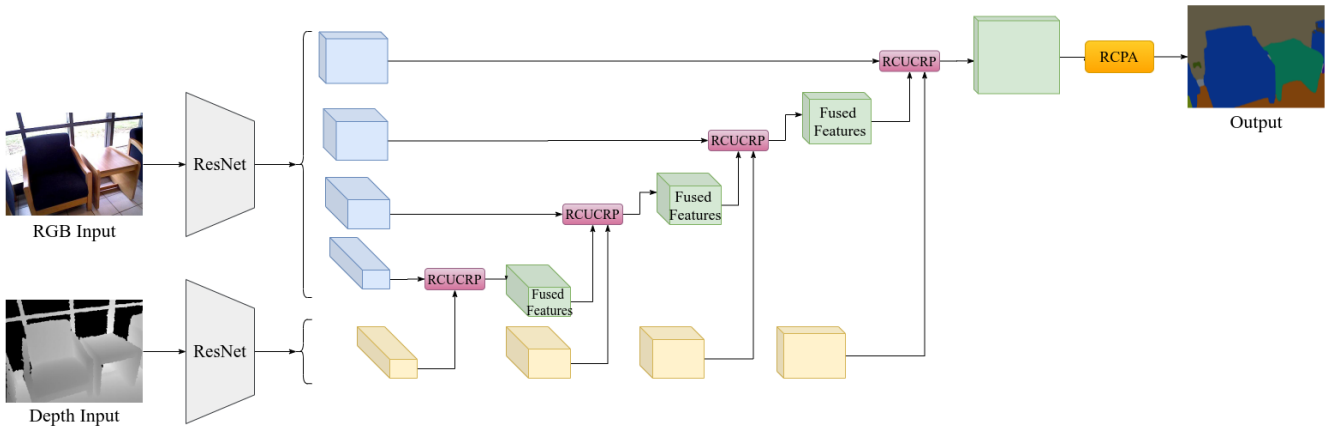

Fig. 1. Overall scheme of proposed CPCFuseRefine network. Feature extractor (ResNet) gives four feature maps with different resolutions from RGB and depth images. These feature maps are fused and refined in RCUCRP blocks (see Figure 2) in a cascaded manner. Resulting feature map is passed through RCPA attention module (see Figure 3) to produce the output.

cies need to be considered. Consequently, the Recurrent Cross-Plus Attention (RCPA) has been proposed to employ these contextual relations. The difference between the proposed CPCFuseRefine method and the RefineNet is that the obtained RGB and depth features are fused in a middle-fusion policy and then the resulting up-sampled feature maps are fed to the proposed RCPA. Main contributions of the proposed method are listed as:

- Proposing Cross-Plus attention to exploit contextual dependencies in a RGB-Depth encoder-decoder model which exploits all possible affiliations in fused feature maps to reach a higher performance.
- Proposing weighted attention map by applying higher weights on the nearby pixels to consider the local dependency in network prediction.

The remainder of this paper is organized as follows. In Section II, the architecture of proposed encoder-decoder model is presented. In Section III, the performance of different methods is evaluated on the existing RGB-Depth datasets. Finally, concluding remarks are offered in Section IV.

II. Proposed Method

The aim of the proposed method is to utilize the RGB and Depth images as the network input to get the output prediction. The proposed fusion approach combines RGB and Depth feature maps in a middle fashion in various resolutions. Applying Recurrent Cross-Plus attention on the last fused feature map, leads to obtain rich and relative contextual information from all pixels. In addition, weighting attention coefficients incorporates the correlation between pixels according to their spatial distances.

Figure 1 illustrates the overall structure of the proposed CPCFuseRefine network. The details are explained in the following subsection and then the proposed Cross-Plus attention module is presented.

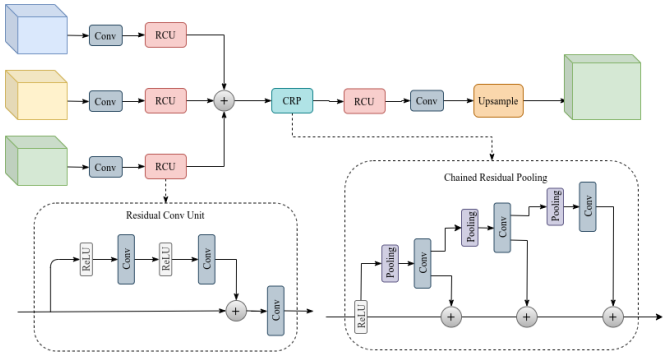

Fig. 2. Details of proposed RCUCRP block. RCU is a residual convolutional unit shown on the left. CRP is a chained residual pooling module which applies three chained poolings to capture a large field-of-view of inputs.

A. CPCFuseRefine Architecture

The backbone network of the proposed model extracts four feature maps from each of RGB and detph input images with different resolutions and number of channels. In the first step, the feature maps with smallest resolution are fed to the first RCUCRP block (see Figure 1). The details of this block is shown in Figure 2. This module consists of Residual Convolution Units (RCU) applied on each of the incoming feature maps. The results are then added and fed to the Chained Residual Pooling (CRP) block introduced in the RefineNet [14] to enlarge the field-of-view of its input. The output of this block is illustrated as the fused feature map in Figure 1. These fused features alongside the next level resolution of the RGB and depth feature maps are employed as the inputs of the next RCUCRP block. This procedure is continued through all variant resolution feature maps to the largest one.

To capture the contextual affiliation in the resulting feature map, the RCPA is proposed to produce attention maps considering the non-local dependencies in rows, columns, and diagonals.

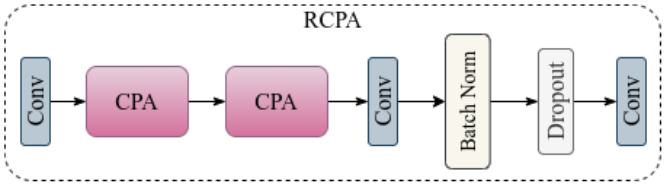

Fig. 3. Proposed RCPA with $R = 2$. This module captures contextual information utilizing the weighted attention. CP attention modules are followed by the semantic segmentor (a convolution block) to produce the segmentation output.

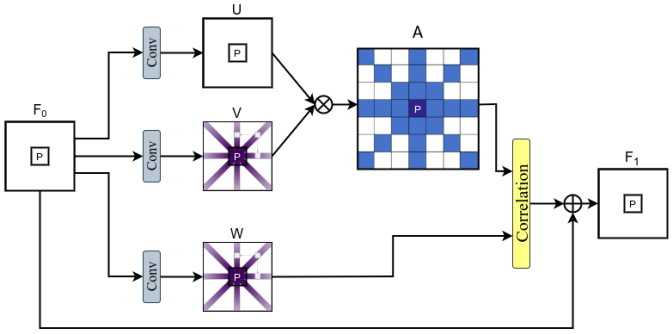

Fig. 4. CPA: Cross-Plus Attention module.

B. RCPA: Recurrent Cross-Plus Attention

One of the main issues of semantic segmentation algorithms is to capture the contextual relationships among pixels. The semantic segmentation losses (e.g., multi-class cross-entropy) does not consider spatial locality. Hence, one of the main challenges is to capture this spatial locality to get better segmentation results. To capture this contextual long range dependencies, in the proposed model, the Cross-Plus attention module is proposed.

The CP module can be used anywhere in a deep neural network with any repetition loops, R, to explore correlations between every pixel and : i) pixels on the same row and column (Plus), and ii) pixels in the same diagonal line with it (Cross). The overall structure of CPA is depicted in Figure 4.

Suppose F_0 is the input feature map to a Cross-Plus Attention (CPA) module. To extract contextual correlation among pixels, three types of feature maps are extracted from F_0 as U, V, and W via three 1×1 convolutions, which are trained in separate streams and then combined to investigate long range dependencies. To get the attention map A from U_p and V_p for pixel p, the multiplication proposed in [26] with the softmax activation function is used as

$$A_p = softmax(U_p \times V_p') \tag{1}$$

where U_p is defined for each pixel p in feature map U, and V_p is the corresponding Cross and Plus pixels of p in V. The V' is defined using element-wise multiplication $\odot$ as

$$V_p' = w_p \odot V_p \tag{2}$$

where the weights w_p are computed by

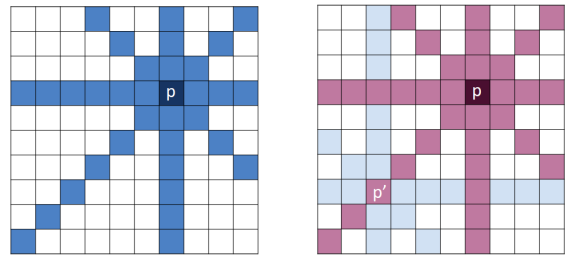

(a) R = 1 (b) R = 2

Fig. 5. Involved pixels in attention map using $R = 1$ (a) and $R = 2$ (b) Cross-Plus modules. Utilizing 2 loops captures the information of most of the pixels present in the feature map as shown in (b).

$$w_p = \begin{cases} \frac{1}{dist(p,p')} & \text{if } p' \in Plus_p \\ \frac{1}{2*dist(p,p')} & \text{if } p' \in Cross_p \\ 0 & \text{o.w.} \end{cases} \tag{3}$$

where $Plus_p$ is the set of all pixels in V which are in the same column or row of p, $Cross_p$ is the set of all pixels in V that are in the same diagonal line with p, and $dist(p, p')$ denotes the Manhattan distance between p and p'.

To get the final feature map, the correlation between A_p and W_p is calculated and then added to the input F_{0p} in the residual format of

$$F_{1p} = Corr(A_p, W_p) + F_{0p}. \tag{4}$$

In the proposed method, $R = 2$ is chosen (see Figure 3). This is because both Plus and Cross pixels in two loops have been considered. Hence, each pixel can use weighted aggregated information of most of the pixels in the activation map (using more loops just imposes extra unnecessary computation). This is shown in Figure 5. On the other hand, $R = 1$ does not capture enough information from all pixels in the activation map.

III. Experimental Results

In order to evaluate the performance of the proposed method, three well-known metrics in semantic segmentation have been utilized; namely, global pixel accuracy (pAcc.), mean class accuracy (mAcc.), and mean of class-wise Intersection over Union (mIoU). The experimental results have been carried out on two indoor scene RGB-Depth datasets.

- **SUN RGB-D**: this dataset consists of 5285 RGB and depth images for training and 5050 images for validation. There are a total of 37 classes (and one void class), where the number of pixels for each class is extremely unbalanced.
- **NYU-V2**: this dataset is smaller to SUN RGB-D. It only has 1449 images with 40 classes.

In Table I, the results of the proposed method and the recent state-of-the-art methods are listed for the SUN RGB-D dataset. As Table I shows, the proposed method has achieved the best global accuracy with the comparable results in two other accuracy metrics.

TABLE I
SEMANTIC SEGMENTATION RESULTS ON SUN RGB-D DATASET.

Method	Modality	pAcc.	mAcc.	mIoU
FCN [10]	RGB	68.2	38.4	27.4
SegNet [13]	RGB	72.6	44.8	31.8
DeepLab [12]	RGB	71.9	42.2	32.1
RefineNet [14]	RGB	80.6	58.5	45.9
FuseNet [19]	RGBD	76.3	48.3	37.3
LSTM-CF [22]	RGBD	-	48.1	-
D-CNN [24]	RGBD	-	53.5	42.0
3D Graph [27]	RGBD	-	57.0	45.9
RDFNet [23]	RGBD	81.5	60.1	47.7
3M2RNet [28]	RGBD	83.1	63.5	49.8
Proposed without CPA	RGBD	83.4	47.9	38.7
Proposed with CPA	RGBD	85.1	59.1	46.2

TABLE II
SEMANTIC SEGMENTATION RESULTS ON NYU-V2 DATASET WITH RGB MODALITY.

Method	R	pAcc.	mAcc.	mIoU
CCNet [26]	3	70.3	54.4	41.6
CCNet+CPA	2	72.5	56.8	43.9

Table II shows the performance comparison between the proposed CPA and CCNet [26] methods on the NYU-V2 dataset. The CCNet model has been proposed only for RGB images. Hence, for a fair comparison, the overall architecture of the CCNet is utilized and trained with both CCNet attention module and the proposed CPA module. As these results show, the accuracy metrics of CCNet with the proposed CPA module are improved. It is notable that the recurrent loop of the CCNet is $R = 3$, where the proposed CPA method uses $R = 2$. This shows that the proposed CPA method considers more non-local dependencies than the CCNet attention module.

IV. CONCLUSION

In this paper, the RGB-Depth semantic segmentation method with the specific attention-based mechanism has been proposed. The proposed model is an encoder-decoder that captures long-range contextual information by the recurrent cross-plus attention module on the RGB-depth fused feature map. In the proposed attention module, the cascaded structural local dependencies are considered to impose the non-local dependencies besides the local ones. The proposed cross-plus attention module achieved approximately $\%2$ higher accuracy than the criss-cross attention method. Furthermore, the proposed model attained the state-of-the-art global accuracy.

ACKNOWLEDGMENT

The authors would like to thank...

REFERENCES

[1] N. Silberman, D. Hoiem, P. Kohli, and R. Fergus, "Indoor segmentation and support inference from rgbd images," in *European Conference on Computer Vision*. Springer, 2012, pp. 746–760.

[2] X. Ren, L. Bo, and D. Fox, "Rgb-(d) scene labeling: Features and algorithms," in *Computer Vision and Pattern Recognition (CVPR), 2012 IEEE Conference on*. IEEE, 2012, pp. 2759–2766.

[3] S. Gupta, R. Girshick, P. Arbeláez, and J. Malik, "Learning rich features from rgb-d images for object detection and segmentation," in *European Conference on Computer Vision*. Springer, 2014, pp. 345–360.

[4] F. Fooladgar and S. Kasaei, "Semantic segmentation of rgb-d images using 3d and local neighbouring features," in *Digital Image Computing: Techniques and Applications (DICTA), 2015 International Conference on*. IEEE, 2015, pp. 1–7.

[5] ——, "Learning strengths and weaknesses of classifiers for rgb-d semantic segmentation," in *Machine Vision and Image Processing (MVIP), 2015 9th Iranian Conference on*. IEEE, 2015, pp. 176–179.

[6] K. He, X. Zhang, S. Ren, and J. Sun, "Deep residual learning for image recognition," in *Proceedings of the IEEE conference on computer vision and pattern recognition*, 2016, pp. 770–778.

[7] G. Huang, Z. Liu, L. Van Der Maaten, and K. Q. Weinberger, "Densely connected convolutional networks." in *CVPR*, vol. 1, no. 2, 2017, p. 3.

[8] K. Simonyan and A. Zisserman, "Very deep convolutional networks for large-scale image recognition," *arXiv preprint arXiv:1409.1556*, 2014.

[9] A. Krizhevsky, I. Sutskever, and G. E. Hinton, "Imagenet classification with deep convolutional neural networks," in *Advances in neural information processing systems*, 2012, pp. 1097–1105.

[10] J. Long, E. Shelhamer, and T. Darrell, "Fully convolutional networks for semantic segmentation," in *Proceedings of the IEEE conference on computer vision and pattern recognition*, 2015, pp. 3431–3440.

[11] H. Noh, S. Hong, and B. Han, "Learning deconvolution network for semantic segmentation," in *Proceedings of the IEEE international conference on computer vision*, 2015, pp. 1520–1528.

[12] L.-C. Chen, G. Papandreou, I. Kokkinos, K. Murphy, and A. L. Yuille, "Deeplab: Semantic image segmentation with deep convolutional nets, atrous convolution, and fully connected crfs," *IEEE transactions on pattern analysis and machine intelligence*, vol. 40, no. 4, pp. 834–848, 2018.

[13] V. Badrinarayanan, A. Kendall, and R. Cipolla, "Segnet: A deep convolutional encoder-decoder architecture for image segmentation," *IEEE transactions on pattern analysis and machine intelligence*, vol. 39, no. 12, pp. 2481–2495, 2017.

[14] G. Lin, A. Milan, C. Shen, and I. D. Reid, "Refinenet: Multi-path refinement networks for high-resolution semantic segmentation." in *Cvpr*, vol. 1, no. 2, 2017, p. 5.

[15] C. Szegedy, W. Liu, Y. Jia, P. Sermanet, S. Reed, D. Anguelov, D. Erhan, V. Vanhoucke, and A. Rabinovich, "Going deeper with convolutions," in *Proceedings of the IEEE conference on computer vision and pattern recognition*, 2015, pp. 1–9.

[16] L.-C. Chen, Y. Zhu, G. Papandreou, F. Schroff, and H. Adam, "Encoder-decoder with atrous separable convolution for semantic image segmentation," in *Proceedings of the European conference on computer vision (ECCV)*, 2018, pp. 801–818.

[17] L.-C. Chen, G. Papandreou, F. Schroff, and H. Adam, "Rethinking atrous convolution for semantic image segmentation," *arXiv preprint arXiv:1706.05587*, 2017.

[18] C. Couprie, C. Farabet, L. Najman, and Y. LeCun, "Indoor semantic segmentation using depth information," *arXiv preprint arXiv:1301.3572*, 2013.

[19] C. Hazirbas, L. Ma, C. Domokos, and D. Cremers, "Fusenet: Incorporating depth into semantic segmentation via fusion-based cnn architecture," in *Asian Conference on Computer Vision*. Springer, 2016, pp. 213–228.

[20] J. Wang, Z. Wang, D. Tao, S. See, and G. Wang, "Learning common and specific features for rgb-d semantic segmentation with deconvolutional networks," in *European Conference on Computer Vision*. Springer, 2016, pp. 664–679.

[21] H. Liu, W. Wu, X. Wang, and Y. Qian, "Rgb-d joint modelling with scene geometric information for indoor semantic segmentation," *Multimedia Tools and Applications*, pp. 1–14, 2018.

[22] Z. Li, Y. Gan, X. Liang, Y. Yu, H. Cheng, and L. Lin, "Lstm-cf: Unifying context modeling and fusion with lstms for rgb-d scene labeling," in *European Conference on Computer Vision*. Springer, 2016, pp. 541–557.

[23] S.-J. Park, K.-S. Hong, and S. Lee, "Rdfnet: Rgb-d multi-level residual feature fusion for indoor semantic segmentation," in *The IEEE International Conference on Computer Vision (ICCV)*, 2017.

[24] W. Wang and U. Neumann, "Depth-aware cnn for rgb-d segmentation," in *Proceedings of the European Conference on Computer Vision (ECCV)*, 2018, pp. 135–150.

[25] J. Jiao, Y. Wei, Z. Jie, H. Shi, R. W. Lau, and T. S. Huang, "Geometry-aware distillation for indoor semantic segmentation," in *Proceedings of the IEEE Conference on Computer Vision and Pattern Recognition*, 2019, pp. 2869–2878.

[26] Z. Huang, X. Wang, L. Huang, C. Huang, Y. Wei, and W. Liu, "Ccnet: Criss-cross attention for semantic segmentation," in *Proceedings of the IEEE International Conference on Computer Vision*, 2019, pp. 603–612.

[27] X. Qi, R. Liao, J. Jia, S. Fidler, and R. Urtasun, "3d graph neural networks for rgbd semantic segmentation," in *Proceedings of the IEEE Conference on Computer Vision and Pattern Recognition*, 2017, pp. 5199–5208.

[28] F. Fooladgar and S. Kasaei, "3m2rnet: Multi-modal multi-resolution refinement network for semantic segmentation," in *Science and Information Conference*. Springer, 2019, pp. 544–557.