Standard Procedure of Checking

Checkers Fucntion

*Checkers has a big rule as far as quality is concern,because they are the one who is responsible of the checking for every plan and to ensure also that the quality of every output plan has a high quality.

Objective:

* To set a standard way of checking so that all the checkers have a uniform style or one Knowledge in terms of checking, and to filter all the mistakes committed by the Encoders before it will send back to our valued clients.

Goals:

* To lessen the mistakes or feedbacks from our clients/architects into the lowest percentage As much as possible.

*Aiming High quality of every finish plan that we produce is our main concern.

*To satisfy our valued clients/customer in every plan we deliver.

*To deliver the plan ahead of the schedule.

*To strengthen more confidence and trust that the clients/customer entrusted to us.

Standard Procedure of Checking

1. Self Check Procedure

Step 1. Scanning:

Scan first all the request in the plan,if there is some request that is not clear or confusing ask your sub leader or team leader regarding the matters.

Step 2. Annalization:

Annalize every request of the architect so that you will understand what he wants to do in his request.

Materials to be use for checking:

Red Ballpen: For the correction or mistake

Blue Ballpen: For instruction

Yellow Highligher: For Title block

Request Hardcopy PDF and finished hard copy pdf.

Step 3. After encoding highlight every item request that you already revised using yellow highlighter.same rotation clockwise.

Step 4. Use brava checking,import the request pdf and compare to the finish pdf.

Click this button to open the two windows.
the other one is the finish pdf and the other side is request pdf or translated pdf files
compare each pdf,by using zoom in and zoom out,
if there is a mistake just simply in circle the item which is wrong
using RED BALLPEN.

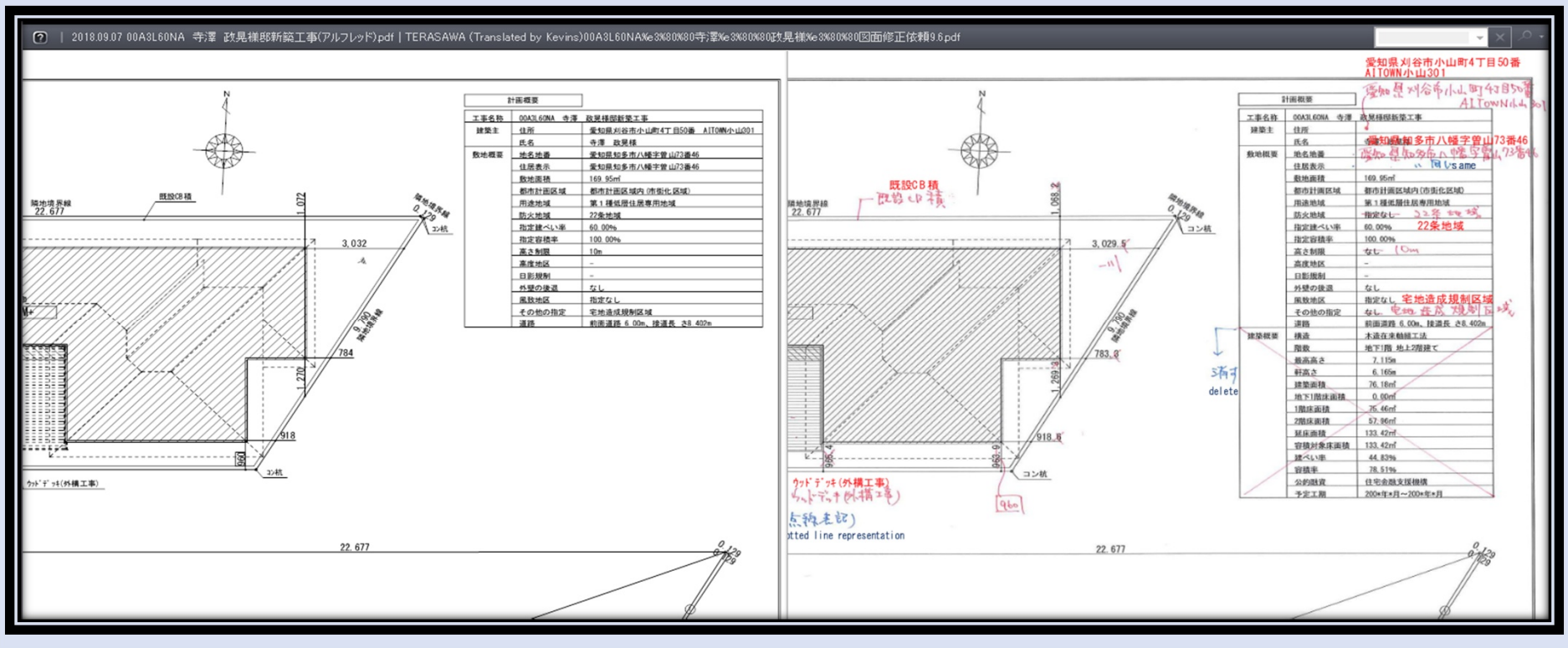

Step 5. After revising the request, passed it to the assign checker, for the first check, then provide a hard copy revised pdf.

Request Hard copy Pdf

Encoders should highlight with color yellow every request they revised as an indication that the request has already been revised

Standard Procedure of Checking

1. 1st Check Procedure

Checkers are divided into 5 groups, their main concern is the quality of every output in their respective groups,
Sharing of knowledge and collaboration between his members is the best thing to do,
to improve Their skills and knowledge regarding the plan they handle.

Materials to be use for checking:

Red Ballpen: For the correction or mistake
Blue Ballpen: For instruction
Orange Highligher: For Title block
Request Hardcopy PDF and finished hard copy pdf.

*Encoders must provide all the neccesary papers, such as checklist,request paper,and the revised hard copy pdf.

Step 1. Check the attached Checklist from from the encoder and compare to the spreadsheet.

	00W6K77NT	saito	2018/7/30				訂正予定無	PDF	アーキ	JW	図面確定前	8/2	Nicco	2018/07/31
13	小川　佳克　様	平面詳細図の作成と電気配線図の作成をお願いします。※JWﾃﾞｰﾀで電気配線図を作成してますので、そのままｱｰｷに読み込んで下さい。											BASIC	
	ogawa	Please create a floor detailed plan and electrical plan.* Since we have created electrical wiring diagrams with JW data, please load to the archi directly.(Translated by Jes)												
	図面送付先/ person to receive	齋藤　高之	t.saito@eco-ntk.com				#N/A					#N/A		

Take note:
Spreadsheet and checklist should be the same,to avoid confusion and mistake.
Although it is responsibility of the distributor, but the encoder also has a part and the checker as well.

PROJECT NAME:	Ogawa	RECEIVED:	7/30	SCOPE							
REQUESTOR:	Saito	DEADLINE:	8/2	☐	P	☒	DP	☒	EP	☒	S	☐	DS
IN-CHARGE:	Nicco		STATUS	☐	PERS	☐	Walkthrough	☐	Others		
			☒ BASIC	☐	with Archidata	Data on Server			
			☐ 図面確定	☐	Send Archidata	Archidata			
			☐ 承認図	☐	With JWW	PDF			

CHECKLIST

Y	N	Conditions	Y	N	Conditions
		General Conditions	☐	☐	room floor heights are properly labeled (FL-/FL+)
☐	☐	Basic DP/EP (check Y if new project)	☐	☐	ceiling heights are properly labeled (CH=)
☐	☐	Basic EP (with or without DP)	☐	☐	flooring symbol is properly oriented
☐	☐	all the pages are in order (PDF and printed)	☐	☐	cold water supply for toilet, laundry and outdoor basin
☐	☐	contract code is correct and match all pages	☐	☐	hot and cold water supply for shower, kitchen sink, and vanity
☐	☐	project name is correct and match all pages	☐	☐	floor access symbol for dressing room
☐	☐	company logo is correct and match all pages	☐	☐	floor storage for kitchen
☐	☐	date is updated and match all pages	☐	☐	ceiling access (2F or attic/loft/PH)
☐	☐	architect, IC and sales' name are indicated	☐	☐	wall access (attic/loft/PH)
☐	☐	title block is updated with additional notes (DP/EP)	☐	☐	area chart is updated and match all floors
		Site Plan			Elevation Plan
☐	☐	boundary lines are properly labeled	☐	☐	north, south, east, west side are correct and properly placed
☐	☐	house outline is thick	☐	☐	south and east sides have dimension lines
☐	☐	kyuusekizu values match the boundary lines	☐	☐	walls have correct finish and hatching
☐	☐	symbol for drain is correct and complete	☐	☐	roof material is correct
☐	☐	symbol for rainwater drain is correct and connected to spout	☐	☐	roof slope is correct and indicated
☐	☐	contract code and project name are correct in the information table	☐	☐	noki dimension has parentheses
☐	☐	site area matches the kyuusekizu table	☐	☐	keraba dimension has parentheses
☐	☐	maximum height matches elevation plan	☐	☐	(+60) keraba allowance for colonial/metal roof
☐	☐	floor areas are updated and match DP area chart	☐	☐	(+100) keraba allowance for tiled roof
☐	☐	construction and lot areas are updated and match DP area chart	☐	☐	hipped roofs have snow stoppers
☐	☐	site compass has correct angle	☐	☐	solar panels are updated and match request
☐	☐	building coverage ratio is correct and less than requirement	☐	☐	windows/door count matches DP
☐	☐	floor area ratio is correct and less than requirement	☐	☐	gutter and spout symbols are updated
		Presentation/Detailed Plan	☐	☐	foundation height is correct
☐	☐	torishin lines are correct and match P/DP/EP	☐	☐	1F/2F heights are correct
☐	☐	dimension lines are measuring the rooms' wall (center-to-center)	☐	☐	attic height is 1400 (+36 for 2F height)
☐	☐	walls have finishes on all sides	☐	☐	maximum height is computed and correct
☐	☐	posts are on-grid	☐	☐	labels are not overlapping
☐	☐	posts not on-grid have dimension lines			Electrical Plan
			☐	☐	floor plan is updated and matched DP
			☐	☐	floor plan details are thin-lined (line 6)
			☐	☐	electrical details are thick-lined (line 5)

Standard Procedure of Checking

2. 1st Check Procedure

TITLE BLOCK

Step 2. Check the Title Block from Site plan (**配置図**) to the last page, either it si Electrical or Storage Plan(**収納図**)

工事名			管理設計担当	営業設計担当	営業担当	図面名	縮尺	承認印
OSW6K77NT小川佳克様邸新築工事	ORGANIC HOUSE 株式会社 西東京建設	2018/08/03		齋 藤 高 之	齊 木 晃 司	配置図	1/100	
OSW6K77NT小川佳克様邸新築工事	ORGANIC HOUSE 株式会社 西東京建設	2018/08/03		齋 藤 高 之	齊 木 晃 司	1階 平面詳細図	1/50	
OSW6K77NT小川佳克様邸新築工事	ORGANIC HOUSE 株式会社 西東京建設	2018/08/03		齋 藤 高 之	齊 木 晃 司	2階 平面詳細図	1/50	
OSW6K77NT小川佳克様邸新築工事	ORGANIC HOUSE 株式会社 西東京建設	2018/08/03		齋 藤 高 之	齊 木 晃 司	立面図	1/100	
OSW6K77NT小川佳克様邸新築工事	ORGANIC HOUSE 株式会社 西東京建設	2018/08/03		齋 藤 高 之	齊 木 晃 司	1階 電気配線図	1/50	
OSW6K77NT小川佳克様邸新築工事	ORGANIC HOUSE 株式会社 西東京建設	2018/08/03		齋 藤 高 之	齊 木 晃 司	2階 電気配線図	1/50	

*Use Orange highlighter to all title block

In checking the title block check first the spreadsheet if theres a request for Plan Confirm,department meeting, and approval plan,

13	00W6K77NT	saito	2018/7/30	訂正予定無	PDF	アーキ	JW	図面確定前	8/2	Nicco	2018/07/31
	小川 佳克 様	平面詳細図の作成と電気配線図の作成をお願いします。※JWﾃﾞｰﾀで電気配線図を作成してますので、そのままｱｰｷに読み込んで下さい。								BASIC
	ogawa	Please create a floor detailed plan and electrical plan.* Since we have created electrical wiring diagrams with JW data, please load to the archi directly.(Translated by Jes)								
	図面送付先/ person to receive	齋藤 高之	t.saito@eco-ntk.com		#N/A		#N/A			

Plan confirm

Plan confirm text standard
is above the date
fontsize is 3

Approval Plan

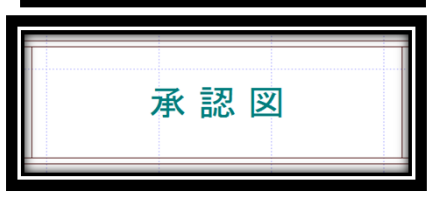

Approval plan text is
the replacement of the date

For department meeting

Compare finished printouts pdf to the requested printouts pdf,if the requested printouts pdf is not clear,check it to the pdf in server.

Standard Procedure of Checking

3. 1st Check Procedure

LEGEND

Step 3. Check all the legends from 1st floor to attic check also if the masters is updated.

Materials to be use for checking:
Use Red Ballpen for correction
Use Blue Ballpen for instruction

Compare finished printouts pdf to the requested printouts pdf,if the requested printouts pdf is not clear,check it to the pdf in server.

Including in the Legend are the Ceiling height of the house which is standard to all house construction company,and the Area Table.

※特記なきCH=2400

階	面 積	㎡(坪)
地下1階	0.00	(0.00)
1階	78.66	(23.79)
2階	55.58	(16.81)
延 床 面 積	134.24	(40.60)
施工床面積	159.07	(48.11)
建 築 面 積	93.57	(28.30)

Updated Master

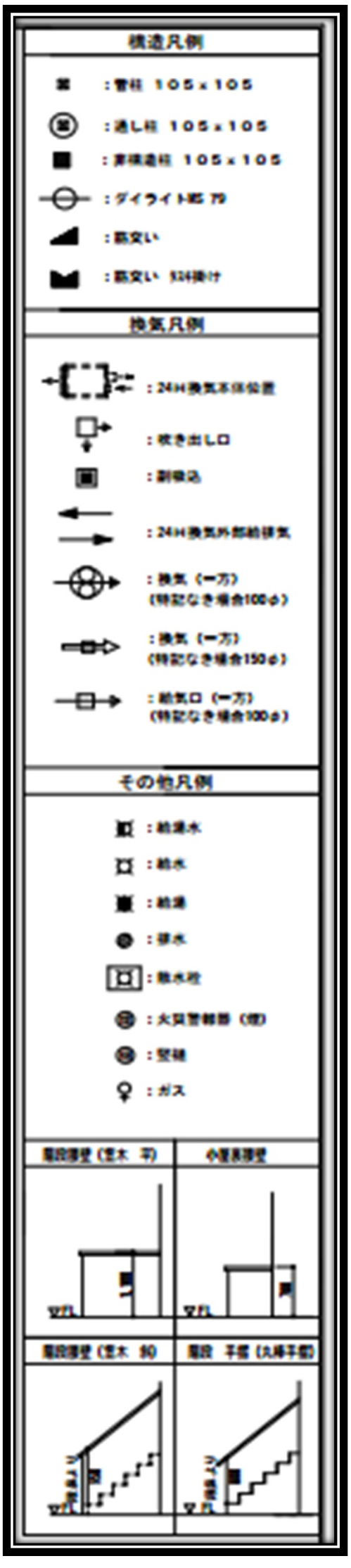

Outdated Master

Standard Procedure of Checking

4. 1st Check Procedure

Site Plan

Step 4. Check the Entire Site Plan even if theres no request.
Start at:

①

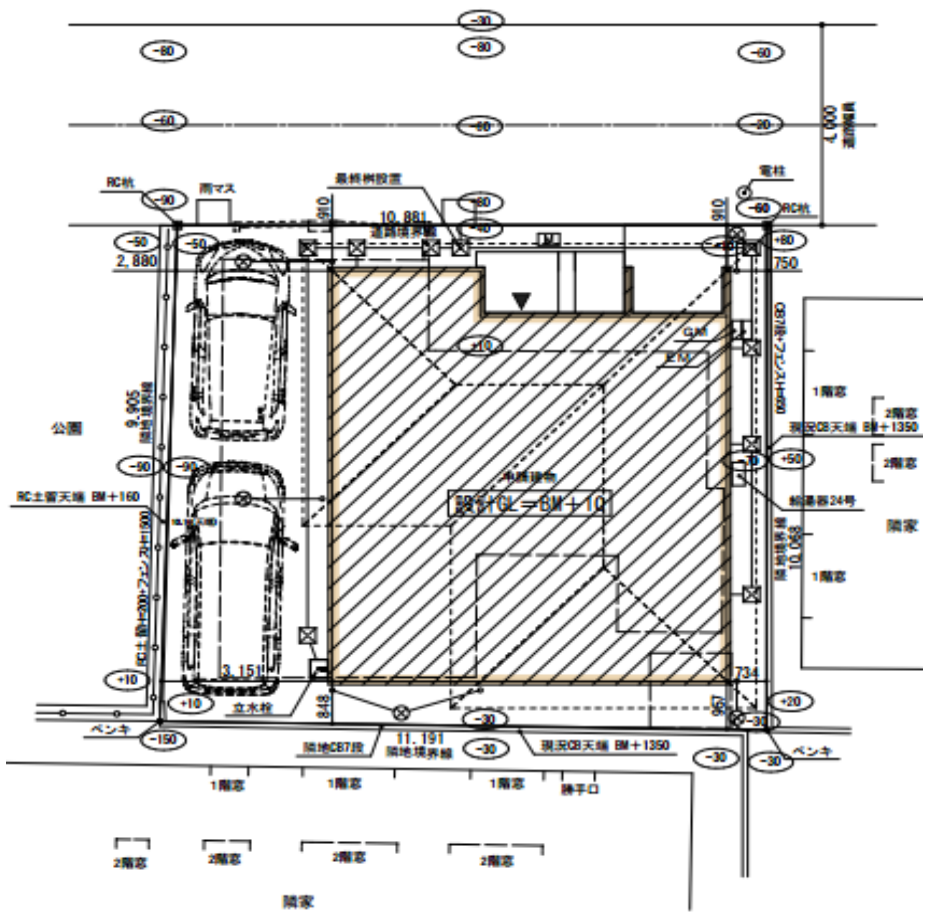

②

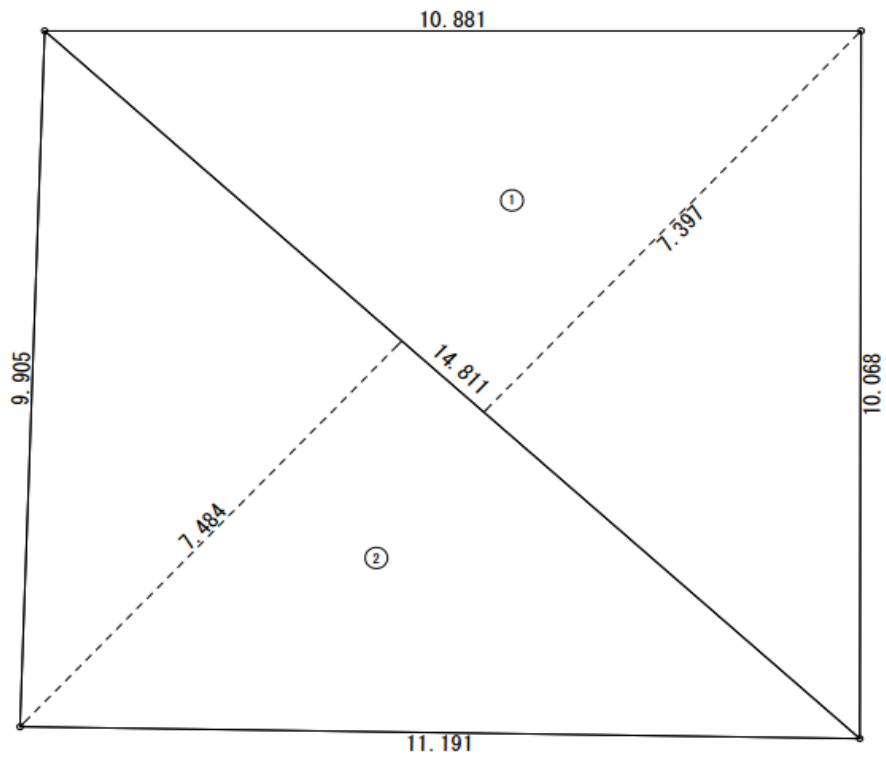

求積図 S：1/100

敷地面積			
	底辺（m）	高さ（m）	倍面積（㎡）
①	14.811	7.397	109.556967
②	14.811	7.484	110.845524
倍面積 計			220.402491
敷地面積 （㎡）			110.20

③

計画概要

工事名称	0179J98D 平沢 真 様邸新築工事	
建築主	住所	東京都武蔵野市八幡町4-3-5
	氏名	平沢 真 様
敷地概要	地名地番	東京都武蔵野市八幡町4丁目300番35
	住居表示	東京都武蔵野市八幡町4-3-5
	敷地面積	110.20㎡
	都市計画区域	都市計画区域内(市街化区域)
	用途地域	第１種低層住居専用地域
	防火地域	準防火地域
	指定建ぺい率	60.00%（角地緩和利用）
	指定容積率	100.00%
	高さ制限	10m
	高度地区	第一種高度地区
	日影規制	3h/2h/1.5m
	外壁の後退	なし
	風致地区	指定なし
	その他の指定	なし
	道路	前面道路 3.99（4.00）m、接道長さ 10.88m
建築概要	構造	木造在来軸組工法
	階数	2階建て
	最高高さ	7.528m
	軒高さ	6.165m
	建築面積	59.62㎡
	1階床面積	55.48㎡
	2階床面積	49.68㎡
	延床面積	105.16㎡
	容積対象床面積	105.16㎡
	建ぺい率	55.42%
	容積率	97.75%
	公的融資	
	予定工期	

Check all the legends from 1st floor to attic
using blue ballpen and red ballpen if there a correction

compare the Floor plan and Site plan especially the Outdoor machine and water faucet and sprinklers

Compare finished printouts pdf to the requested printouts pdf,if the requested printouts pdf is not clear,check it to the pdf in server.

Standard Procedure of Checking

5. 1st Check Procedure

Detailed Plan

Step 5. Check the Outside/outdoor if theres a request such as:
Direction of checking is Clockwise

Materials:
Use Red Ballpen for correction
Use Blue Ballpen for instruction

By checking the detailed plan it should be per floor,do not go to 2nd floor if the 1st floor is not yet finish.

*Ecokyu-to
*Enefarm
*Outside faucet
*Sprinkler
*Gas Pump
*Floor heater Pump
*Torishin
*Dimension
*Windows Specs

Count the Number of windows per side
and write down the number in the revised paper.

Step 6. Internal Request such as:
Direction of Encoding is from upper left
room by room Clockwise:

Materials:
Use Red Ballpen for correction
Use Blue Ballpen for instruction

*Wall
*Layout
*Doors Specs and Location
*Text/Labels/Callouts
*Item/Patterns

After checking the request,scan the whole plan,for previous mistake purposes.

Compare finished printouts pdf to the requested printouts pdf,if the requested printouts pdf is not clear,check it to the pdf in server.

Elevation Plan

Step 7. Check all the Elevation From South,East,North and West.

Materials:
Use Red Ballpen for correction
Use Blue Ballpen for instruction
Pink Highlighter

*Building Height computation
*Roof dimensions
*Slope
*Yukidome
*Spout
*Window counting

check also the 3D presentation in elevation such as:
Main Porch ,service porch,wooddeck and etc.
if the height display in the DP is the same in Elevation

DP

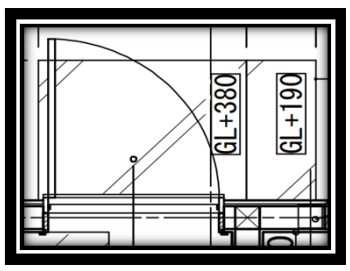

Elevation

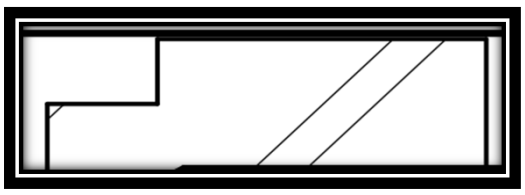

Special attention to windows,counts the window of elevation per side, and compare the numbers of windows to Floor plan per side also.

*Spout Checking use a color Pink highligher,every spout to make sure that the 3d presentation in Elevation same in Floor plan,

Standard Procedure of Checking

6.	1st Check Procedure

ELECTRICAL PLAN

Step 8. Check or compare first the item request like 3D patterns,walls and etc.in the electrical plan, if theres a changes in Detailed plan.
Then proceed to check the electrical request of architect.
Start at upper left clockwise
room by room so that all the request will be seen.

Materials:
Use Red Ballpen for correction
Use Blue Ballpen for instruction

Compare finished printouts pdf to the requested printouts pdf,if the requested printouts pdf is not clear,check it to the pdf in server.

After check don't forget to input in the Plan monitoring the Time started and time finished of checking and also don't forget to input in mistake monitoring all the mistakes from encoders to reflect the accuracy of the Encoders.

Step 9. Blow-up or storage Plan for actie plan

Compare every letters in storage plan in detailed plan and annalize it correctly

Detailed Plan

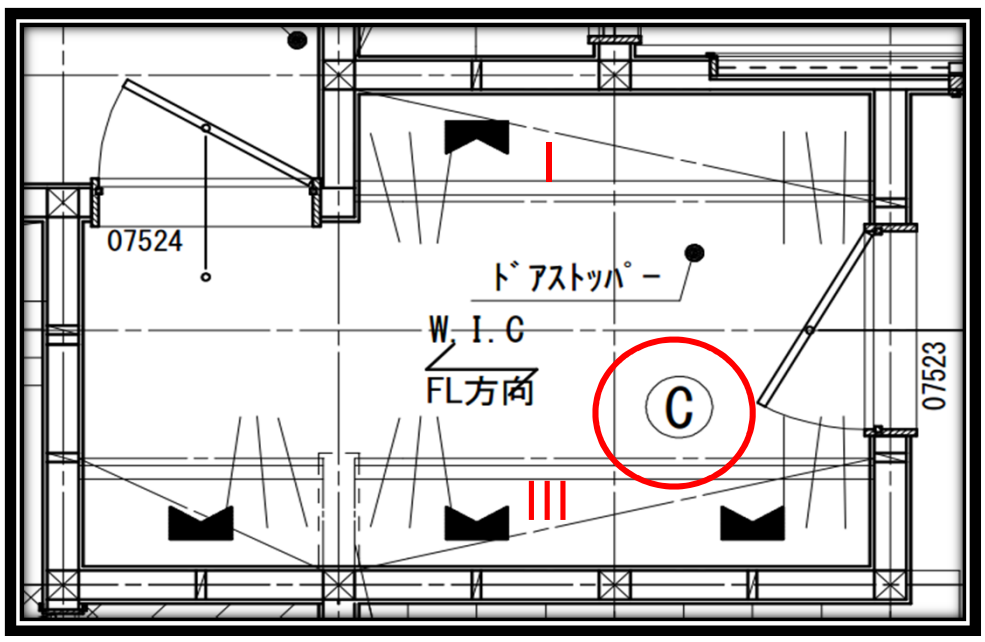

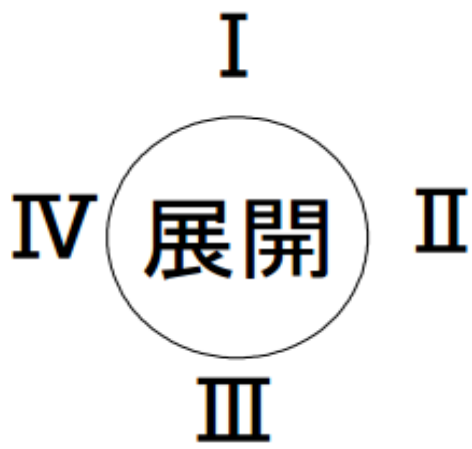

Numerical symbol indicates the location of a storage/hanger pipe/ and shelves.
that need to present in the blow-up plan.

Presentaion of Blow-up in Storage Plan

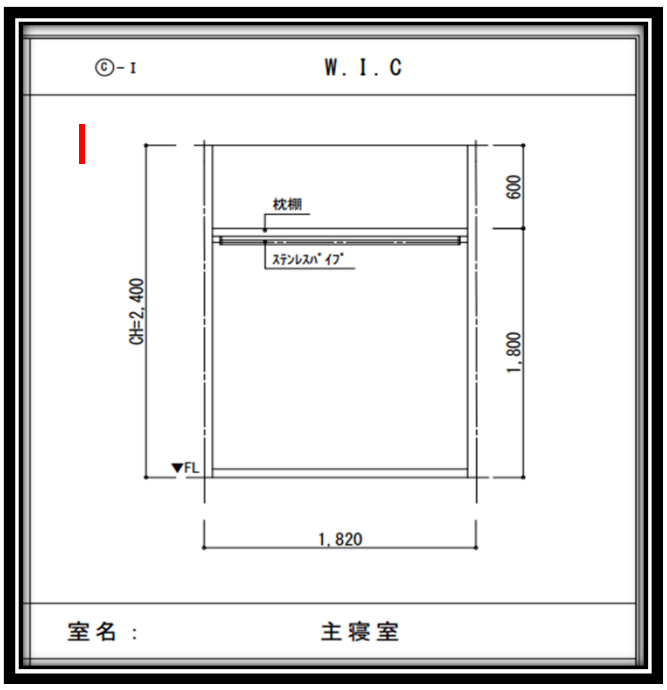

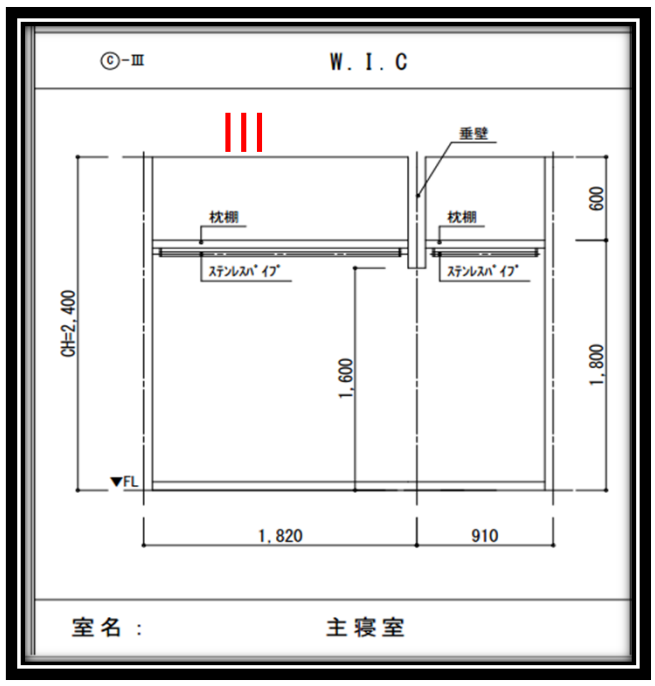

7. Checking of Kanji Character

Checking of Japanese character is very challenging it takes years to familiarize some kanji terminologist.
Although translating japanese character is not our job,it is the job of TRANSLATION DEPARTMENT.

But as a checker it is important also that we have to familiarize some kanji characters because there are some mistakes in characters that the translators sometimes overlooked.

Ways of Checking:

1st. Check the pdf In the server.(TRANSLATED FILES),and open the request PDF.
If you encounter that some character are not translated,please ask the in-charge translator, and ask him for translation.

2nd.If you notice that the character they translated is doubting or not looked alike as the request, kindly copy the translation character to GOOGLE TRANSLATE,for you to have an idea if the meaning of japanese character is correct or not.

Materials:
Use Red Ballpen for correction
Use Blue Ballpen for instruction
Soft copy of translation PDF in the server.

Check every kanji character(word for word) using the BLUE BALLPEN from left to right.
If you think that the kanji character whom the translator,translated is in correct, confirm first to your team leades,before asking the Translator in charge.

If you found out that the character is in correct,upon reviewing and confirmation,kindly encircle the wrong kanji character using RED BALLPEN,and don't forget to give a hard copy of the request to your team leader, for the Feedbacks.

Team leader or sub-leader must inform the Translation department regarding the mistakes,thru SKYPE.

Reminder:

The kanji character which is written in Blue Pen In the Request,is An INSTRUCTION ONLY
No need to input the character in the plan.
But Follow the instruction what the architects wants.

The Kanji character which is written in Red Pen in the Request,is NEED to input in Architrend.
How? Copy from the translated files in the Server.

8. 2nd Check Procedure

Encoders:

After revising the correction from checker in the first check ,they should highlight the correction area using YELLOW Highlighter,to make sure that the correction from checker is well revised.

Material to be use:

Yellow Highlighter

Don't Forget to input time and some other details in PLAN MONITORING,when it was started and finish. And then proceed to 2nd check give it to the same checker.

*in case of turnover plan its ok if the 2nd check is other checker.

Same Checker from 1st check to 2nd check

Standard :

1st: Check the corrected item that saw in the first check

*Correction from title block (site to electrical Plan)
*Correction of legend if theres any
*Correction of Site plan if theres any
*Correction of Detailed plan (1st floor,2nd floor and attic)
External/Outdoor
Windows specs
Internal/Indoor
*Correction of Elevation if there any
*Correction of Electrical plan if theres any(1st,2nd and attic)

2nd: Per page from Site down to Electircal plan.

3rd: Before finishing the checking,Scan the revision request,per page from the start.

After check don't forget to input in the Plan monitoring the Time started and time finished of checking and also don't forget to input in mistake monitoring all the mistakes from encoders to reflect the accuracy of the Encoders.

Standard Procedure of Checking

9. Final Check Procedure

Encoders:

After revising the correction from checker in the 2nd check ,they should highlight again the correction area by using YELLOW Highlighter,to make sure that the correction from 2nd checker is well revised.

Material to be use:

Yellow Highlighter

Don't Forget to input time and some other details in PLAN MONITORING,when it was started and finish. And then proceed to Final check give it to the incharge of final check.

*in case of turnover plan its ok if the Final checker is other checker.

Final check in charge:

Edison Que	Morning Shift	
*Joshua	Morning Shift	Optional
Marvin	Night shift	
Suzuki san	Night shift	

Standard Rules:

*Checkers aside from the final checkers mentioned above is not allowed to perform final check unless there is a permission from the leader(Edison/Marvin/Josh

Final check covers only the request from the architect
from site plan to electrical plan.
Perform first the final checking before going to check the BRAVA

Materials:
Use Red Ballpen for correction
Use Blue Ballpen for instruction
Request Hard copy pdf and
finished prinouts pdf

Compare finished printouts pdf to the requested printouts pdf,if the requested printouts pdf is not clear,check it to the pdf in server.

After check don't forget to input in the Plan monitoring the Time started and time finished of checking and also don't forget to input in mistake monitoring all the mistakes from encoders to reflect the accuracy of the checkers.

Standard Procedure of Checking

10. BRAVA Check Procedure

Brava is one of the vital part of checking where you can see the previous plan and compare it to the new revised plan.

Materials:
Use Red Ballpen for correction
Use Blue Ballpen for instruction
Request Pdf and the Printouts of Brava Pdf

Request PDF

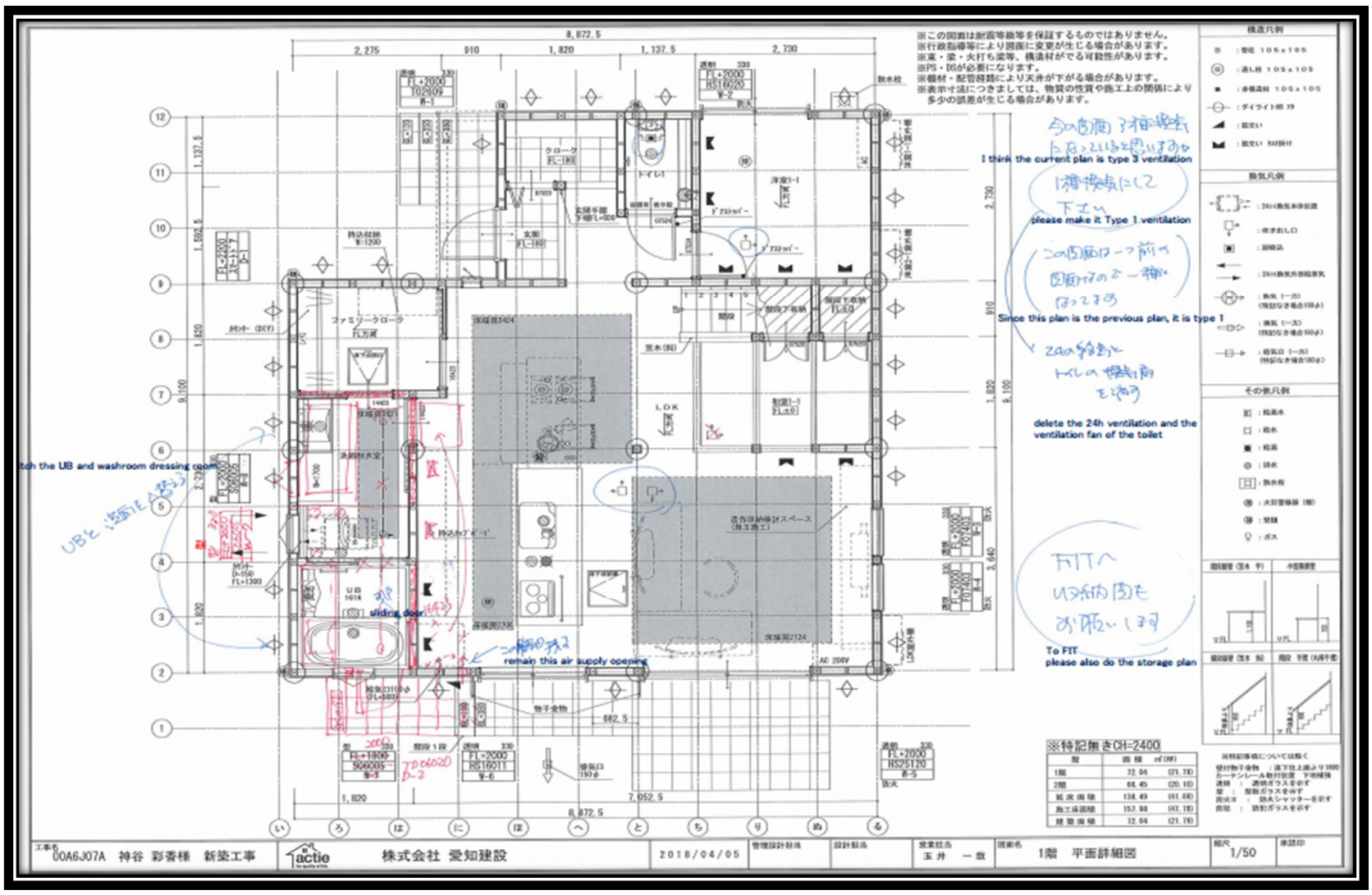

Prinouts BRAVA PDF

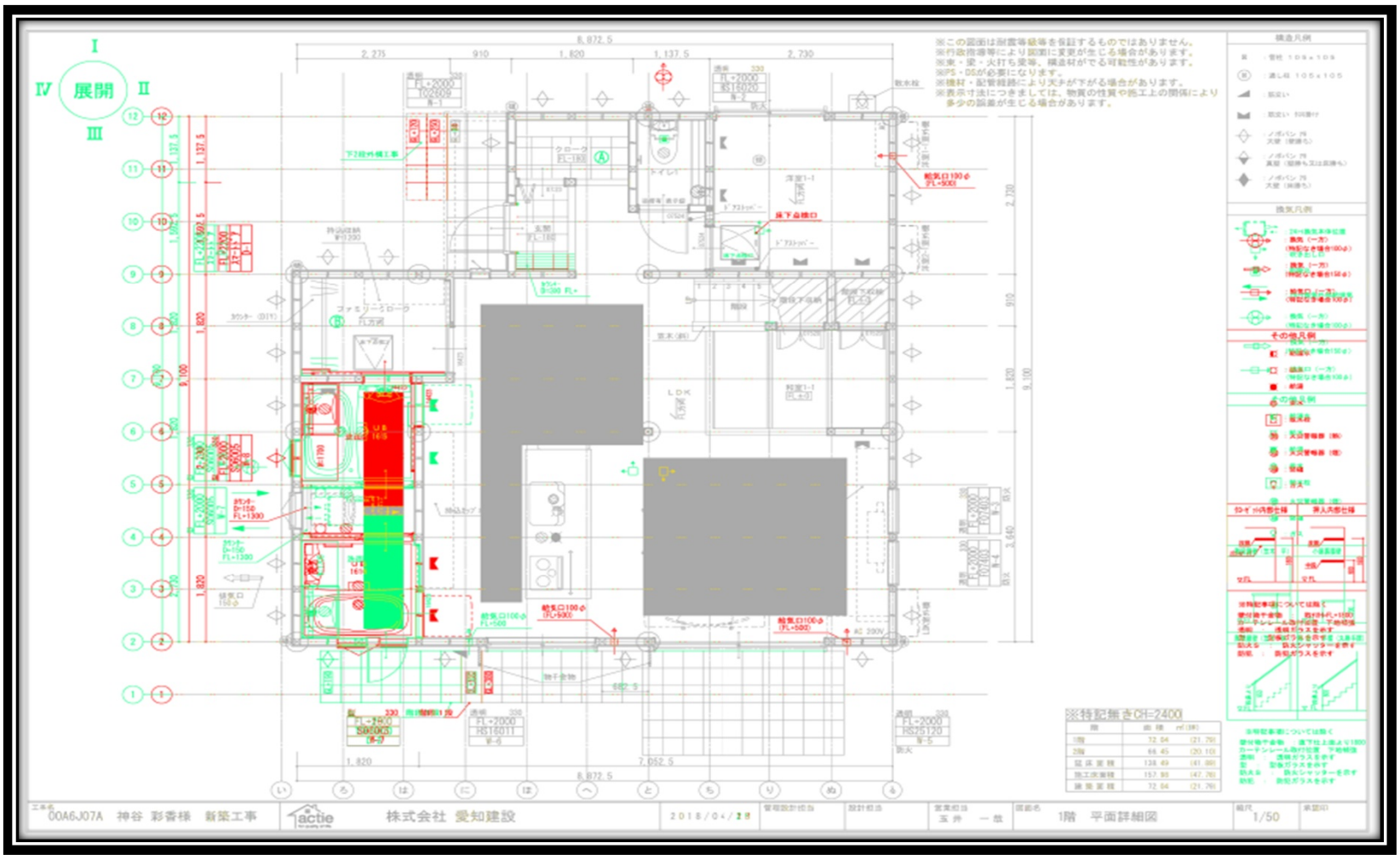

11. BRAVA Check Procedure

The color green of the brava pdf is indication that the certain area was deleted or change.

The color Red is indication that the certain area was corrected based on the request.

There are colors in the Brava that no need to worrry about
Like:

Gray means no changes

Yellow means line thinkness in the previous pdf and the latest is different but no need to change.

In checking brava printouts pdf check it by page and compare it to the request by page also so that we can able to see the items that change which is not requested to change or unintentional error.

If the changes is major, and the pdf is almost covered with color green,better to check the hard copy pdf of the plan.

Standard Procedure of Checking

12. Mistakes category

Rules:

All the mistakes committed by encoders,or every corrections,it is responsibility of the checkers to explain in the encoders why they commit the mistakes.
They should indicates the numbers of mistake by category.

*Not as requested

Simply not following the request from the architect
followed the request but the output is incorrect.

*Not in the Rules

These mistakes cover the affected by changes

*Overlap

Text/callouts/items or anything that overlaps from other item

*Translation Mistake

Mistakes that committed by the translation department.

*Previous mistake

Mistake that seen in the latest plan,not requested but need to correct because the previous encoder and checker did not notice.

Standard Procedure of Checking

Standard Procedure of Checking

Standard Procedure of Checking

Standard Procedure of Checking

Standard Procedure of Checking

Standard Procedure of Checking

Standard Procedure of Checking

Standard Procedure of Checking

Standard Procedure of Checking

Standard Procedure of Checking

Standard Procedure of Checking

Standard Procedure of Checking

Standard Procedure of Checking

Standard Procedure of Checking

Standard Procedure of Checking

Standard Procedure of Checking

Standard Procedure of Checking

Standard Procedure of Checking

Standard Procedure of Checking

Standard Procedure of Checking

Standard Procedure of Checking

Standard Procedure of Checking

Standard Procedure of Checking

Standard Procedure of Checking

Standard Procedure of Checking

Standard Procedure of Checking

Standard Procedure of Checking

Standard Procedure of Checking

Standard Procedure of Checking

Standard Procedure of Checking

Standard Procedure of Checking

Standard Procedure of Checking

Standard Procedure of Checking

Standard Procedure of Checking

Standard Procedure of Checking

Standard Procedure of Checking