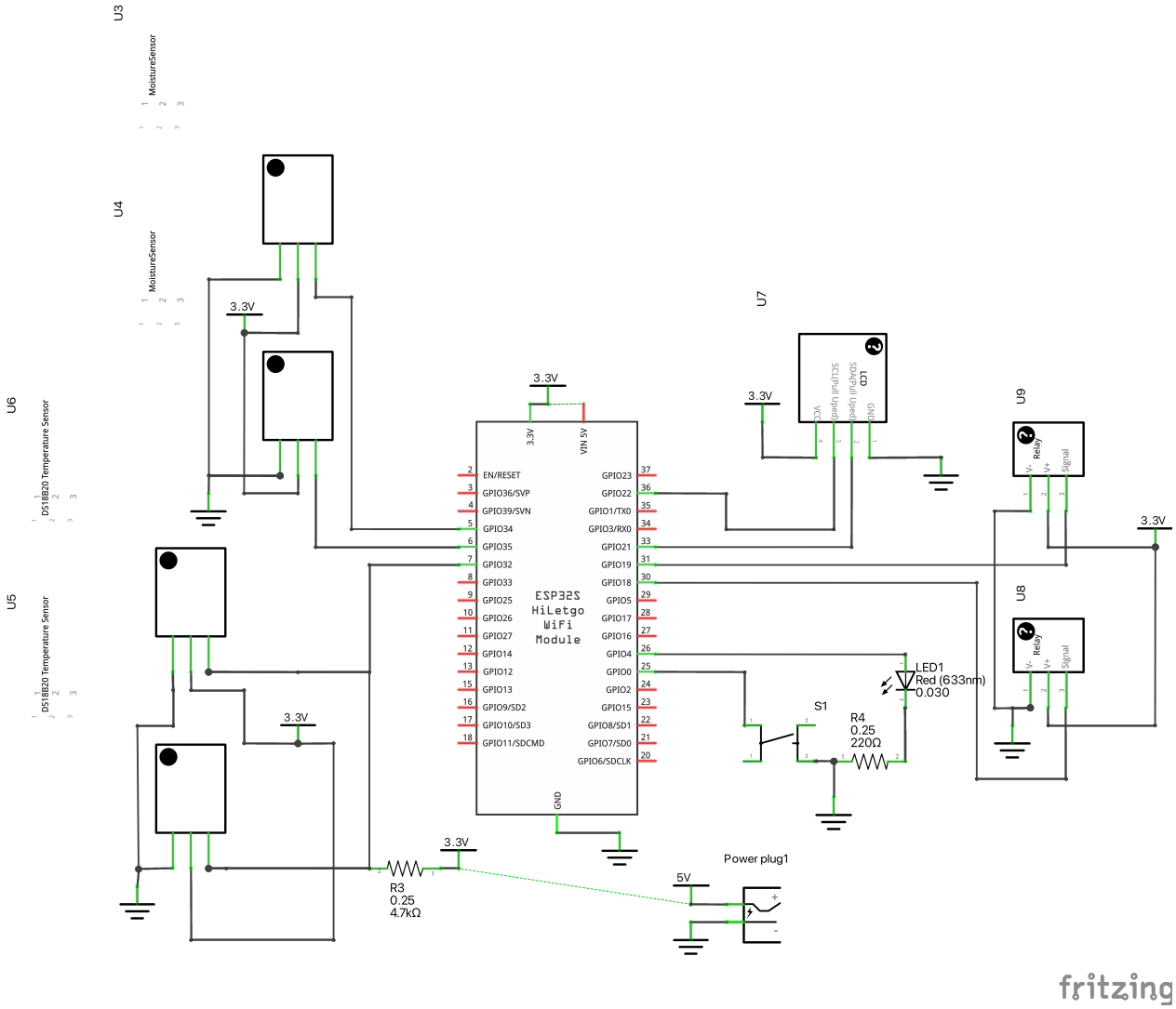
U3
MoistureSensor
U4
MoistureSensor
U6
DS18B20 Temperature Sensor
U5
DS18B20 Temperature Sensor
3.3V
3.3V
3.3V
3.3V
3.3V
3.3V
U7
LCD
VCC
SCL(Pull Up pad)
SDA(Pull Up pad)
GND
U9
Relay
V-
V+
Signal
U8
Relay
V-
V+
Signal
ESP32S
HiLetgo
WiFi
Module
EN/RESET
GPIO36/SVP
GPIO39/SVN
GPIO34
GPIO35
GPIO32
GPIO33
GPIO25
GPIO26
GPIO27
GPIO14
GPIO12
GPIO13
GPIO9/SD2
GPIO10/SD3
GPIO11/SDCMD
GPIO23
GPIO22
GPIO1/TX0
GPIO3/RX0
GPIO21
GPIO19
GPIO18
GPIO5
GPIO17
GPIO16
GPIO4
GPIO0
GPIO2
GPIO15
GPIO8/SD1
GPIO7/SD0
GPIO6/SDCLK
3.3V
VIN 5V
GND
LED1
Red (633nm)
0.030
S1
R4
0.25
220Ω
R3
0.25
4.7kΩ
5V
Power plug1
fritzing