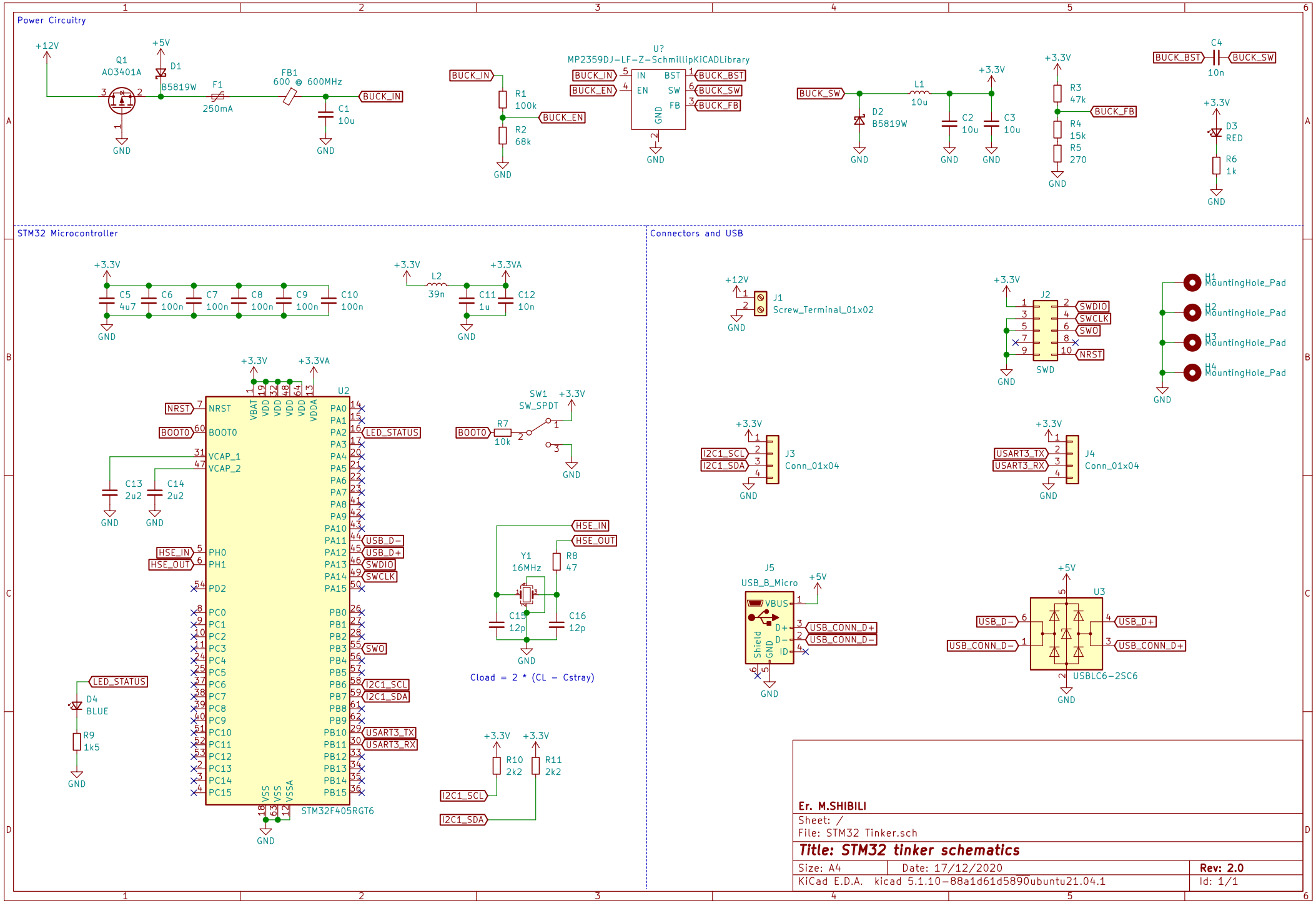
Power Circuitry
+12V
Q1
AO3401A
+5V
D1
B5819W
F1
250mA
FB1
600 @ 600MHz
BUCK_IN
C1
10u
GND
R1
100k
R2
68k
BUCK_EN
U?
MP2359DJ-LF-Z-SchmillipKiCADLibrary
IN
EN
BST
SW
FB
GND
BUCK_BST
BUCK_SW
BUCK_FB
L1
10u
D2
B5819W
C2
10u
C3
10u
+3.3V
R3
47k
R4
15k
R5
270
C4
10n
D3
RED
R6
1k
STM32 Microcontroller
C5
4u7
C6
100n
C7
100n
C8
100n
C9
100n
C10
100n
L2
39n
C11
1u
C12
10n
+3.3VA
U2
NRST
BOOT0
VCAP_1
VCAP_2
C13
2u2
C14
2u2
HSE_IN
HSE_OUT
PH0
PH1
PD2
LED_STATUS
USB_D-
USB_D+
SWDIO
SWCLK
SWO
I2C1_SCL
I2C1_SDA
USART3_TX
USART3_RX
VBAT
VDD
VDDA
VSS
VSSA
STM32F405RGT6
SW1
SW_SPDT
R7
10k
Y1
16MHz
R8
47
C15
12p
C16
12p
Cload = 2 * (CL - Cstray)
D4
BLUE
R9
1k5
R10
2k2
R11
2k2
Connectors and USB
J1
Screw_Terminal_01x02
J2
SWD
H1
MountingHole_Pad
H2
MountingHole_Pad
H3
MountingHole_Pad
H4
MountingHole_Pad
J3
Conn_01x04
J4
Conn_01x04
J5
USB_B_Micro
VBUS
D+
D-
ID
Shield
USB_CONN_D+
USB_CONN_D-
U3
USBLC6-2SC6
Er. M.SHIBILI
Sheet: /
File: STM32 Tinker.sch
Title: STM32 tinker schematics
Size: A4
Date: 17/12/2020
Rev: 2.0
KiCad E.D.A. kicad 5.1.10-88a1d61d5890ubuntu21.04.1
Id: 1/1