In [548…

```
# This cell is added by sphinx-gallery
%matplotlib inline
%pip install pennylane torch torchvision
```

```
Requirement already satisfied: pennylane in /home/msoliviawatt/machine_learn
ing/ml-env/lib/python3.13/site-packages (0.44.1)
Requirement already satisfied: torch in /home/msoliviawatt/machine_learning/
ml-env/lib/python3.13/site-packages (2.11.0)
Requirement already satisfied: torchvision in /home/msoliviawatt/machine_lea
rning/ml-env/lib/python3.13/site-packages (0.26.0)
Requirement already satisfied: scipy in /home/msoliviawatt/machine_learning/
ml-env/lib/python3.13/site-packages (from pennylane) (1.17.1)
Requirement already satisfied: networkx in /home/msoliviawatt/machine_learni
ng/ml-env/lib/python3.13/site-packages (from pennylane) (3.6.1)
Requirement already satisfied: rustworkx>=0.14.0 in /home/msoliviawatt/machi
ne_learning/ml-env/lib/python3.13/site-packages (from pennylane) (0.17.1)
Requirement already satisfied: autograd in /home/msoliviawatt/machine_learni
ng/ml-env/lib/python3.13/site-packages (from pennylane) (1.8.0)
Requirement already satisfied: appdirs in /home/msoliviawatt/machine_learnin
g/ml-env/lib/python3.13/site-packages (from pennylane) (1.4.4)
Requirement already satisfied: autoray==0.8.2 in /home/msoliviawatt/machine_
learning/ml-env/lib/python3.13/site-packages (from pennylane) (0.8.2)
Requirement already satisfied: cachetools in /home/msoliviawatt/machine_lear
ning/ml-env/lib/python3.13/site-packages (from pennylane) (7.0.5)
Requirement already satisfied: pennylane-lightning>=0.44 in /home/msoliviawa
tt/machine_learning/ml-env/lib/python3.13/site-packages (from pennylane) (0.
44.0)
Requirement already satisfied: requests in /home/msoliviawatt/machine_learni
ng/ml-env/lib/python3.13/site-packages (from pennylane) (2.32.5)
Requirement already satisfied: tomlkit in /home/msoliviawatt/machine_learnin
g/ml-env/lib/python3.13/site-packages (from pennylane) (0.14.0)
Requirement already satisfied: typing_extensions in /home/msoliviawatt/machi
ne_learning/ml-env/lib/python3.13/site-packages (from pennylane) (4.15.0)
Requirement already satisfied: packaging in /home/msoliviawatt/machine_learn
ing/ml-env/lib/python3.13/site-packages (from pennylane) (26.0)
Requirement already satisfied: diastatic-malt==2.15.2 in /home/msoliviawatt/
machine_learning/ml-env/lib/python3.13/site-packages (from pennylane) (2.15.
2)
Requirement already satisfied: gast in /home/msoliviawatt/machine_learning/m
l-env/lib/python3.13/site-packages (from pennylane) (0.7.0)
Requirement already satisfied: numpy in /home/msoliviawatt/machine_learning/
ml-env/lib/python3.13/site-packages (from pennylane) (2.4.2)
Requirement already satisfied: astunparse in /home/msoliviawatt/machine_lear
ning/ml-env/lib/python3.13/site-packages (from diastatic-malt==2.15.2->penny
lane) (1.6.3)
Requirement already satisfied: termcolor in /home/msoliviawatt/machine_learn
ing/ml-env/lib/python3.13/site-packages (from diastatic-malt==2.15.2->pennyl
ane) (3.3.0)
Requirement already satisfied: filelock in /home/msoliviawatt/machine_learni
ng/ml-env/lib/python3.13/site-packages (from torch) (3.25.2)
Requirement already satisfied: setuptools<82 in /home/msoliviawatt/machine_l
earning/ml-env/lib/python3.13/site-packages (from torch) (81.0.0)
Requirement already satisfied: sympy>=1.13.3 in /home/msoliviawatt/machine_l
earning/ml-env/lib/python3.13/site-packages (from torch) (1.14.0)
Requirement already satisfied: jinja2 in /home/msoliviawatt/machine_learnin
g/ml-env/lib/python3.13/site-packages (from torch) (3.1.6)
Requirement already satisfied: fsspec>=0.8.5 in /home/msoliviawatt/machine_l
earning/ml-env/lib/python3.13/site-packages (from torch) (2026.3.0)
Requirement already satisfied: cuda-toolkit==13.0.2 in /home/msoliviawatt/ma
chine_learning/ml-env/lib/python3.13/site-packages (from cuda-toolkit[cubla
```

```
s,cudart,cufft,cufile,cupti,curand,cusolver,cusparse,nvjitlink,nvrtc,nvtx]==
13.0.2; platform_system == "Linux"->torch) (13.0.2)
Requirement already satisfied: cuda-bindings<14,>=13.0.3 in /home/msoliviawa
tt/machine_learning/ml-env/lib/python3.13/site-packages (from torch) (13.2.
0)
Requirement already satisfied: nvidia-cudnn-cu13==9.19.0.56 in /home/msolivi
awatt/machine_learning/ml-env/lib/python3.13/site-packages (from torch) (9.1
9.0.56)
Requirement already satisfied: nvidia-cusparselt-cu13==0.8.0 in /home/msoliv
iawatt/machine_learning/ml-env/lib/python3.13/site-packages (from torch) (0.
8.0)
Requirement already satisfied: nvidia-nccl-cu13==2.28.9 in /home/msoliviawat
t/machine_learning/ml-env/lib/python3.13/site-packages (from torch) (2.28.9)
Requirement already satisfied: nvidia-nvshmem-cu13==3.4.5 in /home/msoliviaw
att/machine_learning/ml-env/lib/python3.13/site-packages (from torch) (3.4.
5)
Requirement already satisfied: triton==3.6.0 in /home/msoliviawatt/machine_l
earning/ml-env/lib/python3.13/site-packages (from torch) (3.6.0)
Requirement already satisfied: nvidia-cublas==13.1.0.3.* in /home/msoliviawa
tt/machine_learning/ml-env/lib/python3.13/site-packages (from cuda-toolkit[c
ublas,cudart,cufft,cufile,cupti,curand,cusolver,cusparse,nvjitlink,nvrtc,nvt
x]==13.0.2; platform_system == "Linux"->torch) (13.1.0.3)
Requirement already satisfied: nvidia-cuda-runtime==13.0.96.* in /home/msoli
viawatt/machine_learning/ml-env/lib/python3.13/site-packages (from cuda-tool
kit[cublas,cudart,cufft,cufile,cupti,curand,cusolver,cusparse,nvjitlink,nvrt
c,nvtx]==13.0.2; platform_system == "Linux"->torch) (13.0.96)
Requirement already satisfied: nvidia-cufft==12.0.0.61.* in /home/msoliviawa
tt/machine_learning/ml-env/lib/python3.13/site-packages (from cuda-toolkit[c
ublas,cudart,cufft,cufile,cupti,curand,cusolver,cusparse,nvjitlink,nvrtc,nvt
x]==13.0.2; platform_system == "Linux"->torch) (12.0.0.61)
Requirement already satisfied: nvidia-cufile==1.15.1.6.* in /home/msoliviawa
tt/machine_learning/ml-env/lib/python3.13/site-packages (from cuda-toolkit[c
ublas,cudart,cufft,cufile,cupti,curand,cusolver,cusparse,nvjitlink,nvrtc,nvt
x]==13.0.2; platform_system == "Linux"->torch) (1.15.1.6)
Requirement already satisfied: nvidia-cuda-cupti==13.0.85.* in /home/msolivi
awatt/machine_learning/ml-env/lib/python3.13/site-packages (from cuda-toolki
t[cublas,cudart,cufft,cufile,cupti,curand,cusolver,cusparse,nvjitlink,nvrtc,
nvtx]==13.0.2; platform_system == "Linux"->torch) (13.0.85)
Requirement already satisfied: nvidia-curand==10.4.0.35.* in /home/msoliviaw
att/machine_learning/ml-env/lib/python3.13/site-packages (from cuda-toolkit
[cublas,cudart,cufft,cufile,cupti,curand,cusolver,cusparse,nvjitlink,nvrtc,n
vtx]==13.0.2; platform_system == "Linux"->torch) (10.4.0.35)
Requirement already satisfied: nvidia-cusolver==12.0.4.66.* in /home/msolivi
awatt/machine_learning/ml-env/lib/python3.13/site-packages (from cuda-toolki
t[cublas,cudart,cufft,cufile,cupti,curand,cusolver,cusparse,nvjitlink,nvrtc,
nvtx]==13.0.2; platform_system == "Linux"->torch) (12.0.4.66)
Requirement already satisfied: nvidia-cusparse==12.6.3.3.* in /home/msolivia
watt/machine_learning/ml-env/lib/python3.13/site-packages (from cuda-toolkit
[cublas,cudart,cufft,cufile,cupti,curand,cusolver,cusparse,nvjitlink,nvrtc,n
vtx]==13.0.2; platform_system == "Linux"->torch) (12.6.3.3)
Requirement already satisfied: nvidia-nvjitlink==13.0.88.* in /home/msolivia
watt/machine_learning/ml-env/lib/python3.13/site-packages (from cuda-toolkit
[cublas,cudart,cufft,cufile,cupti,curand,cusolver,cusparse,nvjitlink,nvrtc,n
vtx]==13.0.2; platform_system == "Linux"->torch) (13.0.88)
Requirement already satisfied: nvidia-cuda-nvrtc==13.0.88.* in /home/msolivi
awatt/machine_learning/ml-env/lib/python3.13/site-packages (from cuda-toolki
```

```
t[cublas,cudart,cufft,cufile,cupti,curand,cusolver,cusparse,nvjitlink,nvrtc,
nvtx]==13.0.2; platform_system == "Linux"->torch) (13.0.88)
Requirement already satisfied: nvidia-nvtx==13.0.85.* in /home/msoliviawatt/
machine_learning/ml-env/lib/python3.13/site-packages (from cuda-toolkit[cubl
as,cudart,cufft,cufile,cupti,curand,cusolver,cusparse,nvjitlink,nvrtc,nvtx]=
=13.0.2; platform_system == "Linux"->torch) (13.0.85)
Requirement already satisfied: cuda-pathfinder~=1.1 in /home/msoliviawatt/ma
chine_learning/ml-env/lib/python3.13/site-packages (from cuda-bindings<14,>=
13.0.3->torch) (1.5.1)
Requirement already satisfied: pillow!=8.3.*,>=5.3.0 in /home/msoliviawatt/m
achine_learning/ml-env/lib/python3.13/site-packages (from torchvision) (12.
1.1)
Requirement already satisfied: scipy-openblas32>=0.3.26 in /home/msoliviawat
t/machine_learning/ml-env/lib/python3.13/site-packages (from pennylane-light
ning>=0.44->pennylane) (0.3.31.188.0)
Requirement already satisfied: mpmath<1.4,>=1.1.0 in /home/msoliviawatt/mach
ine_learning/ml-env/lib/python3.13/site-packages (from sympy>=1.13.3->torch)
(1.3.0)
Requirement already satisfied: wheel<1.0,>=0.23.0 in /home/msoliviawatt/mach
ine_learning/ml-env/lib/python3.13/site-packages (from astunparse->diastatic
-malt==2.15.2->pennylane) (0.46.3)
Requirement already satisfied: six<2.0,>=1.6.1 in /home/msoliviawatt/machine
_learning/ml-env/lib/python3.13/site-packages (from astunparse->diastatic-ma
lt==2.15.2->pennylane) (1.17.0)
Requirement already satisfied: MarkupSafe>=2.0 in /home/msoliviawatt/machine
_learning/ml-env/lib/python3.13/site-packages (from jinja2->torch) (3.0.3)
Requirement already satisfied: charset_normalizer<4,>=2 in /home/msoliviawat
t/machine_learning/ml-env/lib/python3.13/site-packages (from requests->penny
lane) (3.4.4)
Requirement already satisfied: idna<4,>=2.5 in /home/msoliviawatt/machine_le
arning/ml-env/lib/python3.13/site-packages (from requests->pennylane) (3.11)
Requirement already satisfied: urllib3<3,>=1.21.1 in /home/msoliviawatt/mach
ine_learning/ml-env/lib/python3.13/site-packages (from requests->pennylane)
(2.6.3)
Requirement already satisfied: certifi>=2017.4.17 in /home/msoliviawatt/mach
ine_learning/ml-env/lib/python3.13/site-packages (from requests->pennylane)
(2026.1.4)
Note: you may need to restart the kernel to use updated packages.
```

Quanvolutional Neural Networks {#quanvolution}

> > Warning
>
> This demo uses TensorFlow, which is a deprecated interface with PennyLane v0.42. Interfacing with TensorFlow will no longer be supported with PennyLane v0.43 and higher. Consider switching to a different machine learning interface with PennyLane, like PyTorch or JAX.

In this demo we implement the *Quanvolutional Neural Network*, a quantum machine learning model originally introduced in Henderson et al. (2019).

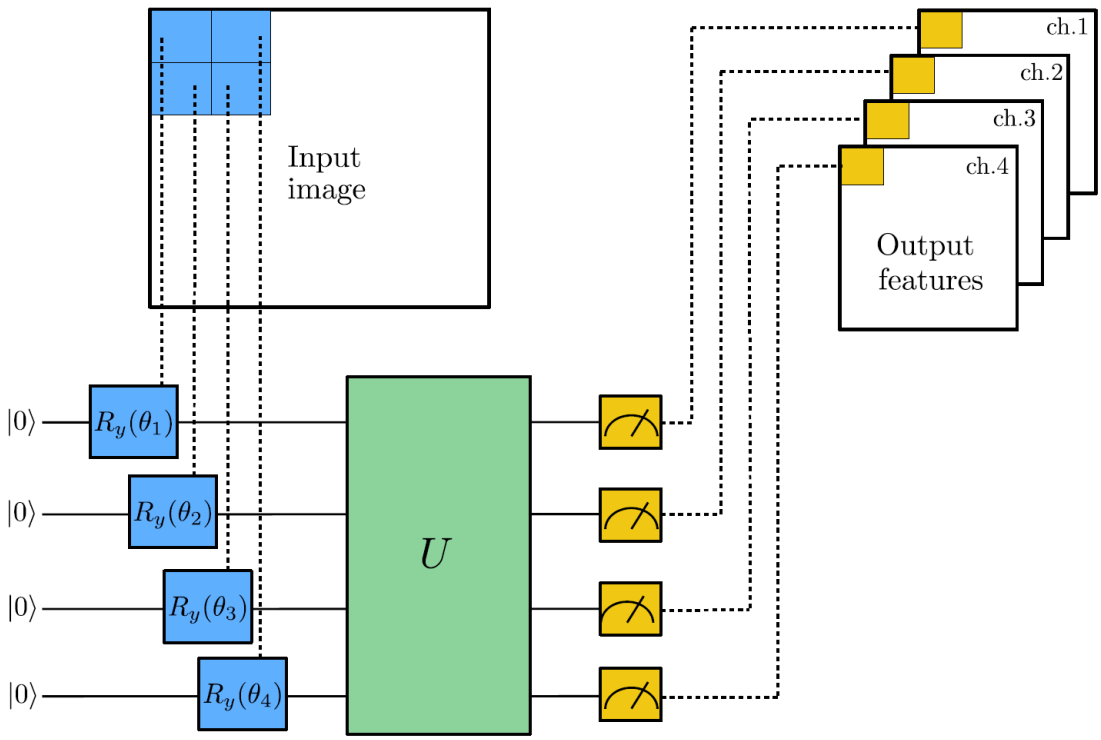

Introduction

Classical convolution

The *convolutional neural network* (CNN) is a standard model in classical machine learning which is particularly suitable for processing images. The model is based on the idea of a *convolution layer* where, instead of processing the full input data with a global function, a local convolution is applied.

If the input is an image, small local regions are sequentially processed with the same kernel. The results obtained for each region are usually associated to different channels of a single output pixel. The union of all the output pixels produces a new image-like object, which can be further processed by additional layers.

Quantum convolution

One can extend the same idea also to the context of quantum variational circuits. A possible approach is given by the following procedure which is very similar to the one used in Ref. [1]. The scheme is also represented in the figure at the top of this tutorial.

1. A small region of the input image, in our example a 2×2 square, is embedded into a quantum circuit. In this demo, this is achieved with parametrized rotations applied to the qubits initialized in the ground state.
2. A quantum computation, associated to a unitary U, is performed on the system. The unitary could be generated by a variational quantum circuit or, more simply, by a random circuit as proposed in Ref. [1].
3. The quantum system is finally measured, obtaining a list of classical expectation values. The measurement results could also be classically post-processed as proposed in Ref. [1] but, for simplicity, in this demo we directly use the raw expectation values.
4. Analogously to a classical convolution layer, each expectation value is mapped to a different channel of a single output pixel.
5. Iterating the same procedure over different regions, one can scan the full input image, producing an output object which will be structured as a multi-channel image.
6. The quantum convolution can be followed by further quantum layers or by classical layers.

The main difference with respect to a classical convolution is that a quantum circuit can generate highly complex kernels whose computation could be, at least in principle, classically intractable.

General setup

This Python code requires *PennyLane* with the *TensorFlow* interface and the plotting library *matplotlib*.

In [549…

```
import pennylane as qml
from pennylane import numpy as np
from pennylane.templates import RandomLayers
import matplotlib.pyplot as plt

# removed tensorflow and added pytorch stuff
import torch
import torch.nn as nn
import torch.optim as optim
from torch.utils.data import DataLoader, TensorDataset

import os
```

Setting of the main hyper-parameters of the model

In [550…

```
# macros
NUM_EPOCHS = 50
```

```
NUM_LAYERS = 1

NUM_CLASSES = 10
SAMPLES_PER_CLASS_TRAIN = 40
SAMPLES_PER_CLASS_TEST = 15

NUM_TRAIN = NUM_CLASSES * SAMPLES_PER_CLASS_TRAIN
NUM_TEST = NUM_CLASSES * SAMPLES_PER_CLASS_TEST

LEARNING_RATE = 0.001
BATCH_SIZE = 32
SQUARE_SIZE = 128
WEIGHT_DECAY = 1e-4

VISUAL_SCORE_RUN = False

# change this to whatever path of data you want to use
SAVE_PATH = f"./quanv_data/aug_size_{SQUARE_SIZE}_classes_{NUM_CLASSES}_norm

os.makedirs(SAVE_PATH, exist_ok=True)

# set this to true if your system does not have the preprocessed dataset dow
PREPROCESS = True

np.random.seed(0)
```

Loading of the Stanford Cars dataset

In [551…

```
from torchvision.datasets import StanfordCars
from torchvision import transforms
from torch.utils.data import Dataset, Subset, random_split, DataLoader
import torch

test_transform = transforms.Compose([
    transforms.Grayscale(num_output_channels=1),
    transforms.Resize((SQUARE_SIZE, SQUARE_SIZE)),
    transforms.ToTensor(),
    transforms.Normalize(mean=[0.5], std=[0.5]) # normalization for grayscal
])

train_transform = transforms.Compose([
    transforms.Grayscale(num_output_channels=1),
    transforms.Resize((SQUARE_SIZE, SQUARE_SIZE)),

    transforms.RandomHorizontalFlip(),
    transforms.RandomRotation(10),
    transforms.ColorJitter(brightness=0.1, contrast=0.1),

    transforms.ToTensor(),
    transforms.Normalize(mean=[0.5], std=[0.5])
])

full_data_train = StanfordCars(
    root="./data",
```

```
    split="train",
    download=False,
    transform=train_transform
)

full_data_test = StanfordCars(
    root="./data",
    split="train",
    download=False,
    transform=test_transform
)

print(len(full_data_train.classes))
```

196

In [552…

```
# finding the most visually distinct classes
from collections import defaultdict

def class_prototypes(dataset, selected_classes):
    images_by_class = defaultdict(list)

    for img, label in dataset:
        if label in selected_classes:
            img = img.numpy() # [1, H, W]
            images_by_class[label].append(img)

    prototypes = {}

    for label, imgs in images_by_class.items():
        prototypes[label] = np.mean(imgs, axis=0)

    return prototypes

def visual_distinctiveness_scores(prototypes):
    scores = {}

    labels = list(prototypes.keys())

    for label in labels:
        distances = []

        for other in labels:
            if label == other:
                continue

            dist = np.mean(np.abs(prototypes[label] - prototypes[other]))
            distances.append(dist)

        scores[label] = np.mean(distances)

    return scores


if(VISUAL_SCORE_RUN):
    selected_classes = list(range(len(full_data_train.classes)))
```

```
    prototypes = class_prototypes(full_data_train, selected_classes)
    scores = visual_distinctiveness_scores(prototypes)

    for label, score in sorted(scores.items(), key=lambda x: x[1], reverse=T
        print(f"{label:3d} | {score:.4f} | {full_data_train.classes[label]}"
```

In [554…

```
# class selection
if(NUM_CLASSES == 3):
    selected_class_names = [
        "Chevrolet Corvette Ron Fellows Edition Z06 2007",
        "Bugatti Veyron 16.4 Convertible 2009",
        "FIAT 500 Convertible 2012"
    ]
elif(NUM_CLASSES == 10):
    selected_class_names = [
        "Chevrolet Corvette Ron Fellows Edition Z06 2007",
        "Bugatti Veyron 16.4 Convertible 2009",
        "FIAT 500 Convertible 2012",
        "Lamborghini Diablo Coupe 2001",
        "Maybach Landaulet Convertible 2012",
        "Spyker C8 Convertible 2009",
        "Chevrolet TrailBlazer SS 2009",
        "Ford Ranger SuperCab 2011",
        "Hyundai Azera Sedan 2012",
        "Audi TT RS Coupe 2012",
    ]
else:
    selected_classes = list(range(NUM_CLASSES))

selected_classes = [
    full_data_test.classes.index(name)
    for name in selected_class_names
]

for idx in selected_classes:
    print(full_data_test.classes[idx])
```

```
Chevrolet Corvette Ron Fellows Edition Z06 2007
Bugatti Veyron 16.4 Convertible 2009
FIAT 500 Convertible 2012
Lamborghini Diablo Coupe 2001
Maybach Landaulet Convertible 2012
Spyker C8 Convertible 2009
Chevrolet TrailBlazer SS 2009
Ford Ranger SuperCab 2011
Hyundai Azera Sedan 2012
Audi TT RS Coupe 2012
```

In [555…

```
# manually splitting the data
selected_indices = [
    i for i, (_, label) in enumerate(full_data_test._samples)
    if label in selected_classes
]

filtered_train_data = Subset(full_data_train, selected_indices)
filtered_test_data = Subset(full_data_test, selected_indices)
```

```
class_map = {old_label: new_label for new_label, old_label in enumerate(sele

class RemappedSubset(Dataset):
    def __init__(self, subset, class_map):
        self.subset = subset
        self.class_map = class_map

    def __len__(self):
        return len(self.subset)

    def __getitem__(self, idx):
        image, label = self.subset[idx]
        return image, self.class_map[label]

remapped_train_data = RemappedSubset(filtered_train_data, class_map)
remapped_test_data = RemappedSubset(filtered_test_data, class_map)

total_size = len(remapped_train_data)
train_size = int(0.8 * total_size)
val_size = total_size - train_size

generator = torch.Generator().manual_seed(42)

train_indices, val_indices = random_split(
    range(total_size),
    [train_size, val_size],
    generator=generator
)

train_subset = Subset(remapped_train_data, train_indices.indices)
val_subset = Subset(remapped_test_data, val_indices.indices)
```

Quantum circuit as a convolution kernel

We follow the scheme described in the introduction and represented in the figure at the top of this demo.

We initialize a PennyLane `default.qubit` device, simulating a system of 4 qubits. The associated `qnode` represents the quantum circuit consisting of:

1. an embedding layer of local R_y rotations (with angles scaled by a factor of π);
2. a random circuit of `NUM_LAYERS` ;
3. a final measurement in the computational basis, estimating 4 expectation values.

In [556…

```
dev = qml.device("default.qubit", wires=4)
# Random circuit parameters
```

```
rand_params = np.random.uniform(high=2 * np.pi, size=(NUM_LAYERS, 4))

@qml.qnode(dev)
def circuit(phi):
    # Encoding of 4 classical input values
    for j in range(4):
        qml.RY(np.pi * phi[j], wires=j)

    # Random quantum circuit
    RandomLayers(rand_params, wires=list(range(4)))

    # Measurement producing 4 classical output values
    return [qml.expval(qml.PauliZ(j)) for j in range(4)]
```

The next function defines the convolution scheme:

1. the image is divided into squares of 2×2 pixels;
2. each square is processed by the quantum circuit;
3. the 4 expectation values are mapped into 4 different channels of a single output pixel.

> > Note
>
> This process halves the resolution of the input image. In the standard language of CNN, this would correspond to a convolution with a 2×2 *kernel* and a *stride* equal to 2.

In [557…

```
def quanv(image):
    h, w, c = image.shape
    out = np.zeros((h // 2, w // 2, 4))

    for j in range(0, h - 1, 2):
        for k in range(0, w - 1, 2):
            q_results = circuit([
                image[j, k, 0],
                image[j, k + 1, 0],
                image[j + 1, k, 0],
                image[j + 1, k + 1, 0]
            ])

            for ch in range(4):
                out[j // 2, k // 2, ch] = q_results[ch]

    return out
```

In [558…

```
# NUM_TRAIN = 200
# NUM_TEST = 80
train_subset_small = Subset(train_subset, range(min(NUM_TRAIN, len(train_sub
val_subset_small = Subset(val_subset, range(min(NUM_TEST, len(val_subset))))

def dataset_to_numpy(dataset):
    images = []
    labels = []
```

```
    for img, label in dataset:
        # img is [C, H, W], but PennyLane tutorial expects [H, W, C]
        img_np = img.permute(1, 2, 0).numpy()
        images.append(img_np)
        labels.append(label)

    images = np.array(images)
    labels = np.array(labels)

    return images, labels

train_images, train_labels = dataset_to_numpy(train_subset_small)
test_images, test_labels = dataset_to_numpy(val_subset_small)

print("train_images shape: ", train_images.shape)
print("train_labels shape: ", train_labels.shape)
print("test_images shape: ", test_images.shape)
print("test_labels shape: ", test_labels.shape)
print("Unique train labels: ", np.unique(train_labels))
print("Unique test labels: ", np.unique(test_labels))
```

```
train_images shape:  (310, 128, 128, 1)
train_labels shape:  (310,)
test_images shape:  (78, 128, 128, 1)
test_labels shape:  (78,)
Unique train labels:  [0 1 2 3 4 5 6 7 8 9]
Unique test labels:  [0 1 2 3 4 5 6 7 8 9]
```

Quantum pre-processing of the dataset

Since we are not going to train the quantum convolution layer, it is more efficient to apply it as a "pre-processing" layer to all the images of our dataset. Later an entirely classical model will be directly trained and tested on the pre-processed dataset, avoiding unnecessary repetitions of quantum computations.

The pre-processed images will be saved in the folder `SAVE_PATH`. Once saved, they can be directly loaded by setting `PREPROCESS = False`, otherwise the quantum convolution is evaluated at each run of the code.

In [559…

```
if PREPROCESS == True:
    q_train_images = []
    print("Quantum pre-processing of train images:")
    for idx, img in enumerate(train_images):
        print("{}/{}        ".format(idx + 1, NUM_TRAIN), end="\r")
        q_train_images.append(quanv(img))
    q_train_images = np.asarray(q_train_images)

    q_test_images = []
    print("\nQuantum pre-processing of test images:")
    for idx, img in enumerate(test_images):
        print("{}/{}        ".format(idx + 1, NUM_TEST), end="\r")
```

```
        q_test_images.append(quanv(img))
    q_test_images = np.asarray(q_test_images)

    # Save pre-processed images
    np.save(SAVE_PATH + "q_train_images.npy", q_train_images)
    np.save(SAVE_PATH + "q_test_images.npy", q_test_images)


# Load pre-processed images
q_train_images = np.load(SAVE_PATH + "q_train_images.npy")
q_test_images = np.load(SAVE_PATH + "q_test_images.npy")
```

```
Quantum pre-processing of train images:
310/400
Quantum pre-processing of test images:
78/150
```

In [560…

```
q_train_images = torch.tensor(q_train_images, dtype=torch.float32)
q_test_images = torch.tensor(q_test_images, dtype=torch.float32)

train_images = torch.tensor(train_images, dtype=torch.float32)
test_images = torch.tensor(test_images, dtype=torch.float32)

train_labels = torch.tensor(train_labels, dtype=torch.long)
test_labels = torch.tensor(test_labels, dtype=torch.long)
```

Let us visualize the effect of the quantum convolution layer on a batch of samples:

In [561…

```
n_samples = 4
n_channels = 4
fig, axes = plt.subplots(1 + n_channels, n_samples, figsize=(10, 10))
for k in range(n_samples):
    axes[0, 0].set_ylabel("Input")
    if k != 0:
        axes[0, k].yaxis.set_visible(False)
    axes[0, k].imshow(train_images[k, :, :, 0], cmap="gray")

    # Plot all output channels
    for c in range(n_channels):
        axes[c + 1, 0].set_ylabel("Output [ch. {}]".format(c))
        if k != 0:
            axes[c, k].yaxis.set_visible(False)
        axes[c + 1, k].imshow(q_train_images[k, :, :, c], cmap="gray")

plt.tight_layout()
plt.show()
```

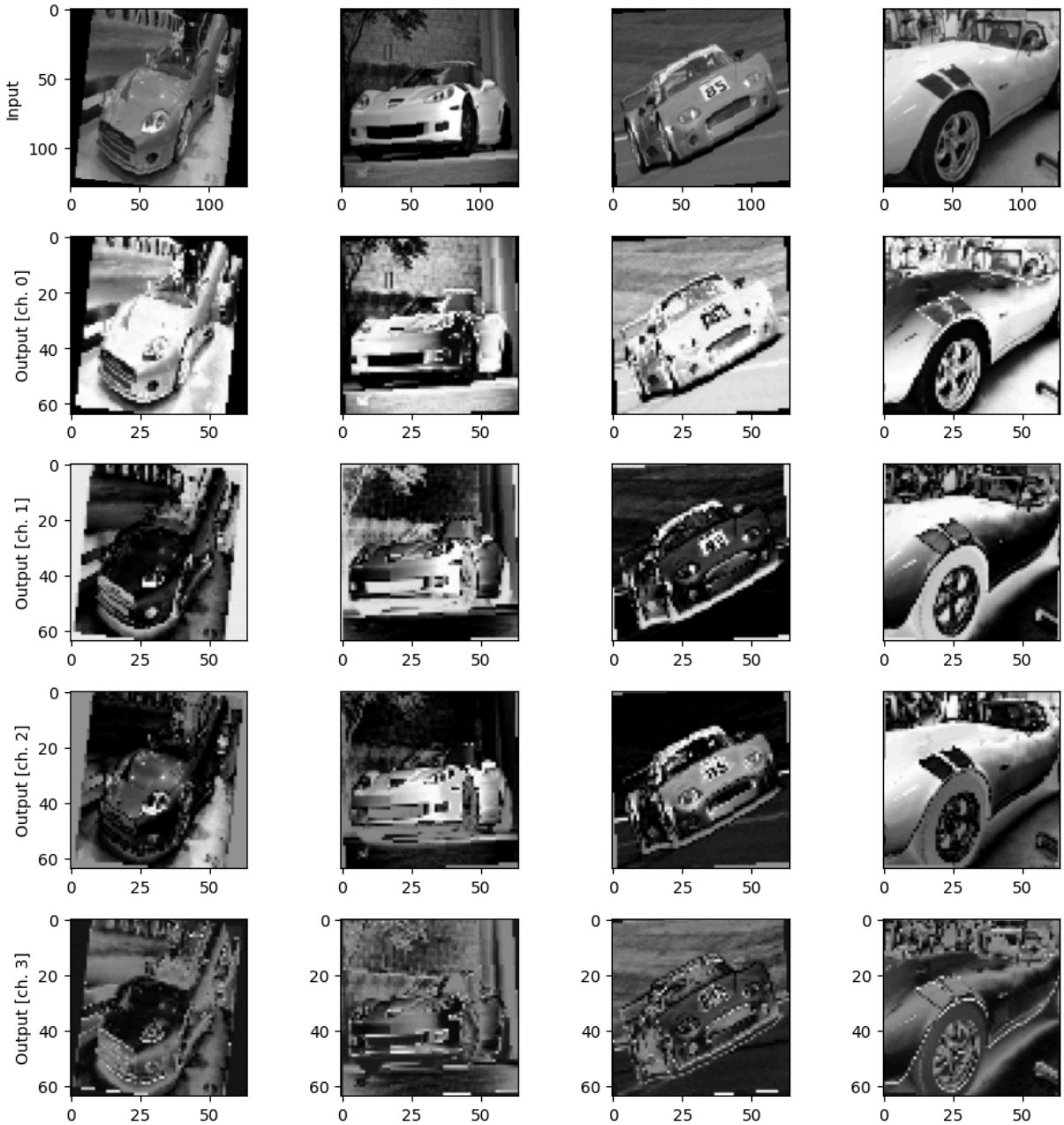

Below each input image, the 4 output channels generated by the quantum convolution are visualized in gray scale.

One can clearly notice the downsampling of the resolution and some local distortion introduced by the quantum kernel. On the other hand the global shape of the image is preserved, as expected for a convolution layer.

Hybrid quantum-classical model

After the application of the quantum convolution layer we feed the resulting features into a classical neural network that will be trained to classify the 10 different digits of the Stanford cars dataset.

We use a very simple model: just a fully connected layer with 10 output nodes with a final *softmax* activation function.

The model is compiled with a *stochastic-gradient-descent* optimizer, and a *cross-entropy* loss function.

In [562…

```
class MyModel(nn.Module):
    def __init__(self, input_shape, num_classes=10):
        super().__init__()
        self.flatten = nn.Flatten()
        self.net = nn.Sequential(
            nn.Linear(input_shape, 128),
            nn.ReLU(),
            nn.Linear(128, num_classes)
        )

    def forward(self, x):
        x = self.flatten(x)
        return self.net(x)
```

Training

We first initialize an instance of the model, then we train and validate it with the dataset that has been already pre-processed by a quantum convolution.

In [563…

```
def evaluate(model, images, labels, loss_fn):
    model.eval()
    with torch.no_grad():
        outputs = model(images)
        loss = loss_fn(outputs, labels)

        preds = torch.argmax(outputs, dim=1)
        acc = (preds == labels).float().mean().item()

    return acc, loss.item()
```

In [564…

```
def train_model(model, train_images, train_labels,
                val_images, val_labels, epochs):

    optimizer = torch.optim.Adam(model.parameters(), lr=LEARNING_RATE, weigh
    loss_fn = torch.nn.CrossEntropyLoss()

    train_history = []
    val_history = []

    train_loss_history = []
    val_loss_history = []

    for epoch in range(epochs):
        model.train()
```

```
        outputs = model(train_images)
        loss = loss_fn(outputs, train_labels)
        train_loss_history.append(loss.item())

        optimizer.zero_grad()
        loss.backward()
        optimizer.step()

        # training accuracy
        train_preds = torch.argmax(outputs, dim=1)
        train_acc = (train_preds == train_labels).float().mean().item()

        # validation accuracy
        val_acc, val_loss = evaluate(model, val_images, val_labels, loss_fn)
        val_loss_history.append(val_loss)

        train_history.append(train_acc)
        val_history.append(val_acc)

        print(f"Epoch {epoch+1}: train={train_acc:.4f}, val={val_acc:.4f}")

    return train_history, val_history, train_loss_history, val_loss_history
```

In [565…

```
input_size = q_train_images.shape[1] * q_train_images.shape[2] * q_train_ima

q_model = MyModel(input_size)

# q_history = train_model(q_model, q_train_images, train_labels, epochs = NU

q_train_hist, q_val_hist, q_train_loss_hist, q_val_loss_hist = train_model(
    q_model,
    q_train_images, train_labels,
    q_test_images, test_labels,
    epochs=NUM_EPOCHS
)
```

```
Epoch 1: train=0.0774, val=0.1667
Epoch 2: train=0.3839, val=0.2564
Epoch 3: train=0.5484, val=0.3077
Epoch 4: train=0.7484, val=0.2949
Epoch 5: train=0.8613, val=0.2308
Epoch 6: train=0.9129, val=0.2436
Epoch 7: train=0.9774, val=0.2821
Epoch 8: train=1.0000, val=0.3333
Epoch 9: train=0.9968, val=0.3205
Epoch 10: train=0.9968, val=0.3462
Epoch 11: train=1.0000, val=0.3333
Epoch 12: train=1.0000, val=0.2949
Epoch 13: train=1.0000, val=0.2949
Epoch 14: train=1.0000, val=0.3077
Epoch 15: train=1.0000, val=0.2692
Epoch 16: train=1.0000, val=0.2821
Epoch 17: train=1.0000, val=0.2821
Epoch 18: train=1.0000, val=0.3077
Epoch 19: train=1.0000, val=0.3077
Epoch 20: train=1.0000, val=0.2821
Epoch 21: train=1.0000, val=0.2692
Epoch 22: train=1.0000, val=0.2692
Epoch 23: train=1.0000, val=0.2692
Epoch 24: train=1.0000, val=0.2692
Epoch 25: train=1.0000, val=0.2692
Epoch 26: train=1.0000, val=0.2692
Epoch 27: train=1.0000, val=0.2821
Epoch 28: train=1.0000, val=0.2821
Epoch 29: train=1.0000, val=0.2821
Epoch 30: train=1.0000, val=0.2821
Epoch 31: train=1.0000, val=0.2821
Epoch 32: train=1.0000, val=0.2821
Epoch 33: train=1.0000, val=0.2821
Epoch 34: train=1.0000, val=0.2821
Epoch 35: train=1.0000, val=0.2821
Epoch 36: train=1.0000, val=0.2821
Epoch 37: train=1.0000, val=0.2821
Epoch 38: train=1.0000, val=0.2949
Epoch 39: train=1.0000, val=0.2949
Epoch 40: train=1.0000, val=0.2949
Epoch 41: train=1.0000, val=0.2949
Epoch 42: train=1.0000, val=0.2949
Epoch 43: train=1.0000, val=0.2949
Epoch 44: train=1.0000, val=0.2949
Epoch 45: train=1.0000, val=0.2949
Epoch 46: train=1.0000, val=0.2949
Epoch 47: train=1.0000, val=0.2949
Epoch 48: train=1.0000, val=0.2949
Epoch 49: train=1.0000, val=0.2949
Epoch 50: train=1.0000, val=0.2949
```

In order to compare the results achievable with and without the quantum convolution layer, we initialize also a "classical" instance of the model that will be directly trained and validated with the raw car images (i.e., without quantum pre-processing).

In [566…

```
input_size = train_images.shape[1] * train_images.shape[2] * train_images.sh

c_model = MyModel(input_size)

# c_history = train_model(c_model, train_images, train_labels, epochs = NUM_
c_train_hist, c_val_hist, c_train_loss_hist, c_val_loss_hist = train_model(
    c_model,
    train_images, train_labels,
    test_images, test_labels,
    epochs=NUM_EPOCHS
)
```

```
Epoch 1: train=0.0742, val=0.2564
Epoch 2: train=0.3065, val=0.2308
Epoch 3: train=0.3452, val=0.2308
Epoch 4: train=0.4839, val=0.2436
Epoch 5: train=0.5258, val=0.1923
Epoch 6: train=0.5484, val=0.1923
Epoch 7: train=0.6065, val=0.2564
Epoch 8: train=0.6903, val=0.2692
Epoch 9: train=0.7677, val=0.3077
Epoch 10: train=0.7935, val=0.2692
Epoch 11: train=0.8452, val=0.2949
Epoch 12: train=0.8871, val=0.2436
Epoch 13: train=0.8742, val=0.2564
Epoch 14: train=0.9065, val=0.2692
Epoch 15: train=0.9387, val=0.2692
Epoch 16: train=0.9452, val=0.2692
Epoch 17: train=0.9613, val=0.2564
Epoch 18: train=0.9839, val=0.2308
Epoch 19: train=0.9839, val=0.2308
Epoch 20: train=0.9871, val=0.2436
Epoch 21: train=0.9935, val=0.2564
Epoch 22: train=0.9968, val=0.2692
Epoch 23: train=1.0000, val=0.2308
Epoch 24: train=1.0000, val=0.2308
Epoch 25: train=1.0000, val=0.2308
Epoch 26: train=1.0000, val=0.2179
Epoch 27: train=1.0000, val=0.2179
Epoch 28: train=1.0000, val=0.2179
Epoch 29: train=1.0000, val=0.2179
Epoch 30: train=1.0000, val=0.2308
Epoch 31: train=1.0000, val=0.2308
Epoch 32: train=1.0000, val=0.2308
Epoch 33: train=1.0000, val=0.2308
Epoch 34: train=1.0000, val=0.2308
Epoch 35: train=1.0000, val=0.2308
Epoch 36: train=1.0000, val=0.2308
Epoch 37: train=1.0000, val=0.2308
Epoch 38: train=1.0000, val=0.2308
Epoch 39: train=1.0000, val=0.2308
Epoch 40: train=1.0000, val=0.2179
Epoch 41: train=1.0000, val=0.2179
Epoch 42: train=1.0000, val=0.2308
Epoch 43: train=1.0000, val=0.2308
Epoch 44: train=1.0000, val=0.2308
Epoch 45: train=1.0000, val=0.2308
Epoch 46: train=1.0000, val=0.2308
Epoch 47: train=1.0000, val=0.2308
Epoch 48: train=1.0000, val=0.2308
Epoch 49: train=1.0000, val=0.2308
Epoch 50: train=1.0000, val=0.2308
```

Results

In [567…

```
plt.figure(figsize=(10, 6))
plt.plot(q_train_hist, label="Classical Train Accuracy", linewidth=2)
plt.plot(c_train_hist, label="Quantum Train Accuracy", linewidth=2)

plt.title(f"HQNN Train Accuracy Comparison with {NUM_CLASSES} Classes")
plt.xlabel("Epoch")
plt.ylabel("Train Accuracy")
plt.legend()
plt.grid(True, alpha=0.3)
plt.tight_layout()
plt.show()
```

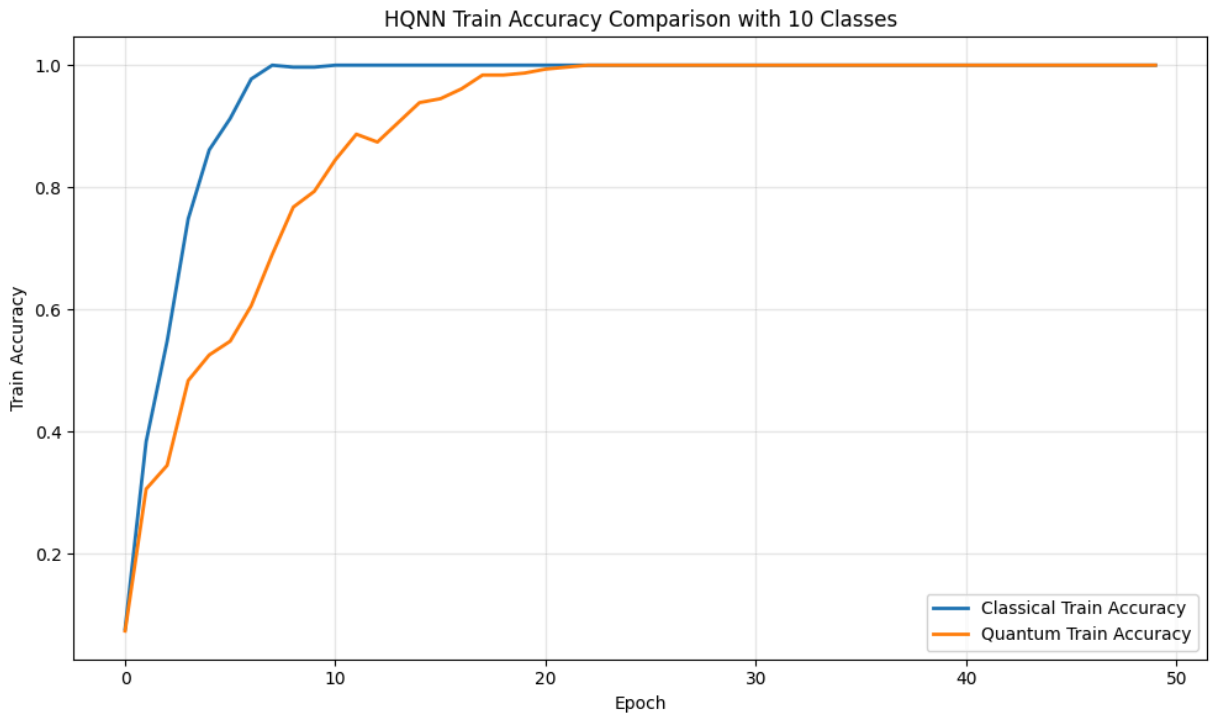

In [568…

```
plt.figure(figsize=(10, 6))
plt.plot(q_train_loss_hist, label="Quantum Train Loss")
plt.plot(c_train_loss_hist, label="Classical Train Loss")

plt.xlabel("Epoch")
plt.ylabel("Loss")
plt.legend()
plt.title(f"HQNN Training Loss with {NUM_CLASSES} Classes")

plt.show()
```

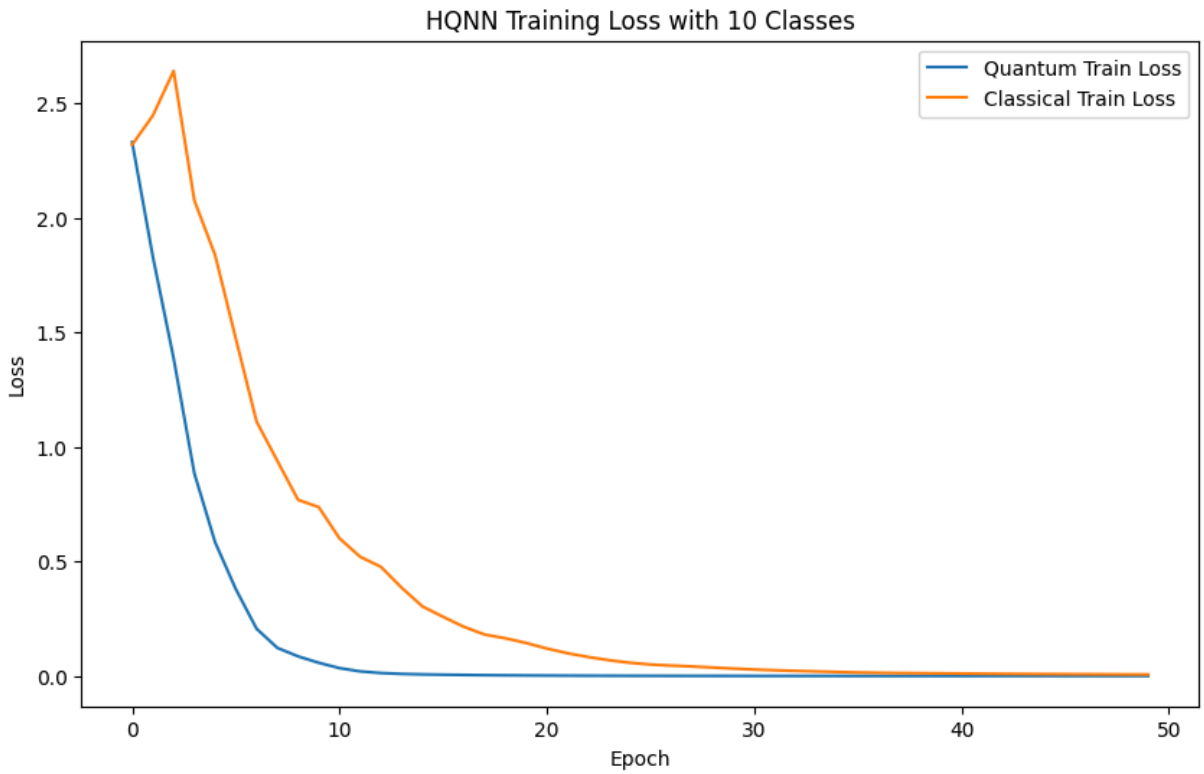

In [569…

```
import matplotlib.pyplot as plt

plt.figure(figsize=(10, 6))
plt.plot(q_train_hist, label="Quantum Train Accuracy")
plt.plot(q_val_hist, label="Quantum Validation Accuracy")
plt.plot(c_train_hist, label="Classical Train Accuracy")
plt.plot(c_val_hist, label="Classical Validation Accuracy")

plt.xlabel("Epoch")
plt.ylabel("Accuracy")
plt.legend()
plt.title(f"HQNN Training vs Validation Accuracy with {NUM_CLASSES} Classes"

plt.show()
```

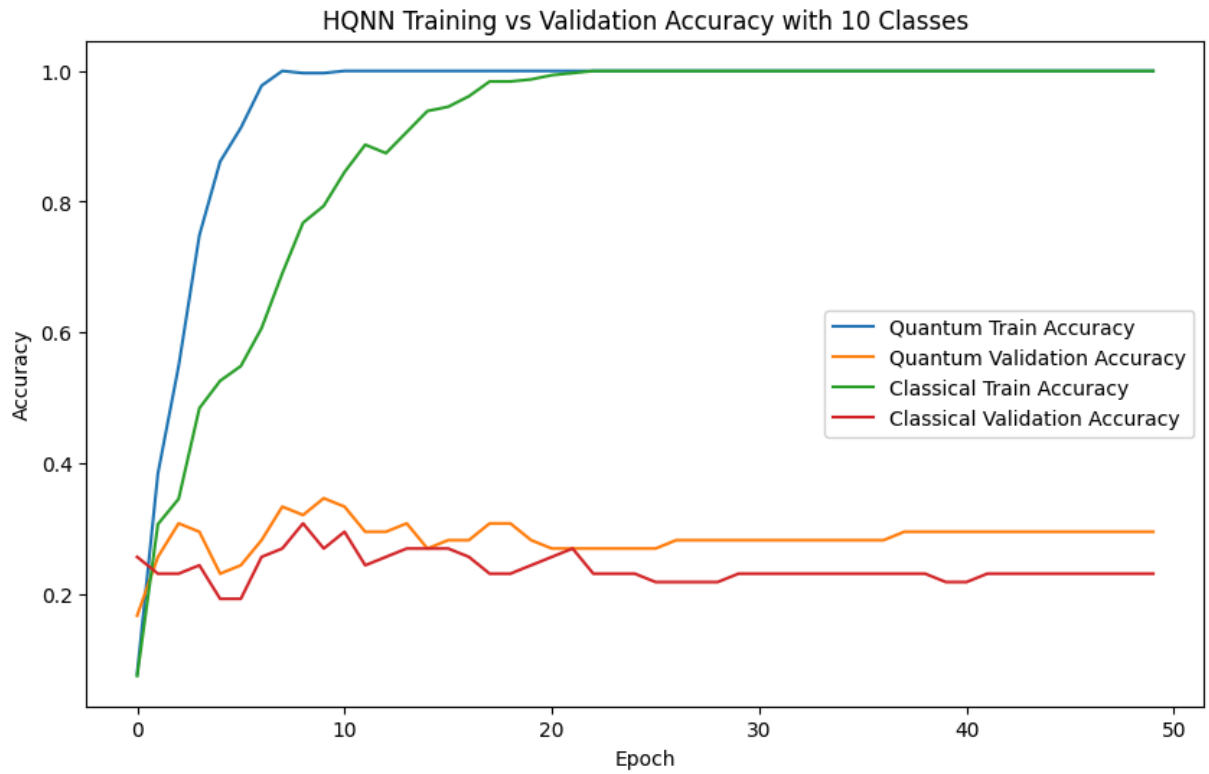

In [570…

```
plt.figure(figsize=(10, 6))
plt.plot(q_train_loss_hist, label="Quantum Train Loss")
plt.plot(q_val_loss_hist, label="Quantum Validation Loss")
plt.plot(c_train_loss_hist, label="Classical Train Loss")
plt.plot(c_val_loss_hist, label="Classical Validation Loss")

plt.xlabel("Epoch")
plt.ylabel("Loss")
plt.legend()
plt.title(f"HQNN Training vs Validation Loss with {NUM_CLASSES} Classes")

plt.show()
```

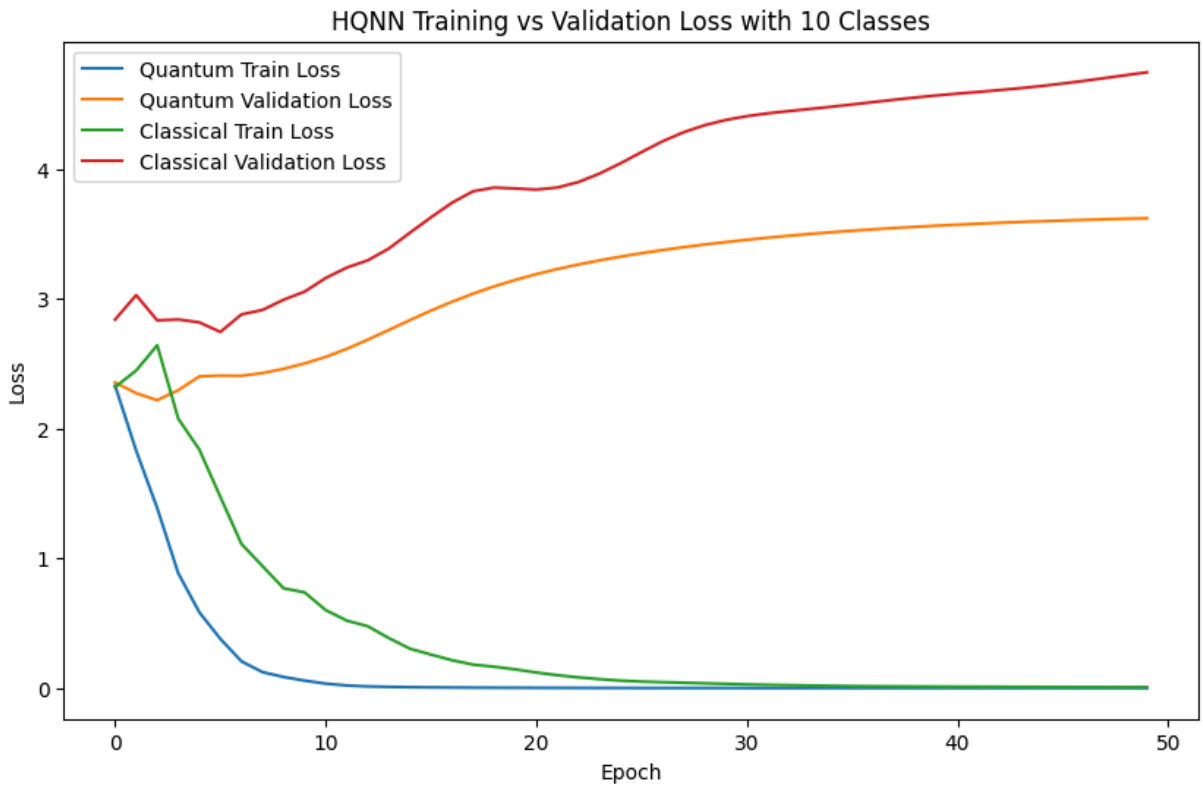

1. Maxwell Henderson, Samriddhi Shakya, Shashindra Pradhan, Tristan Cook. "Quanvolutional Neural Networks: Powering Image Recognition with Quantum Circuits." arXiv:1904.04767, 2019.