US Army Corps
of Engineers
Alaska District

AIRCRAFT PARTS STORAGE

FT. WAINWRIGHT, ALASKA

BACKCHECK, 16 JULY 2009
FTW336A
PN 65076
INV. NO. W911KB-09-R-0007

Drawing x:\UNIFIED\EN-TE\Jobs\FTW336A\Dwgs\FTW336A-001-G1-1.dwg last saved on 1/30/2009 9:14 AM was plotted by Curfew, Donald L POA on 7/17/2009 6:27 AM

AIRCRAFT PARTS STORAGE

FT. WAINWRIGHT, ALASKA

BACKCHECK - FTW336A/PN 65076, 16 JULY 2009

INV. NO. W911KB-09-R-0007

ALASKA DISTRICT U.S. ARMY CORPS OF ENGINEERS

SCHEDULE OF DRAWINGS

SHT	REF. NUM.	SHEET TITLE
		GENERAL
1	G1.1	COVER SHEET
2	G2.1	INDEX SHEET
3	LV1.01	LOCATION AND VICINITY MAP
		CIVIL: GENERAL
4	V1.01	SURVEY
5	C0.01	SOIL BORING LOGS 1 OF 2
6	C0.02	SOIL BORING LOGS 2 OF 2
		CIVIL: PLANS
7	D1.01	DEMOLITION PLAN
8	C1.01	OVERALL SITE PLAN
9	C2.01	BUILDING AREA GRADING PLAN
10	C2.02	PARKING AREA GRADING PLAN
11	C3.01	BUILDING EARTHWORK SECTIONS
		CIVIL: DETAILS
12	C4.01	EARTHWORK DETAILS
13	C4.02	MISCELLANEOUS DETAILS 1
14	C4.03	MISCELLANEOUS DETAILS 2
15	C4.04	SIGN DETAILS
16	C4.05	SECURITY FENCE DETAILS
17	C4.06	CULVERT THAW PIPE DETAIL
		ARCHITECTURAL: GENERAL
18	A0.01	SYMBOLS AND ABBREVIATIONS
19	A0.02	WALL TYPES
20	A0.03	ARCHITECTURAL PERSPECTIVE VIEW
		ARCHITECTURAL: PLANS
21	A1.01	OVERALL FLOOR PLAN
22	A1.02	ENLARGED FLOOR PLAN
23	A1.03	ENLARGED FLOOR PLAN
24	A1.04	OVERALL ROOF PLAN
		ARCHITECTURAL: REFLECTED CEILING PLANS
25	A2.01	OVERALL RELECTED CEILING PLAN
26	A2.02	ENLARGED REFLECTED CEILING PLAN
		ARCHITECTURAL: ELEVATIONS
27	A3.01	ELEVATION VIEWS
28	A3.02	ELEVATION VIEWS
		ARCHITECTURAL: SECTIONS
29	A4.01	BUILDING SECTIONS
30	A4.02	BUILDING SECTIONS
31	A4.03	WALL SECTIONS
32	A4.04	WALL SECTIONS
		ARCHITECTURAL: SCHEDULES & INTERIORS
33	A5.01	DOOR & WINDOW SCHEDULES
34	A5.02	FINISHES, MATERIALS & EQUIPMENT SCHEDULES
35	A5.03	ROOM FINISH PLAN
36	A5.04	INTERIOR ELEVATIONS
		ARCHITECTURAL: DETAILS
37	A6.01	DETAILS – BUILDING EXTERIOR
38	A6.02	DETAILS – DOORS & GLAZING
39	A6.03	DETAILS – BUILDING INTERIOR
40	A6.04	DETAILS – BUILDING SIGNAGE
		STRUCTURAL: GENERAL
41	S0.1	GENERAL NOTES AND ABBREVIATIONS 1
42	S0.2	GENERAL NOTES AND ABBREVIATIONS 2
43	S0.3	SPECIAL INSPECTION SCHEDULE
44	S0.4	STRUCTURAL SCHEDULES
45	S0.5	JOIST LOADING DIAGRAMS
46	S0.6	WIND COMPONENTS AND CLADDING PRESSURES
		STRUCTURAL: PLANS
47	S1.01	FOUNDATION PLAN
48	S1.02	ROOF FRAMING PLAN
49	S1.03	MEZZANINE FRAMING PLAN
50	S1.04	OFFICE CEILING FRAMING PLAN
		STRUCTURAL: ELEVATIONS
51	S2.01	FRAME ELEVATIONS 1
52	S2.02	FRAME ELEVATIONS 2
53	S2.03	FRAME ELEVATIONS 3
54	S2.04	WALL SECTIONS 1
55	S2.05	WALL SECTIONS 2
		STRUCTURAL: DETAILS
56	S3.01	FOUNDATION DETAILS 1
57	S3.02	FOUNDATION DETAILS 2
58	S3.03	FOUNDATION DETAILS 3
59	S3.04	FOUNDATION DETAILS 4
60	S3.05	FOUNDATION DETAILS 5
61	S4.01	FRAMING DETAILS 1
62	S4.02	FRAMING DETAILS 2
63	S4.03	FRAMING DETAILS 3
64	S4.04	FRAMING DETAILS 4
65	S5.01	BRACED FRAME CONNECTION DETAILS 1
66	S5.02	BRACED FRAME CONNECTION DETAILS 2
67	S6.01	STUD WALL DETAILS 1
68	S6.02	STUD WALL DETAILS 2
69	S6.03	STUD WALL DETAILS 3
70	S6.04	STUD WALL DETAILS 4
		MECHANICAL: GENERAL
71	M0.01	MECHANICAL LEGEND
72	M0.02	MECHANICAL EQUIPMENT SCHEDULE
		MECHANICAL: PLANS
73	M1.01	MECHANICAL HEATING PLAN
74	M1.02	MECHANICAL PIPING ISOMETRIC
75	M1.03	HEATING PLANT DIAGRAM
76	M1.04	MECHANICAL VENTILATION PLAN
77	M1.05	VENTILATION DUCTWORK ISOMETRIC
78	M1.06	PLUMBING PLAN
79	M1.07	PLUMBING ENLARGED FLOOR PLAN
80	M1.08	PLUMBING ISOMETRIC DIAGRAM
81	M1.09	PLUMBING WATER PIPING ISOMETRIC DIAGRAM
82	M1.10	ENLARGED MECHANICAL ROOM PLAN
		MECHANICAL: SECTIONS
83	M2.01	MECHANICAL ROOM SECTIONS
84	M2.02	SECTIONS
		MECHANICAL: DETAILS
85	M3.01	RADIANT FLOOR AND SNOWMELT DETAILS
86	M3.02	PIPING AND PLUMBING DETAILS
87	M3.03	MECHANICAL DETAILS
88	M3.04	SEISMIC RESTRAINT DETAILS
89	M3.05	MECHANICAL DETAILS
		MECHANICAL: CONTROLS
90	M4.01	CONTROL LEGEND
91	M4.02	BUILDING HEAT PLANT CONTROL DIAGRAM
92	M4.03	BUILDING HEAT PLANT CONTROL MATRIX
93	M4.04	ERV–1 CONTROL DIAGRAM AND MATRIX
94	M4.05	ERV–2 CONTROL DIAGRAM AND MATRIX
95	M4.06	ERV–3 CONTROL DIAGRAM AND MATRIX
96	M4.07	BASEBOARD, CUH, UH, & RCP CONTROL DIAGRAM AND MATRICES
		ELECTRICAL: GENERAL
97	E1.01	LEGEND AND ABBREVIATIONS
98	E1.02	LIGHTING FIXTURE SCHEDULE
		ELECTRICAL: PLANS
99	E2.01	SITE PLAN 1
100	E2.02	SITE PLAN 2
101	E2.03	SITE PLAN 3
102	E3.01	LIGHTING PLAN
103	E3.02	POWER PLAN
104	E3.03	ENLARGED PLANS
105	E3.04	COMMUNICATION PLAN
106	E4.01	POWER SINGLE LINE DIAGRAM
107	E4.02	POWER PANEL SCHEDULES
108	E5.01	COMMUNICATIONS RISER DIAGRAMS
109	E5.02	MASS NOTIFICATION SYSTEM
		ELECTRICAL: DETAILS
110	E6.01	DETAILS 1
111	E6.02	DETAILS 2
112	E6.03	DETAILS 3
		FIRE PROTECTION: PLANS
113	FP1.01	FIRE PROTECTION PLAN
114	FP1.02	FIRE PROTECTION DETAILS
115	FP1.03	FIRE PROTECTION PUMP ROOM ISOMETRIC
116	FA1.01	FIRE ALARM PLAN
117	FA1.02	FIRE ALARM DETAILS
118	LS1.01	LIFE SAFETY PLAN

Drawing x:\UNIFIED\EN-TE\Jobs\FTW336A\Dwgs\FTW336A-002-G2-1.dwg last saved on 7/15/2009 4:03 PM was plotted by Curfew, Donald L POA on 7/17/2009 6:27 AM

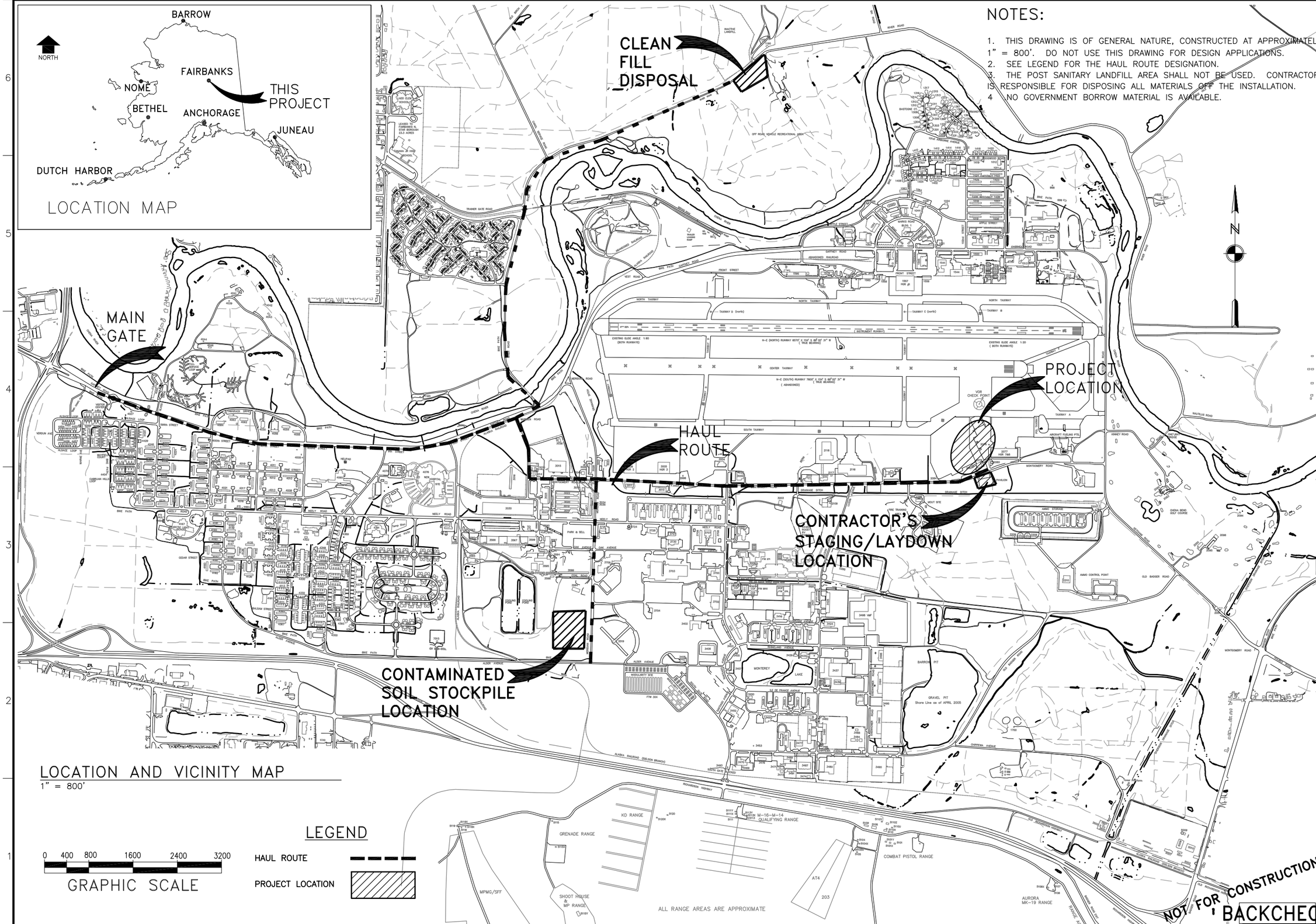

NOTES:

1. THIS DRAWING IS OF GENERAL NATURE, CONSTRUCTED AT APPROXIMATELY 1" = 800'. DO NOT USE THIS DRAWING FOR DESIGN APPLICATIONS.
2. SEE LEGEND FOR THE HAUL ROUTE DESIGNATION.
3. THE POST SANITARY LANDFILL AREA SHALL NOT BE USED. CONTRACTOR IS RESPONSIBLE FOR DISPOSING ALL MATERIALS OFF THE INSTALLATION.
4. NO GOVERNMENT BORROW MATERIAL IS AVAILABLE.

LOCATION AND VICINITY MAP

1" = 800'

LEGEND

HAUL ROUTE

PROJECT LOCATION

0 400 800 1600 2400 3200

GRAPHIC SCALE

US ARMY CORPS OF ENGINEERS
ALASKA DISTRICT

CONTRACT NO. _____
CONTRACTOR _____
CITY _____ STATE _____
PRIME CONTRACTOR _____
Recommended: _____
RESIDENT ENGINEER _____
Approved: _____
Date: _____

Symb	Action	Description	Date	Appvd

U.S. ARMY ENGINEER DISTRICT
CORPS OF ENGINEERS
ANCHORAGE, ALASKA

Designed: MED
Drawn: J.S.D.
Reviewed: T. Lubeck
Chief — Section
Submitted: D. Frenier — Section
Date: 16 JULY 2009
Dwg Scale: AS NOTED
Plot Scale: 1:2
File: FTW336A-003-LV1-01
Drawing # F-211-13-01
INV. NO. W911KB-09-R-0007
PN 65076
FTW336A

FT. WAINWRIGHT, ALASKA
AIRCRAFT PARTS STORAGE
CIVIL
GENERAL
LOCATION AND VICINITY MAP

Reference number:
LV1.01
Sheet 3 of 118

Drawing x:\UNIFIED\EN-TE\Jobs\FTW336A\Dwgs\FTW336A-003-LV1-01.dwg last saved on 7/14/2009 4:16 PM was plotted by Curfew, Donald L POA on 7/17/2009 6:27 AM

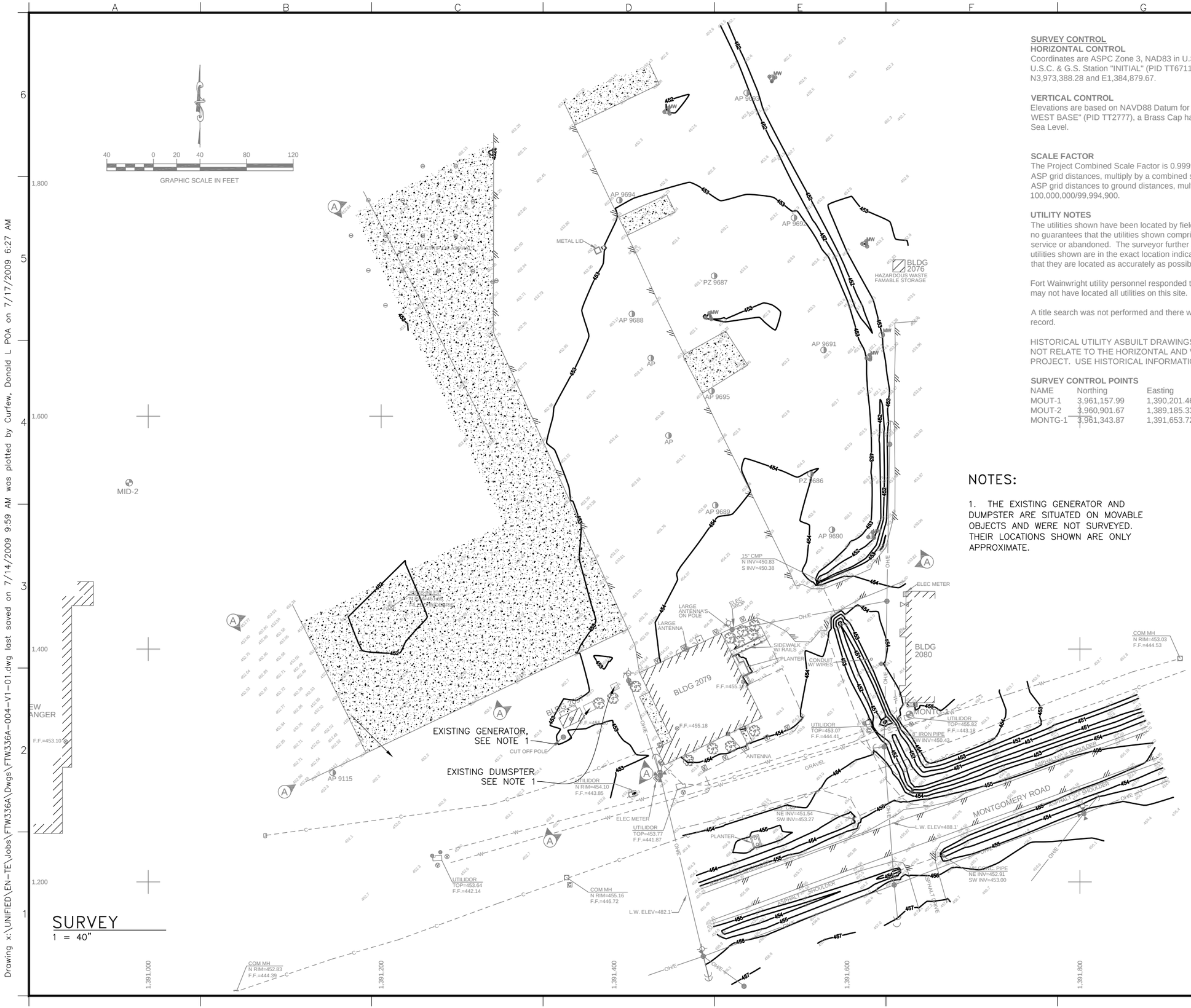

SURVEY
1 = 40"

SURVEY CONTROL

HORIZONTAL CONTROL

Coordinates are ASPC Zone 3, NAD83 in U.S. Feet. The Basis of Coordinates is U.S.C. & G.S. Station "INITIAL" (PID TT6711), a Brass Cap having a value of N3,973,388.28 and E1,384,879.67.

VERTICAL CONTROL

Elevations are based on NAVD88 Datum for U.S. Engineer Office monument "LADD WEST BASE" (PID TT2777), a Brass Cap having a value of 447.31 feet above Mean Sea Level.

SCALE FACTOR

The Project Combined Scale Factor is 0.99994900. To convert ground distance to ASP grid distances, multiply by a combined scale factor of 0.99994900. To convert ASP grid distances to ground distances, multilply by a combined scale factor of 100,000,000/99,994,900.

UTILITY NOTES

The utilities shown have been located by field survey methods. The surveyor makes no guarantees that the utilities shown comprise all such utilities in the area, either in service or abandoned. The surveyor further does not warrant that the underground utilities shown are in the exact location indicated if marked by others. He does certify that they are located as accurately as possible from information available.

Fort Wainwright utility personnel responded to the request to locate utilities, but they may not have located all utilities on this site.

A title search was not performed and there was no attempt to locate easements of record.

HISTORICAL UTILITY ASBUILT DRAWINGS AND OTHER INFORMATION MAY NOT RELATE TO THE HORIZONTAL AND VERTICAL DATUM FOR THIS PROJECT. USE HISTORICAL INFORMATION WITH CAUTION!

SURVEY CONTROL POINTS

NAME	Northing	Easting	Elevation	Description
MOUT-1	3,961,157.99	1,390,201.46	455.69	Brass Cap
MOUT-2	3,960,901.67	1,389,185.33	455.66	Brass Cap
MONTG-1	3,961,343.87	1,391,653.72	455.81	Brass Cap

NOTES:

1. THE EXISTING GENERATOR AND DUMPSTER ARE SITUATED ON MOVABLE OBJECTS AND WERE NOT SURVEYED. THEIR LOCATIONS SHOWN ARE ONLY APPROXIMATE.

LEGEND

- SURVEY MONUMENT
- TREE
- POWER POLE
- GUY ANCHOR
- POWER POLE W/ LIGH
- TRANSFORMER
- JUNCTION BOX
- ELECTRIC PEDESTAL
- VEHICLE HEATER OUT
- COMMUNICATION PED
- FIRE HYDRANT
- STORM DRAIN
- VENT PIPE
- CULVERT
- GUARD POST / BOLLAI
- AUGER POINT
- MW MONITORING WELL
- F.F. FINISH FLOOR
- AIRCRAFT TIE DOWN
- OH/E OVERHEAD ELECTRIC
- C COMMUNICATION LINE
- EDGE OF PAVEMENT
- EDGE OF GRAVEL
- BUILDING
- CONCRETE
- 101 MINOR CONTOUR
- 100 MAJOR CONTOUR
- XXX.XX SPOT ELEVATION

US ARMY CORPS OF ENGINEERS
ALASKA DISTRICT

CONTRACT NO. _____
CONTRACTOR _____
CITY _____ STATE _____
PRIME CONTRACTOR _____
Recommended: _____
RESIDENT ENGINEER _____
Approved: _____
Date: _____

Date	Approd	Description	Grnd Action

U.S. ARMY ENGINEER DISTRICT
CORPS OF ENGINEERS
ANCHORAGE, ALASKA

Designed: MED
Drawn: MED
Reviewed: T. Lubeck
Submitted: D. Frenter
Date: 16 JULY 2009
Dwg Scale: AS NOTED
Plot Scale: 1:2
File: FTW336A-004-V1-01
Drawing No. F-F-211-13-01
Chief — Section
Chief — Branch
INV. NO. W911KB-09-R-0007
PN 65076
FTW336A

FT. WAINWRIGHT, ALASKA
AIRCRAFT PARTS STORAGE
CIVIL
GENERAL
SURVEY

Reference number:
V1.01

Sheet 4 of 118

NOT FOR CONSTRUCTION
BACKCHECK

Drawing x:\UNIFIED\EN-TE\Jobs\FTW336A\Dwgs\FTW336A-004-V1-01.dwg last saved on 7/14/2009 9:59 AM was plotted by Curfew, Donald L POA on 7/17/2009 6:27 AM

ALASKA DISTRICT
CORPS OF ENGINEERS
ENGINEERING SERVICES

Soils and Geology Section
EXPLORATION LOG

Project: ATF Aircraft Parts Storage Facility (FTW336A), Fort Wainwright, Alaska
Page 1 of 1
Date: 11 Apr 2008

Drilling Agency: ☒ Alaska District ☐ Other
Location: Northing: 3,991,309 ft. Easting: 1,391,502 ft.
Datum: Vertical NAVD88; Horizontal ASP23 NAD83
Top of Hole Elevation: 454.0 ft.
Hole Number, Field: TB-1-P
Permanent: AP-9605-P
Operator: Lyle Cain
Inspector: Charles Wilson
Type of Hole: ☐ other; ☐ Test Pit ☒ Auger Hole ☐ Monitoring Well ☒ Piezometer
Depth to Groundwater: 10.0 ft. WD
Depth Drilled: 29.5 ft
Total Depth: 31.5 ft.
Hammer Weight: 340 lbs
Split Spoon I.D.: 2.5 in.
Size and Type of Bit: 8 in. Hollow Stem Auger
Type of Equipment: CME-850 with Automatic Hammer
Type of Samples: Drive

Depth (ft)	Sample Number	Sample Type	Blow Count	Classification (ASTM D 2487 or D 2488)	Symbol	Grain Size: % Gravel	% Sand	% Fines	Max Size (in.)	Moisture	Description and Remarks
											SURFACE: Grass, open area
1				SW-SM Poorly graded SAND with Silt and Gravel					1		Brown, frozen, subrounded gravel, fine sand, nonplastic (NP) fines, green moss fibers, possible HLL
2	Nbm	F2		SM Silty SAND		12	42	46	12.1	0.79	13 Brown, frozen, subrounded gravel, fine sand, NP fines, possible HLL
3	Nbm	F4		ML Sandy SILT		8	31	61	19.9	1	35 Brown, frozen to moist, subrounded gravel, fine sand, NP fines, possible HLL
4											
5											
6											
7											
8											
9											
10											
11											
12											
13											
14											
15											
16											
17											
18											
19											
20	NFS*			SP Poorly graded SAND with Gravel					1		Brown, moist, subrounded gravel, fine sand
21											
22											
23											
24	NFS*			GW Well-graded GRAVEL with Sand					1.5		Brown, moist, subrounded gravel, fine to coarse sand
25											
26											
27				GP Poorly graded GRAVEL with Sand					1		Brown, wet, subangular to subrounded gravel, fine to coarse sand
28											
29											
30				BP Poorly graded SAND with Gravel		40	57	3	1.25		Brown to gray, wet, subrounded gravel, fine to coarse sand
31											
32				SP Poorly graded SAND with Gravel					1		Brown to gray, wet, subrounded gravel, fine to coarse sand
33											
34											Bottom of Hole 31.5 ft. Elevation 422.5 ft. Groundwater Encountered While Drilling, at an elevation of 443.0 ft. PID = (ColdMed) Photo Ionization Detector

* Indicates Estimated Frost Classification

Project: ATF Aircraft Parts Storage Facility (FTW336A) Hole Number: AP-9605-P

ALASKA DISTRICT
CORPS OF ENGINEERS
ENGINEERING SERVICES

Soils and Geology Section
EXPLORATION LOG

Project: ATF Aircraft Parts Storage Facility (FTW336A), Fort Wainwright, Alaska
Page 1 of 1
Date: 11 Apr 2008

Drilling Agency: ☒ Alaska District ☐ Other
Location: Northing: 3,991,721 ft. Easting: 1,391,485 ft.
Datum: Vertical NAVD88; Horizontal ASP23 NAD83
Top of Hole Elevation: 452.0 ft.
Hole Number, Field: TB-2
Permanent: AP-9606-P
Operator: Lyle Cain
Inspector: Charles Wilson
Type of Hole: ☐ other; ☐ Test Pit ☐ Auger Hole ☐ Monitoring Well ☒ Piezometer
Depth to Groundwater: 15.5 ft. WD
Depth Drilled: 29.5 ft.
Total Depth: 31.5 ft.
Hammer Weight: 340 lbs
Split Spoon I.D.: 2.5 in.
Size and Type of Bit: 8 in. Hollow Stem Auger
Type of Equipment: CME-850 with Automatic Hammer
Type of Samples: Drive

Depth (ft)	Sample Number	Sample Type	Blow Count	Classification (ASTM D 2487 or D 2488)	Symbol	Grain Size: % Gravel	% Sand	% Fines	Max Size (in.)	Moisture	Description and Remarks
											SURFACE: Grass, open area
1				OL-SM Organic Silt with Oval Chunks		20	43	35	12.8		2 Top six inches, Black, frozen, angular to subangular gravel, fine to coarse sand, nonplastic (NP) fines, green moss, charred appearance, pieces of coal, HLL
2				SM Silty SAND with Gravel		22	46	32	11.7		14 Brown, frozen, subrounded gravel, fine sand, NP fines, green moss, some black charred particles, FILL
3											
4											
5											
6											
7											
8											
9											
10											
11											
12											
13											
14											
15											
16											
17											
18											
19											
20				GP Poorly graded GRAVEL with Sand		61	44	6	2.4	2	2 Brown, frozen, subrounded gravel, fine sand, NP fines, hedge and roots to 10' depth, some black charred particles, HLL
21											
22											
23											
24											
25											
26											
27											
28											
29											
30				GP Poorly graded GRAVEL with Sand					2.5		Brown, moist to wet, subrounded gravel, fine to coarse sand, NP fines
31											
32				GP-GM Poorly graded GRAVEL with Silt and Sand		49	46	5	7.1	1.6	6 Brown, moist to wet, subrounded gravel, fine to coarse sand, NP fines
33											
34											

* Indicates Estimated Frost Classification

Project: ATF Aircraft Parts Storage Facility (FTW336A) Hole Number: AP-9606-P

ALASKA DISTRICT
CORPS OF ENGINEERS
ENGINEERING SERVICES

Soils and Geology Section
EXPLORATION LOG

Project: ATF Aircraft Parts Storage Facility (FTW336A), Fort Wainwright, Alaska
Page 1 of 1
Date: 12 Apr 2008

Drilling Agency: ☒ Alaska District ☐ Other
Location: Northing: 3,991,888 ft. Easting: 1,391,413 ft.
Datum: Vertical NAVD88; Horizontal ASP23 NAD83
Top of Hole Elevation: 453.1 ft.
Hole Number, Field: TB-3
Permanent: AP-9608
Operator: Lyle Cain
Inspector: Charles Wilson
Type of Hole: ☐ other; ☐ Test Pit ☒ Auger Hole ☐ Monitoring Well ☐ Piezometer
Depth to Groundwater: 14.5 ft. WD
Depth Drilled: 29.5 ft.
Total Depth: 31.5 ft
Hammer Weight: 340 lbs
Split Spoon I.D.: 2.5 in.
Size and Type of Bit: 8 in. Hollow Stem Auger
Type of Equipment: CME-850 with Automatic Hammer
Type of Samples: Drive

Depth (ft)	Sample Number	Sample Type	Blow Count	Classification (ASTM D 2487 or D 2488)	Symbol	Grain Size: % Gravel	% Sand	% Fines	Max Size (in.)	Moisture	Description and Remarks
											SURFACE: Grass, open area, standing water under snow, moved 10 feet west
1				AC Asphalt Concrete							Six inches of asphalt concrete pavement
2				NR No Recovery							No Recovery
3	Nbm	NFS*	3/3/6	GW Well-graded GRAVEL with Sand					2		Brown, frozen, subrounded gravel, fine sand, FILL
4	Nbm	PFS	57								
5											
6											
7											
8											
9											
10											
11											
12											
13											
14											
15											
16											
17											
18											
19											
20											
21											
22											
23											
24											
25											
26											
27											
28											
29											
30											
31											
32											
33											
34											

* Indicates Estimated Frost Classification

Project: ATF Aircraft Parts Storage Facility (FTW336A) Hole Number: AP-9608

ALASKA DISTRICT
CORPS OF ENGINEERS
ENGINEERING SERVICES

Soils and Geology Section
EXPLORATION LOG

Project: ATF Aircraft Parts Storage Facility (FTW336A), Fort Wainwright, Alaska
Page 1 of 1
Date: 12 Apr 2008

Drilling Agency: ☒ Alaska District ☐ Other
Location: Northing: 3,991,324 ft. Easting: 1,391,487 ft.
Datum: Vertical NAVD88; Horizontal ASP23 NAD83
Top of Hole Elevation: 454.0 ft.
Hole Number, Field: TB-4
Permanent: AP-9609
Operator: Lyle Cain
Inspector: Charles Wilson
Type of Hole: ☐ other; ☐ Test Pit ☒ Auger Hole ☐ Monitoring Well ☐ Piezometer
Depth to Groundwater: 13.5 ft. WD
Depth Drilled: 29.5 ft
Total Depth: 31.5 ft.
Hammer Weight: 340 lbs
Split Spoon I.D.: 2.5 in.
Size and Type of Bit: 8 in. Hollow Stem Auger
Type of Equipment: CME-850 with Automatic Hammer
Type of Samples: Drive

Depth (ft)	Sample Number	Sample Type	Blow Count	Classification (ASTM D 2487 or D 2488)	Symbol	Grain Size: % Gravel	% Sand	% Fines	Max Size (in.)	Moisture	Description and Remarks
											SURFACE: Paved apron shoulder
1				AC Asphalt Concrete							Six inches of asphalt concrete pavement
2	Nbm	S1	21/14/14/19	GP Poorly graded GRAVEL with Silt and Sand		65	27	8	2.7	1.26	2 Brown, frozen, subrounded gravel, fine to coarse sand, nonplastic (NP) fines, FILL
3	Nbm	PFS	14/19/19/19	GM Well-graded GRAVEL with Silt and Sand		58	38	8	2.9	1.5	1 Brown, frozen, subrounded gravel, fine to coarse sand, NP fines, FILL
4	Nbm	NFS*	8/10/10/10	GP Poorly graded SAND with Gravel		0	67	33	6.7	1	0.0 Brown, frozen, subrounded gravel, fine to coarse sand, NP fines, FILL
5	Nbm	F2		SM Silty SAND							17 Brown, frozen, fine sand, NP fines
6											
7											
8											
9											
10											
11											
12											
13											
14											
15											
16											
17											
18											
19											
20											
21											
22											
23											
24											
25											
26											
27											
28											
29											
30											
31											
32											
33											
34											

* Indicates Estimated Frost Classification

Project: ATF Aircraft Parts Storage Facility (FTW336A) Hole Number: AP-9609

ALASKA DISTRICT
CORPS OF ENGINEERS
ENGINEERING SERVICES

Soils and Geology Section
EXPLORATION LOG

Project: ATF Aircraft Parts Storage Facility (FTW336A), Fort Wainwright, Alaska
Page 1 of 1
Date: 12 Apr 2008

Drilling Agency: ☒ Alaska District ☐ Other
Location: Northing: 3,991,597 ft. Easting: 1,391,597 ft.
Datum: Vertical NAVD88; Horizontal ASP23 NAD83
Top of Hole Elevation: 453.2 ft.
Hole Number, Field: TB-5
Permanent: AP-9680
Operator: Lyle Cain
Inspector: Charles Wilson
Type of Hole: ☐ other; ☐ Test Pit ☒ Auger Hole ☐ Monitoring Well ☐ Piezometer
Depth to Groundwater: 10.0 ft. WD
Depth Drilled: 14.5 ft.
Total Depth: 16.0 ft.
Hammer Weight: 340 lbs
Split Spoon I.D.: 2.5 in.
Size and Type of Bit: 8 in. Hollow Stem Auger
Type of Equipment: CME-850 with Automatic Hammer
Type of Samples: Drive

Depth (ft)	Sample Number	Sample Type	Blow Count	Classification (ASTM D 2487 or D 2488)	Symbol	Grain Size: % Gravel	% Sand	% Fines	Max Size (in.)	Moisture	Description and Remarks
											SURFACE: Grass, open area
1				SM Silty SAND with Gravel and Cobbles							Brown, frozen, subrounded gravel, fine sand, nonplastic (NP) fines, cobbles 2.5 inch nobbin, grass roots, HLL
2				ML SILT with Sand		1	22	77	20.0	0.75	19 Brown, frozen, subrounded gravel, fine sand, NP fines, grass roots, one-inch twig
3	Nbm	F4		ML SILT		0	15	85	21.3		20 Brown, frozen, fine sand, NP fines
4											
5											
6											
7											
8											
9											
10											
11											
12											
13											
14											
15											
16											
17											
18											
19											
20											
21											
22											
23											
24											
25											
26											
27											
28											
29											
30											
31											
32											
33											
34											

* Indicates Estimated Frost Classification

Project: ATF Aircraft Parts Storage Facility (FTW336A) Hole Number: AP-9690

ALASKA DISTRICT
CORPS OF ENGINEERS
ENGINEERING SERVICES

Soils and Geology Section
EXPLORATION LOG

Project: ATF Aircraft Parts Storage Facility (FTW336A), Fort Wainwright, Alaska
Page 1 of 1
Date: 13 Apr 2008

Drilling Agency: ☒ Alaska District ☐ Other
Location: Northing: 3,991,666 ft. Easting: 1,391,381 ft.
Datum: Vertical NAVD88; Horizontal ASP23 NAD83
Top of Hole Elevation: 453.1 ft.
Hole Number, Field: TB-6
Permanent: AP-9681
Operator: Lyle Cain
Inspector: Charles Wilson
Type of Hole: ☐ other; ☐ Test Pit ☒ Auger Hole ☐ Monitoring Well ☐ Piezometer
Depth to Groundwater: 17.0 ft. WD
Depth Drilled: 29.5 ft.
Total Depth: 31.5 ft.
Hammer Weight: 340 lbs
Split Spoon I.D.: 2.5 in.
Size and Type of Bit: 8 in. Hollow Stem Auger
Type of Equipment: CME-850 with Automatic Hammer
Type of Samples: Drive

Depth (ft)	Sample Number	Sample Type	Blow Count	Classification (ASTM D 2487 or D 2488)	Symbol	Grain Size: % Gravel	% Sand	% Fines	Max Size (in.)	Moisture	Description and Remarks
											SURFACE: Grass, open area
1				SM Silty SAND with Gravel					1.5		1 Dark brown to brown, frozen, subrounded gravel, fine sand, nonplastic (NP) fines, grass roots, FILL
2				SP-SM Poorly graded SAND with Silt and Gravel					1		Brown, frozen, subrounded gravel, fine to coarse sand, NP fines, FILL
3				SM Silty SAND							Brown, frozen, fine sand, NP fines, FILL
4											
5											
6											
7											
8											
9											
10											
11											
12											
13											
14											
15											
16											
17											
18											
19											
20											
21											
22											
23											
24											
25											
26											
27											
28											
29											
30											
31											
32											
33											
34											

* Indicates Estimated Frost Classification

Project: ATF Aircraft Parts Storage Facility (FTW336A) Hole Number: AP-9681

ALASKA DISTRICT
CORPS OF ENGINEERS
ENGINEERING SERVICES

Soils and Geology Section
EXPLORATION LOG

Project: ATF Aircraft Parts Storage Facility (FTW336A), Fort Wainwright, Alaska
Page 1 of 1
Date: 13 Apr 2008

Drilling Agency: ☒ Alaska District ☐ Other
Location: Northing: 3,991,778 ft. Easting: 1,391,559 ft.
Datum: Vertical NAVD88; Horizontal ASP23 NAD83
Top of Hole Elevation: 453.1 ft.
Hole Number, Field: TB-7
Permanent: AP-9687
Operator: Lyle Cain
Inspector: Charles Wilson
Type of Hole: ☐ other; ☐ Test Pit ☒ Auger Hole ☐ Monitoring Well ☐ Piezometer
Depth to Groundwater: 10.0 ft. WD
Depth Drilled: 14.5 ft.
Total Depth: 16.0 ft.
Hammer Weight: 340 lbs
Split Spoon I.D.: 2.5 in.
Size and Type of Bit: 8 in. Hollow Stem Auger
Type of Equipment: CME-850 with Automatic Hammer
Type of Samples: Drive

Depth (ft)	Sample Number	Sample Type	Blow Count	Classification (ASTM D 2487 or D 2488)	Symbol	Grain Size: % Gravel	% Sand	% Fines	Max Size (in.)	Moisture	Description and Remarks
											SURFACE: Grass, open area, standing water under snow, moved 10 feet west
1	Nbm	F-2		SM Silty SAND with Gravel		26	46	28	10.3	1.5	8 Brown, frozen, subrounded gravel, fine sand, nonplastic (NP) fines, FILL
2	Nbm	F3		SM Silty SAND with Gravel		34	47	34	15.0	1	16 Brown, frozen, subrounded gravel, fine sand, NP fines, drove through piece of concrete at three feet, FILL
3	Nbm	S2*	3/3/3/3	SP-SM Poorly graded SAND with Silt and Gravel						1	Brown, frozen to moist, subrounded gravel, fine sand, NP fines, drove through piece of concrete at 3.3 to 6.0 foot, HLL
4											
5											
6											
7											
8											
9											
10											
11											
12											
13											
14											
15											
16											
17											
18											
19											
20											
21											
22											
23											
24											
25											
26											
27											
28											
29											
30											
31											
32											
33											
34											

* Indicates Estimated Frost Classification

Project: ATF Aircraft Parts Storage Facility (FTW336A) Hole Number: AP-9687

ALASKA DISTRICT
CORPS OF ENGINEERS
ENGINEERING SERVICES

Soils and Geology Section
EXPLORATION LOG

Project: ATF Aircraft Parts Storage Facility (FTW336A), Fort Wainwright, Alaska
Page 1 of 1
Date: 13 Apr 2008

Drilling Agency: ☒ Alaska District ☐ Other
Location: Northing: 3,991,878 ft. Easting: 1,391,514 ft.
Datum: Vertical NAVD88; Horizontal ASP23 NAD83
Top of Hole Elevation: 452.2 ft.
Hole Number, Field: TB-8
Permanent: AP-9693
Operator: Lyle Cain
Inspector: Charles Wilson
Type of Hole: ☐ other; ☐ Test Pit ☒ Auger Hole ☐ Monitoring Well ☐ Piezometer
Depth to Groundwater: 13.3 ft. WD
Depth Drilled: 14.0 ft.
Total Depth: 16.3 ft.
Hammer Weight: 340 lbs
Split Spoon I.D.: 2.5 in.
Size and Type of Bit: 8 in. Hollow Stem Auger
Type of Equipment: CME-850 with Automatic Hammer
Type of Samples: Drive

Depth (ft)	Sample Number	Sample Type	Blow Count	Classification (ASTM D 2487 or D 2488)	Symbol	Grain Size: % Gravel	% Sand	% Fines	Max Size (in.)	Moisture	Description and Remarks
											SURFACE: Grass, open area, near weeds with standing water under snow
1				GW Well-graded GRAVEL with Sand		58	39	3	0.9	2	7 Brown, moist, subrounded gravel, fine to coarse sand, FILL
2	Nbm	S1		GP-GM Poorly graded GRAVEL with Silt and Sand		48	44	8	3.8	2.5	9 Brown, moist to frozen, subrounded gravel, fine sand, nonplastic (NP) fines, FILL
3	Nbm	PFS		GP Poorly graded GRAVEL with Sand						1.5	0.0 Brown, frozen, subrounded gravel, fine to coarse sand, FILL
4	Nbm	NFS*		SP Poorly graded SAND		4	91	5	1.9	0.21	8 Brown, moist, fine sand with two inch lenses of silty sand (OR)
5											
6											
7											
8											
9											
10											
11											
12											
13											
14											
15											
16											
17											
18											
19											
20											
21											
22											
23											
24											
25											
26											
27											
28											
29											
30											
31											
32											
33											
34											

* Indicates Estimated Frost Classification

Project: ATF Aircraft Parts Storage Facility (FTW336A) Hole Number: AP-9693

US ARMY CORPS OF ENGINEERS
ALASKA DISTRICT

CONTRACT NO. ___
CONTRACTOR ___
CITY ___ STATE ___
PRIME CONTRACTOR: ___ Recommended: ___
RESIDENT ENGINEER: ___ Approved: ___ Date: ___

Grade Action	Description	Date	Approd

U.S. ARMY ENGINEER DISTRICT
CORPS OF ENGINEERS
ANCHORAGE, ALASKA

Designed: MED
Drawn: MED
Reviewed: T. Lubeck
Chief — Geotech Sec — Section
Submitted: D. Frenter — Branch
Date: 16 JULY 2009
Drawing Scale: AS NOTED
Plot Scale: 1:2
File: FTW336A_005_00_01
Drawing #: F-211-13-01

INV. NO. W911KB-09-R-0007
PN 65076
FTW336A

FT. WAINWRIGHT, ALASKA
AIRCRAFT PARTS STORAGE
CIVIL
GENERAL
SOIL BORING LOGS 1 OF 2

Reference number: C0.01
Sheet 5 of 118

NOT FOR CONSTRUCTION
BACKCHECK

Drawing x:\UNIFIED\EN-TE\Jobs\FTW336A\Dwgs\FTW336A-005-C0-01.dwg last saved on 5/6/2009 5:16 PM was plotted by Curfew, Donald L POA on 7/17/2009 6:27 AM

ALASKA DISTRICT
CORPS OF ENGINEERS
ENGINEERING SERVICES

Soils and Geology Section
EXPLORATION LOG

Project: ATF Aircraft Parts Storage Facility (FTW336A), Fort Wainwright, Alaska — Page 1 of 1 — Date: 14 Apr 2008

Drilling Agency: ☒ Alaska District ☐ Other — Location: Northing 3,961,793 ft., Easting 1,391,405 ft. — Datum: Vertical NAVD88, Horizontal ASP23 NAD83

Hole Number, Field: TB-9 — Permanent: AP-9694 — Operator: Lyle Cain — Top of Hole Elevation: 492.7 ft. — Inspector: Robert Weakland

Type of Hole: ☐ other ☐ Test Pit ☒ Auger Hole ☐ Monitoring Well ☐ Piezometer — Depth to Groundwater: NR — Depth Drilled: 14.5 ft. — Total Depth: 16.0 ft.

Hammer Weight: 340 lbs — Split Spoon I.D.: 2.5 in. — Size and Type of Bit: 8 in. Hollow Stem Auger — Type of Equipment: CME-850 with Automatic Hammer — Type of Samples: Drive

Depth (ft.)	Sample Number	Sample Type	Recovery (in.)	PID (ppm)	USCS Symbol	Classification ASTM D 2487 or D 2488	Gravel %	Sand %	Fines %	Description and Remarks
										SURFACE: Grass, open area, snow to 19 inches
2		NR	S1		GP-GM	Poorly graded GRAVEL with Silt and Sand	51	38	11	3.7
4		S1	5 / 50/0"		GP-GM	Poorly graded GRAVEL with Silt, Sand, and Cobbles	52	41	7	3.5
6		NRS*	15		GP	Poorly graded GRAVEL with Sand				
8										
10		PFS	3		GW	Well-graded GRAVEL with Sand	58	38	4	1.8
12										
14										
16		NRS*	4		GP	Poorly graded GRAVEL with Sand				
18										
20										
22										
24										
26										
28										
30										
32										
34										

Coarse	Medium	Fine	Total Fines	Description and Remarks
				Brown, frozen, subrounded gravel, fine to coarse sand, nonplastic (NP) fines, 1 ft
0.5	0.0/0	0.0/0	0.0/0	Brown to gray, moist, subangular to subrounded gravel, fine to coarse sand, NP fines, cobble fractured while drilling, HLL
1.5	0.0/0	0.0/0	0.0/0	Brown, moist, subangular to subrounded gravel, fine to coarse sand, FS1
1	0.0/0	0.0/0	0.0/0	Brown, moist, subangular to subrounded gravel, fine to coarse sand
				Gray, moist to wet, subangular to subrounded gravel, fine to coarse sand
				Bottom of Hole 16.0 ft. Elevation: 476.7 ft. Groundwater Not Recorded PID = (Cold/Hot) Photo Ionization Detector

* Indicates Estimated Frost Classification — Project: ATF Aircraft Parts Storage Facility (FTW336A) — Hole Number: AP-9694

ALASKA DISTRICT
CORPS OF ENGINEERS
ENGINEERING SERVICES

Soils and Geology Section
EXPLORATION LOG

Project: ATF Aircraft Parts Storage Facility (FTW336A), Fort Wainwright, Alaska — Page 1 of 2 — Date: 15 Apr 2008

Drilling Agency: ☒ Alaska District ☐ Other — Location: Northing 3,961,621 ft., Easting 1,391,480 ft. — Datum: Vertical NAVD88, Horizontal ASP23 NAD83

Hole Number, Field: TB-10 — Permanent: AP-9695 — Operator: Lyle Cain — Top of Hole Deviation: 493.7 ft. — Inspector: Robert Weakland

Type of Hole: ☐ other ☐ Test Pit ☒ Auger Hole ☐ Monitoring Well ☐ Piezometer — Depth to Groundwater: 16.0 ft. WD — Depth Drilled: 74.5 ft. — Total Depth: 76.0 ft.

Hammer Weight: 140 lbs — Split Spoon I.D.: 1.375 in. — Size and Type of Bit: 8 in. Hollow Stem Auger — Type of Equipment: CME-850 with Automatic Hammer — Type of Samples: Drive

Depth (ft.)	Sample Number	Sample Type	Recovery (in.)	PID (ppm)	USCS Symbol	Classification ASTM D 2487 or D 2488	Gravel %	Sand %	Fines %	Description and Remarks
										SURFACE: Gravel, edge of paved apron shoulder
2	P2		22 / 4100		SM	Silty SAND with Gravel	31	49	17	6.7
4	P3		10 / 4100		ML	Sandy SILT	6	32	62	21.2
6	P4		10 / 4100		SM	Silty SAND				
8			6 / 4100		NR	No Recovery				
10	S1		4 / 4100		GP-GM	Poorly graded GRAVEL with Silt and Sand	47	45	8	2.5
12			4 / 4100		SW	Well graded SAND with Gravel				
14			4 / 4100		SP	Poorly graded SAND with Gravel	37	60	3	
16			4 / 4100		SP	Poorly graded SAND				
18			4 / 4100		GW	Well-graded GRAVEL with Sand	58	38	4	
20			6 / 4100		GP	Poorly graded GRAVEL with Sand				
22										
24										
26										
28										
30										
32										
34										

Coarse	Medium	Fine	Total Fines	Description and Remarks
				Brown, frozen, angular to subangular gravel, fine to coarse sand, nonplastic (NP) fines, 1 ft
0.8/0	0.0/0	0.0/0	0.0/0	Brown, frozen, fine sand, NP fines
				Brown, frozen to moist, fine sand, NP fines
				No recovery
0.8	0.0/0	0.0/0	0.0/0	Brown, moist, subangular to subrounded gravel, fine to coarse sand, NP fines
0.7				Gray, wet, subangular to subrounded gravel, fine to coarse sand
0.5				Gray, wet, subangular to subrounded gravel, fine to coarse sand
1				Gray, wet, subangular to subrounded gravel, fine to coarse sand
0.7				Gray, wet, angular to subrounded gravel, fine to coarse sand

* Indicates Estimated Frost Classification — Project: ATF Aircraft Parts Storage Facility (FTW336A) — Hole Number: AP-9695

ALASKA DISTRICT
CORPS OF ENGINEERS
ENGINEERING SERVICES

Soils and Geology Section
EXPLORATION LOG

Project: ATF Aircraft Parts Storage Facility (FTW336A), Fort Wainwright, Alaska — Page 2 of 2 — Date: 15 Apr 2008

Drilling Agency: ☒ Alaska District ☐ Other — Location: Northing 3,961,621 ft., Easting 1,391,480 ft. — Datum: Vertical NAVD88, Horizontal ASP23 NAD83

Hole Number, Field: TB-10 — Permanent: AP-9695 — Operator: Lyle Cain — Top of Hole Deviation: 493.7 ft. — Inspector: Robert Weakland

Type of Hole: ☐ other ☐ Test Pit ☒ Auger Hole ☐ Monitoring Well ☐ Piezometer — Depth to Groundwater: 16.0 ft. WD — Depth Drilled: 74.5 ft. — Total Depth: 76.0 ft.

Hammer Weight: 140 lbs — Split Spoon I.D.: 1.375 in. — Size and Type of Bit: 8 in. Hollow Stem Auger — Type of Equipment: CME-850 with Automatic Hammer — Type of Samples: Drive

Depth (ft.)	Sample Number	Sample Type	Recovery (in.)	PID (ppm)	USCS Symbol	Classification ASTM D 2487 or D 2488	Gravel %	Sand %	Fines %	Description and Remarks
										SURFACE: Gravel, edge of paved apron shoulder
42			10							
44			11 / 3		SW	Well-graded SAND with Gravel				
46			8 / 3		GP	Poorly graded GRAVEL				
48			8 / 3		SP	Poorly graded SAND with Gravel	49	49	2	
50			8 / 3		SP	Poorly graded SAND with Gravel				
52			8 / 3		SP	Poorly graded SAND				
54			8 / 3		SP	Poorly graded SAND				
56			8 / 3		NR	No Recovery				
58										
60										
62										
64										

Coarse	Medium	Fine	Total Fines	Description and Remarks
				SURFACE: Gravel, edge of paved apron shoulder
0.8				Gray, wet, subangular to subrounded gravel, fine to coarse sand
1				Gray, wet, subangular to subrounded gravel, fine to coarse sand
0.7				Gray, wet, subangular to subrounded gravel, fine to coarse sand
0.6				Gray, wet, subangular to subrounded gravel, fine to coarse sand
0.3				Gray, wet, subangular to subrounded gravel, fine to coarse sand
				Gray, wet, fine to medium sand
				No Recovery
				Bottom of Hole 76.0 ft. Elevation: 417.7 ft. Groundwater Encountered While Drilling, at an elevation of 417.7 ft. PID = (Cold/Hot) Photo Ionization Detector

* Indicates Estimated Frost Classification — Project: ATF Aircraft Parts Storage Facility (FTW336A) — Hole Number: AP-9695

ALASKA DISTRICT
CORPS OF ENGINEERS
ENGINEERING SERVICES

Soils and Geology Section
EXPLORATION LOG

Project: ATF Aircraft Parts Storage Facility (FTW336A), Fort Wainwright, Alaska — Page 1 of 1 — Date: 17 Apr 2008

Drilling Agency: ☒ Alaska District ☐ Other — Location: Northing 3,961,322 ft., Easting 1,391,314 ft. — Datum: Vertical NAVD88, Horizontal ASP23 NAD83

Hole Number, Field: TB-11 — Permanent: AP-9696 — Operator: Lyle Cain — Top of Hole Elevation: 492.2 ft. — Inspector: Robert Weakland

Type of Hole: ☐ other ☐ Test Pit ☒ Auger Hole ☐ Monitoring Well ☐ Piezometer — Depth to Groundwater: NR — Depth Drilled: 14.5 ft. — Total Depth: 16.0 ft.

Hammer Weight: 340 lbs — Split Spoon I.D.: 2.5 in. — Size and Type of Bit: 8 in. Hollow Stem Auger — Type of Equipment: CME-850 with Automatic Hammer — Type of Samples: Drive

Depth (ft.)	Sample Number	Sample Type	Recovery (in.)	PID (ppm)	USCS Symbol	Classification ASTM D 2487 or D 2488	Gravel %	Sand %	Fines %	Description and Remarks
										SURFACE: Gravel, snow to 19 inches
2			5 / 5400*		GP-GM	Poorly graded GRAVEL with Silt and Sand	45	44	11	4.8
4		NR	NFS*		CP	Poorly graded GRAVEL with Sand				1.5
6		Nbe	F4 / FS2		ML	SILT with Sand	2	24	74	18.4
8					SM	Silty SAND				
10					SP-SM	Poorly graded SAND with Silt	0	91	9	4.0
12										
14										
16		NRS*	4 / 5400		GW	Well-graded GRAVEL with Sand				2
18		NRS*	4 / 5400		SW	Well-graded SAND with Gravel				1
20										
22										
24										
26										
28										
30										
32										
34										

Coarse	Medium	Fine	Total Fines	Description and Remarks
				Brown, frozen, subangular to subrounded gravel, fine to coarse sand, nonplastic (NP) fines, HLL
0.0/0	0.0/0	0.0/0	0.0/0	Brown, frozen, subangular to subrounded gravel, fine to coarse sand, FS1
			24	Brown, frozen, fine sand, NP fines
			3	Brown, frozen, fine sand, NP fines
				Brown, moist, fine to medium sand, NP fines
				Brown, not staining, moist, angular to subrounded gravel, fine to coarse sand
				Brown to gray, wet, subangular to subrounded gravel, fine to coarse sand
				Bottom of Hole 16.0 ft. Elevation: 476.2 ft. Groundwater Not Recorded PID = (Cold/Hot) Photo Ionization Detector

* Indicates Estimated Frost Classification — Project: ATF Aircraft Parts Storage Facility (FTW336A) — Hole Number: AP-9696

ALASKA DISTRICT
CORPS OF ENGINEERS
ENGINEERING SERVICES

Soils and Geology Section
EXPLORATION LOG

Project: ATF Aircraft Parts Storage Facility (FTW336A), Fort Wainwright, Alaska — Page 1 of 1 — Date: 17 Apr 2008

Drilling Agency: ☒ Alaska District ☐ Other — Location: Northing 3,961,218 ft., Easting 1,391,222 ft. — Datum: Vertical NAVD88, Horizontal ASP23 NAD83

Hole Number, Field: TB-12 — Permanent: AP-9697 — Operator: Lyle Cain — Top of Hole Elevation: 492.1 ft. — Inspector: Robert Weakland

Type of Hole: ☐ other ☐ Test Pit ☒ Auger Hole ☐ Monitoring Well ☐ Piezometer — Depth to Groundwater: 14.4 ft. WD — Depth Drilled: 14.5 ft. — Total Depth: 16.0 ft.

Hammer Weight: 340 lbs — Split Spoon I.D.: 2.5 in. — Size and Type of Bit: 8 in. Hollow Stem Auger — Type of Equipment: CME-850 with Automatic Hammer — Type of Samples: Drive

Depth (ft.)	Sample Number	Sample Type	Recovery (in.)	PID (ppm)	USCS Symbol	Classification ASTM D 2487 or D 2488	Gravel %	Sand %	Fines %	Description and Remarks
										SURFACE: Gravel, snow to 19 inches
2			5 / 5400		GP-GM	Poorly graded GRAVEL with Silt and Sand	45	44	11	4.8
4		NR	NFS*		SW	Well-graded SAND with Gravel				2
6			F4 / FS2		ML	SILT with Sand	9	67	83	24.2
8					SP	Poorly graded SAND				
10										
12										
14			NFS*	4 / 5400	SW	Well-graded SAND with Gravel				1
16			NFS	4 / 5400	SP	Poorly graded SAND with Gravel	46	51	4	1.5
18										
20										
22										
24										
26										
28										
30										
32										
34										

Coarse	Medium	Fine	Total Fines	Description and Remarks
				Brown, frozen, subangular to subrounded gravel, fine to coarse sand, nonplastic (NP) fines, HLL
2	0.0/0	0.0/0	0.0/0	Brown, frozen, subangular to subrounded gravel, fine to coarse sand, FS1
			28	Brown, frozen, fine sand, NP fines
				Brown, moist, fine to medium sand, NP fines
1	0.0/0	0.0/0		Brown, moist, subangular to subrounded gravel, fine to coarse sand
1.5	0.0/0	0.0/0		Brown, wet, subangular to subrounded gravel, fine to coarse sand
				Bottom of Hole 16.0 ft. Elevation: 476.1 ft. Groundwater Encountered While Drilling, at an elevation of 477.7 ft. PID = (Cold/Hot) Photo Ionization Detector

* Indicates Estimated Frost Classification — Project: ATF Aircraft Parts Storage Facility (FTW336A) — Hole Number: AP-9697

NOT FOR CONSTRUCTION

BACKCHECK

US ARMY CORPS OF ENGINEERS
ALASKA DISTRICT

CONTRACT NO. ___
CONTRACTOR ___
CITY ___ STATE ___
PRIME CONTRACTOR: ___ Recommended: ___
RESIDENT ENGINEER: ___ Approved: ___ Date: ___

Mark	Action	Description	Date	Approd

U.S. ARMY ENGINEER DISTRICT
CORPS OF ENGINEERS
ANCHORAGE, ALASKA

Designed: MED
Drawn: J.S.D.
Reviewed: T. Lubeck
Chief — GEOG-TA-FE-GS — Section
Submitted: D. Frenier — Branch
Date: 16 JULY 2009
Dwg Scale: AS NOTED
Plot Scale: 1:2
File: FTW336A-006-C0-02
Drawing No. F-211-13-01

INV. NO. W911KB-09-R-0007
PN 65076
FTW336A

FT. WAINWRIGHT, ALASKA
AIRCRAFT PARTS STORAGE
CIVIL
GENERAL
SOIL BORING LOGS 2 OF 2

Reference number: C0.02

Drawing x:\UNIFIED\EN-TE\Jobs\FTW336A\Dwgs\FTW336A-006-C0-02.dwg last saved on 5/6/2009 5:16 PM was plotted by Curfew, Donald L POA on 7/17/2009 6:30 AM

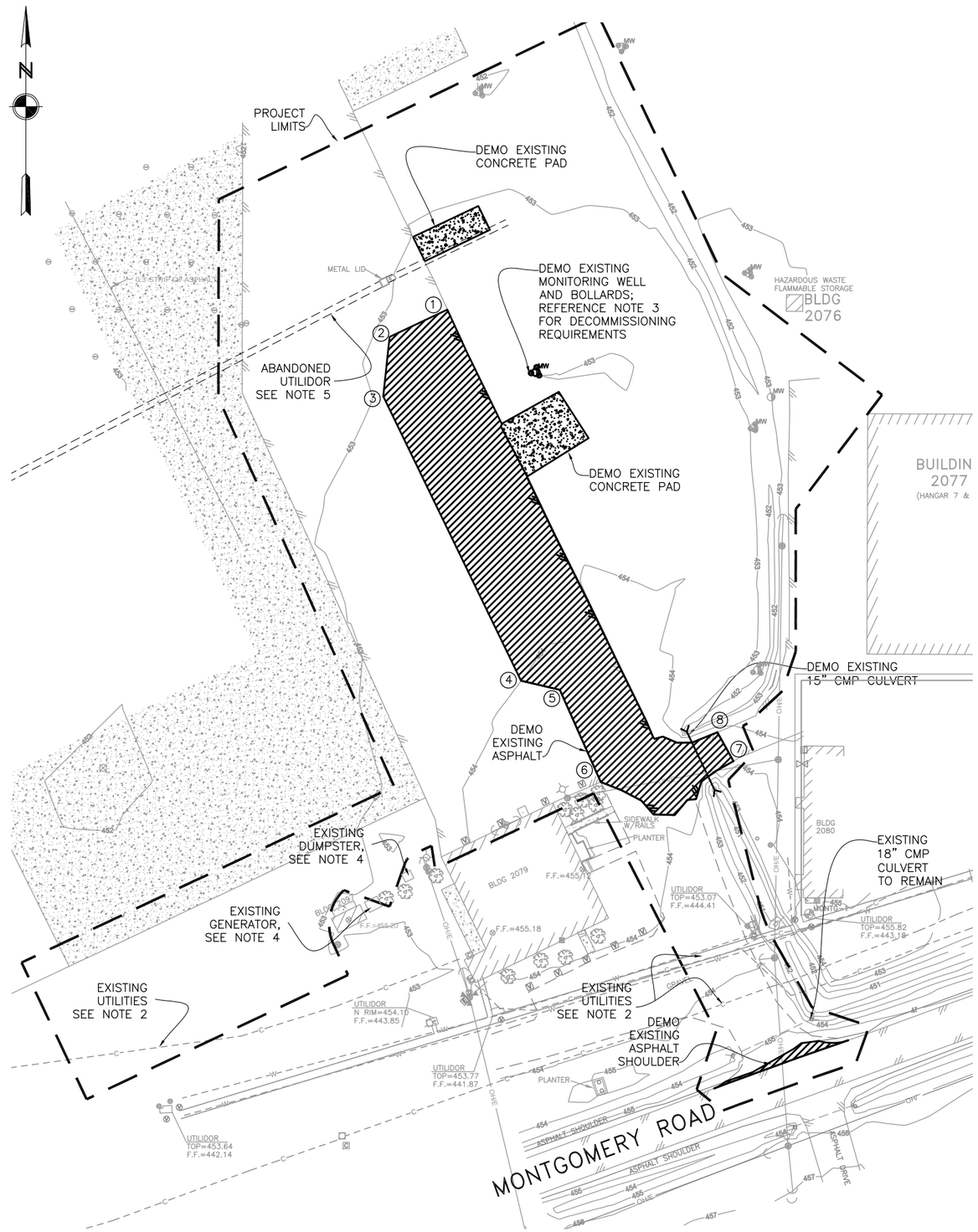

DEMOLITION PLAN

1" = 40'

0 20 40 80 120 160

GRAPHIC SCALE

NOTES:

1, SEE SHEET C1.01 FOR PROJECT LIMITS.

2. EXISTING UTILITIES (I.E. DIRECT BURIED UTILITIES, UTILITIES IN UTILIDOR, ETC.) LOCATED UNDERNEATH THE ACCESS ROAD TO BE PAVED AND PARKING AREA SHALL REMAIN. THE CONTRACTOR SHALL PROTECT EXISTING UTILITIES FROM DAMAGE. WHEN EXISTING UTILITIES ARE ENCOUNTERED OR DAMAGED DURING THE CONSTRUCTION OF THIS PROJECT THE CONTRACTOR SHALL IMMEDIATELY CONTACT DOYON UTILITIES FOR SEWER, STEAM, CONDENSATE, WATER AND POWER; COMM LINES CONTACT THE CONTRACTING OFFICER.

3. WELL DECOMMISSIONING PER ADEC (ALASKA DEPARTMENT OF ENVIRONMENTAL CONSERVATION:

A.) REMOVE THE ENTIRE WELL CASING AND SCREEN.

B.) FILL THE BOREHOLE WITH GROUT AFTER CASING IS REMOVED.

C.) PIPE SEALING MATERIALS DIRECTLY TO THE POINT OF APPLICATION OR EMPLACE BY MEANS OF A DUMP BAILER OR TREMIE TUBE.

D.) IF USING CEMENT GROUT, NEAT CEMENT, OR PUDDLED CLAY AS SEALING MATERIALS BELOW THE STATIC WATER LEVEL IN THE WELL, INTRODUCE FROM THE BOTTOM UP.

E.) WHEN USING A TREMIE TUBE TO PLACE GROUT, SUBMERGE THE DISCHARGE END IN THE GROUT TO AVOID BREAKING THE SEAL WHILE FILING THE ANNULAR SPACE.

F.) FOR ARTESIAN WELLS, PLACE A CEMENT GROUT OR CONCRETE PLUG IN THE CONFINING STRATUM OVERLYING THE ARTESIAN ZONE TO PREVENT UPWARD SEEPAGE FROM THE ARTESIAN ZONE. FILL THE REMAINDER OF THE WELL WITH CEMENT GROUT OR BENTONITE.

G.) RECORD DECOMMISSIONING PROCEDURES AND REPORT TO ADEC.

4. EXISTING DUMPSTER ON SKIDS AND AN EXISTING GENERATOR ON PLATFORM ARE TO REMAIN ON SITE.

5. AN ABANDONED UTILIDOR RUNS PERPENDICULAR TO THE PROJECT SITE. AS-BUILTS SHOW IT AS A 6 FT X 4 FT CONCRETE UTILIDOR. CONTENTS WITHIN THE UITLIDOR ARE UNKNOWN. THE CONTRACTOR SHALL IMMEDIATELY CONTACT THE CONTRACTING OFFICER IF THE EXISTING UTILIDOR IS ENCOUNTERED DURING THE CONSTRUCTION OF THIS PROJECT. LOCATION OF THIS UTILIDOR SHOWN IS ONLY APPROXIMATE.

SUMMARY DATA

LABEL #	NORTHING	EASTING
1	3961724.95	1391425.65
2	3961707.74	1391389.25
3	3961670.25	1391385.21
4	3961490.84	1391472.12
5	3961485.11	1391496.54
6	3961427.01	1391522.39
7	3961440.13	1391606.03
8	3961458.32	1391595.86

LEGEND

EXISTING / DEMO

- SURVEY MONUMENT
- TREE
- POWER POLE
- GUY ANCHOR
- POWER POLE W/LIGHT
- TRANSFORMER
- JUNCTION BOX
- ELECTRIC PEDESTAL
- VEHICLE HEATER OUTLET
- COMMUNICATION PEDESTAL
- FIRE HYDRANT
- STORM DRAIN
- VENT PIPE
- CULVERT
- GUARD POST/BOLLARD
- AUGER POINT
- MONITORING WELL
- FINISH FLOOR
- AIRCRAFT TIE DOWN
- OH/E — OVERHEAD ELECTRIC
- C — COMMUNICATION LINE
- W — WATER LINE
- EDGE OF PAVEMENT
- EDGE OF GRAVEL
- BUILDING
- CONCRETE
- 101 — MINOR CONTOUR
- 100 — MAJOR CONTOUR
- XXX.XX — SPOT ELEVATION
- PROJECT LIMITS
- ABANDONED UTILIDOR
- EXISTING UTILIDOR

US ARMY CORPS OF ENGINEERS
ALASKA DISTRICT

CONTRACT NO. ___
CONTRACTOR ___
CITY ___ STATE ___
PRIME CONTRACTOR ___ Recommended: ___
RESIDENT ENGINEER ___ Approved: ___ Date: ___

Symb	Action	Description	Date	Appvd

U.S. ARMY ENGINEER DISTRICT
CORPS OF ENGINEERS
ANCHORAGE, ALASKA

Designed: MED
Drawn: MED
Reviewed: T. Lubeck
Chief – Cofnoa-Dir-Tl-Cs – Section
Submitted: D. Frenier
Chief – Cofnoa-Dir-Tl-Cs – Section
Date: 16 JULY 2009
Dwg Scale: AS NOTED
Plot Scale: 1:2
File: FTW336A-007-D1-01
Drawing: F-F-211-13-01

INV. NO. W911KB-09-R-0007
PN 65076
FTW336A

FT. WAINWRIGHT, ALASKA
AIRCRAFT PARTS STORAGE
CIVIL
PLANS
DEMOLITION PLAN

Reference number:
D1.01

NOT FOR CONSTRUCTION
BACKCHECK

Drawing x:\UNIFIED\EN-TE\Jobs\FTW336A\Dwgs\FTW336A-007-D1-01.dwg last saved on 7/15/2009 10:29 AM was plotted by Curfew, Donald L POA on 7/17/2009 6:35 AM

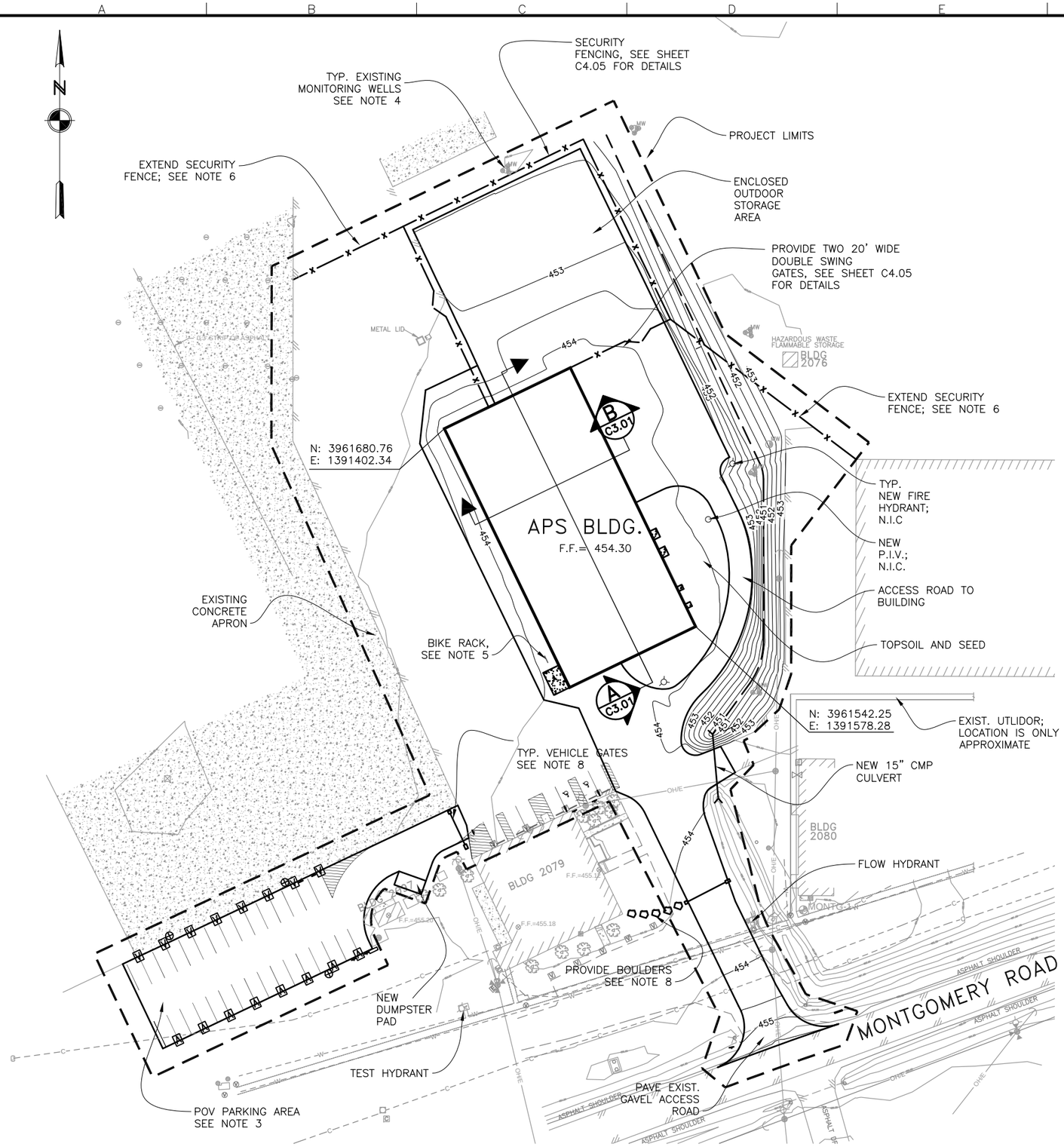

OVERALL SITE PLAN

1" = 40'

0 20 40 80 120 160

GRAPHIC SCALE

NOTES:

1. SEE SHEET D1.01 FOR LEGEND FOR EXISTING AND SHEET C2.02 FOR NEW.

2. PERMANENT UTILTIY SYSTEMS (WATER, SEWER, STEAM AND CONDENSATE AND ELECTRICITY) TO THIS FACILITY WILL BE DESIGNED AND INSTALLED BY DOYON UTILITIES (DU) UP TO THE DEMARCATION POINTS.

POINTS OF DEMARCATION (POD) ARE AS FOLLOWS:
– WATER: POD IS THE DISTRIBUTION SIDE OF THE FIRST VALVE AFTER THE METER. WHERE DU PROVIDES FOR FIRE SERVICE LINES COMBINED WITH BUILDING SERVICE WATER LINES, THE POD FOR THE FIRE SERVICE IS THE DOWNSTREAM SIDE OF THE FIRST COUPLING AFTER THE FIRE SERVICE LINE SPLITS FROM THE WATER SERVICE LINE INSIDE THE FACILITY; THE POD FOR THE WATER SERVICE LINE REMAINS AT THE DISTRIBUTION SIDE OF THE FIRST VALVE AFTER THE FIRST METER.
– SEWER: POD IS UPSTREAM OF THE FIRST CLEANOUT OUTSIDE THE BUILDING. THE CONTRACTOR SHALL PROVIDE THE CLEANOUT UNLESS DU AND THE GOVERNMENT DETERMINE A CLEANOUT IS NOT NEEDED, IN WHICH CASE THE POD IS WHERE THE SERVICE LINE EXITS THE STRUCTURE. SEE MECHANICAL FOR LOCATION OF CLEANOUT.
– STEAM: POD IS AT THE DISTRIBUTION SIDE OF THE FIRST VALVE AFTER THE METER.
– CONDENSATE: POD IS IMMEDIATELY AFTER THE GATE VALVE (OR CHECK VALVE IF NO GATE VALVES ARE PRESENT) DOWNSTREAM FROM THE FACILITY'S CONDENSATE PUMPS.
–POWER TO FACILITY: A METER AND DISCONNECTING MEANS WILL BE PROVIDED AND INSTALLED BY DU ON THE EXTERIOR OF THE STRUCTURE. THE LOAD SIDE OF THE DISCONNECTING MEANS IN THE POD FOR ELECTRICAL POWER.

3. PROVIDE 31 POV PARKING SPACES. SEE SHEET C2.02 FOR NEW PARKING AREA REQUIREMENTS.

4. PROTECT EXISTING MONITORING WELLS TO REMAIN ON SITE. MONITORING WELLS THAT HAVE BEEN DAMAGED DURING THE CONSTRUCTION OF THIS PROJECT SHALL BE REPLACED BY THE CONTRACTOR AT NO COST TO THE GOVERNMENT.

5. PROVIDE A BICYCLE RACK; REFERENCE SPECIFICATION 12 93 00 SITE FURNISHINGS FOR BICYCLE RACK REQUIREMENTS AND SHEET C4.03 FOR DETAIL.

6. PROVIDE SECURITY FENCING FROM THE NORTHWEST CORNER OF THE ENCLOSED OUTSIDE PARTS STORAGE AREA FENCE LINE TO EDGE OF CONCRETE APRON; CONNECT TO FENCE TO BE INSTALLED UNDER FTW336D IF IT IS IN PLACE WHEN FENCE IN THIS CONTRACT IS INSTALLED. PROVIDE SECURITY FENCING FROM A POINT 6–INCHES OFF THE NORTHWEST CORNER OF BUILDING 2077 (HANGAR 7 & 8) TO THE SOUTHEAST CORNER OF THE ENCLOSED OUTSIDE PARTS STORAGE AREA FENCE LINE. BUILDING 2077 SHOWN ON THIS SHEET AND ON SHEET C2.01 IS ONLY APPROXIMATE. EXACT LOCATION OF THE FENCE IN THIS AREA WILL BE FIELD VERIFIED AND COORDINATED WITH CONTRACTING OFFICER; COORDINATES, DIMENSIONS, PROVIDED ARE ONLY APPROXIMATE.

7. BUILDINGS 2097, 2079 AND 2077 WILL REMAIN OPERATIONAL DURING THE CONSTRUCTION OF THE AIRCRAFT PARTS STORAGE BUILDING, PARKING AREA AND ACCESS ROAD. THE CONTRACTOR SHALL COORDINATE WITH THE CONTRACTING OFFICER TO ESTABLISH ENTRY/EXIT INTO PROJECT SITES; TEMPORARY CONSTRUCTION BARRICADES; ETC.

8. THE CONTRACTOR SHALL PROVIDE TWO DROP DOWN VEHICLE GATES AT THE ACCESS ROAD TO THE PARKING AREA AND AT THE ACCESS ROAD OFF OF MONTGOMERY ROAD. THE VEHICLE GATE WILL BE DSC7000 DELTA SCIENTIFIC GATE OR EQUAL. THE VEHICLE GATE SHALL BE A DS (DIPLOMATIC SECURITY) CERTIFIED ANTI–RAM VEHICLE BARRIER. THE ACCESS ROAD FROM MONTGOMERY; PROVIDE BOULDERS FROM THE VEHICLE GATE TO THE SOUTHEAST CORNER OF BUILDING 2079; SEE SHEET C4.02 FOR BOULDER DETAIL.

NOT FOR CONSTRUCTION
BACKCHECK

US ARMY CORPS OF ENGINEERS
ALASKA DISTRICT

CONTRACT NO. ____
CONTRACTOR ____
CITY ____ STATE ____
PRIME CONTRACTOR ____
Recommended: ____
RESIDENT ENGINEER ____
Approved: ____
Date: ____

Symb	Action	Description	Date	Appvd

U.S. ARMY ENGINEER DISTRICT
CORPS OF ENGINEERS
ANCHORAGE, ALASKA

Designed: MED
Drawn: MED
Reviewed: T. Lubeck
Chief: ____ Section
Submitted: D. Frenier
Chief: ____ Section
Date: 16 JULY 2009
Dwg Scale: AS NOTED
Plot Scale: 1:2
File: FTW336A-008-C1-01
Drawing #: F-2-211-13-01
Contract No.: W911KB-09-R-0007
PN 65076
FTW336A

FT. WAINWRIGHT, ALASKA
AIRCRAFT PARTS STORAGE
CIVIL
PLANS
OVERALL SITE PLAN

Reference number:
C1.01

Drawing x:\UNIFIED\EN-TE\Jobs\FTW336A\Dwgs\FTW336A-008-C1-01.dwg last saved on 7/15/2009 10:40 AM was plotted by Curfew, Donald L POA on 7/17/2009 6:35 AM

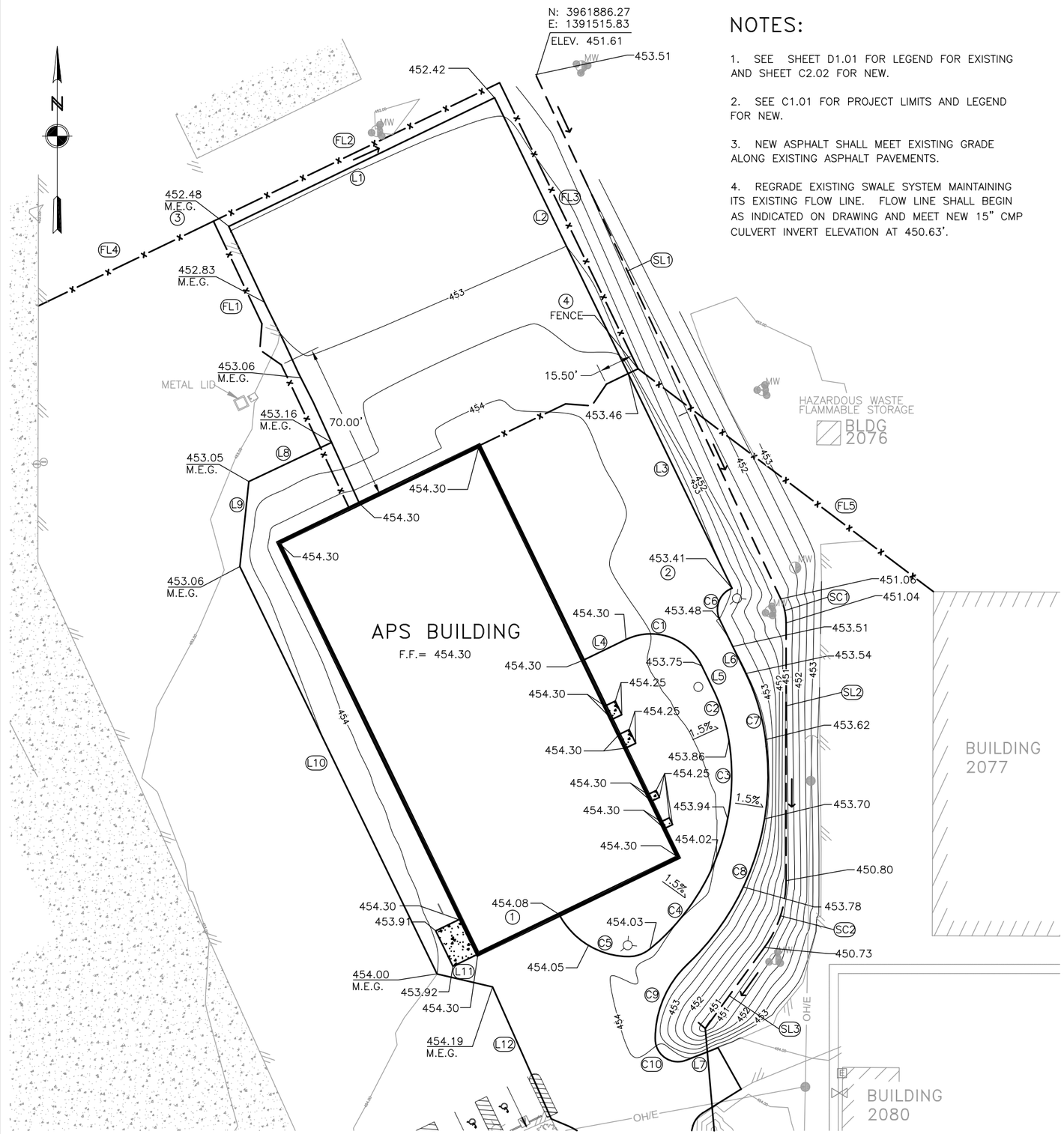

BUILDING AREA GRADING PLAN

1" = 25'

NOTES:

1. SEE SHEET D1.01 FOR LEGEND FOR EXISTING AND SHEET C2.02 FOR NEW.

2. SEE C1.01 FOR PROJECT LIMITS AND LEGEND FOR NEW.

3. NEW ASPHALT SHALL MEET EXISTING GRADE ALONG EXISTING ASPHALT PAVEMENTS.

4. REGRADE EXISTING SWALE SYSTEM MAINTAINING ITS EXISTING FLOW LINE. FLOW LINE SHALL BEGIN AS INDICATED ON DRAWING AND MEET NEW 15" CMP CULVERT INVERT ELEVATION AT 450.63'.

CURVES

LABEL #	LENGTH	RADIUS	Δ
C1	39.27	25.00	90.00
C2	28.25	78.64	20.52
C3	98.22	98.00	57.43
C4	10.58	15.00	40.42
C5	36.32	35.00	59.46
C6	15.71	10.00	90.00
C7	33.60	94.73	20.33
C8	105.87	114.00	53.21
C9	36.33	45.18	46.07
C10	19.92	10.00	114.11

LINES

LABEL #	LENGTH	BEARING
FL1	139.96	N25° 18' 24.48" W
FL2	140.01	N64° 10' 06.34" E
FL3	140.00	S25° 49' 53.67" E
FL4	49.95	N25° 18' 24.48" W
FL5	162.92	N64° 10' 06.34" E
L1	162.92	N64° 10' 06.34" E
L2	135.00	S25° 49' 53.67" E
L3	105.00	S25° 49' 53.67" E
L4	21.06	S64° 10' 06.33" W
L5	11.49	N25° 49' 53.69" W
L6	26.49	N25° 49' 53.69" E
L7	15.00	N68° 38' 15.47" E
L8	25.12	S64° 00' 50.61" W
L9	25.16	S64° 00' 50.61" W
L10	48.15	S00° 00' 00.00" W
L11	25.09	S76° 48' 29.61" E
L12	63.59	N23° 58' 56.01" W

SWALE DATA INFORMATION

CURVES

LABEL #	LENGTH	RADIUS	Δ
SC1	10.93	25.00	25.05
SC2	31.47	50.00	36.06

LINES

LABEL #	LENGTH	BEARING
SL1	254.16	S25° 03' 12.82" E
SL2	113.53	S00° 00' 00.00" E
SL3	44.17	S36° 03' 22.88" W

SUMMARY DATA

LABEL #	DESCRIPTION	NORTHING	EASTING
1	EDGE OF PAVEMENT	3961516.30	1391526.28
2	EDGE OF PAVEMENT	3961660.75	1391602.02
3	EDGE OF PAVEMENT	3961876.77	1391497.44
4	FENCE	3961757.39	1391560.66

CONCRETE LANDINGS DATA

LOCATION	SIZE	NORTHING	EASTING
MAIN ENTRY	17.33' X 12.50'	3961499.55	1391490.12
ENTRANCE TO FIRE PUMP ROOM	5.00' X 6.67'	3961602.86	1391548.99
ENTRANCE TO MECHANICAL ROOM	5.00' X 6.67'	3961590.26	1391555.09
ENTRANCE TO ELECTRICAL ROOM	4.00' X 3.33'	3961566.86	1391566.41
EXIT DOOR FROM VESTIBULE	4.00' X 3.33'	3961554.86	1391572.22

NOT FOR CONSTRUCTION

BACKCHECK

US ARMY CORPS OF ENGINEERS
ALASKA DISTRICT

CONTRACT NO. ____
CONTRACTOR ____
CITY ____ STATE ____
PRIME CONTRACTOR ____
Recommended: ____
RESIDENT ENGINEER ____
Approved: ____
Date: ____

Symb	Action	Description	Date	Appvd

U.S. ARMY ENGINEER DISTRICT
CORPS OF ENGINEERS
ANCHORAGE, ALASKA

Designed: MED
Dwn: MED
Reviewed: T. Lubeck
Chief – Cadd – Section
Submitted: D. Frenier
Chief – Design – Section
Date: 16 JULY 2009
Dwg Scale: AS NOTED
Plot Scale: 1:2
File: FTW336A-009-C2-01
Drawing # F-211-13-01

INV. NO. W911KB-09-R-0007
PN 65076
FTW336A

FT. WAINWRIGHT, ALASKA
AIRCRAFT PARTS STORAGE
CIVIL
PLANS
BUILDING AREA GRADING PLAN

Reference number:
C2.01

Drawing x:\UNIFIED\EN-TE\Jobs\FTW336A\Dwgs\FTW336A-009-C2-01.dwg last saved on 7/15/2009 10:31 AM was plotted by Curfew, Donald L POA on 7/17/2009 6:35 AM

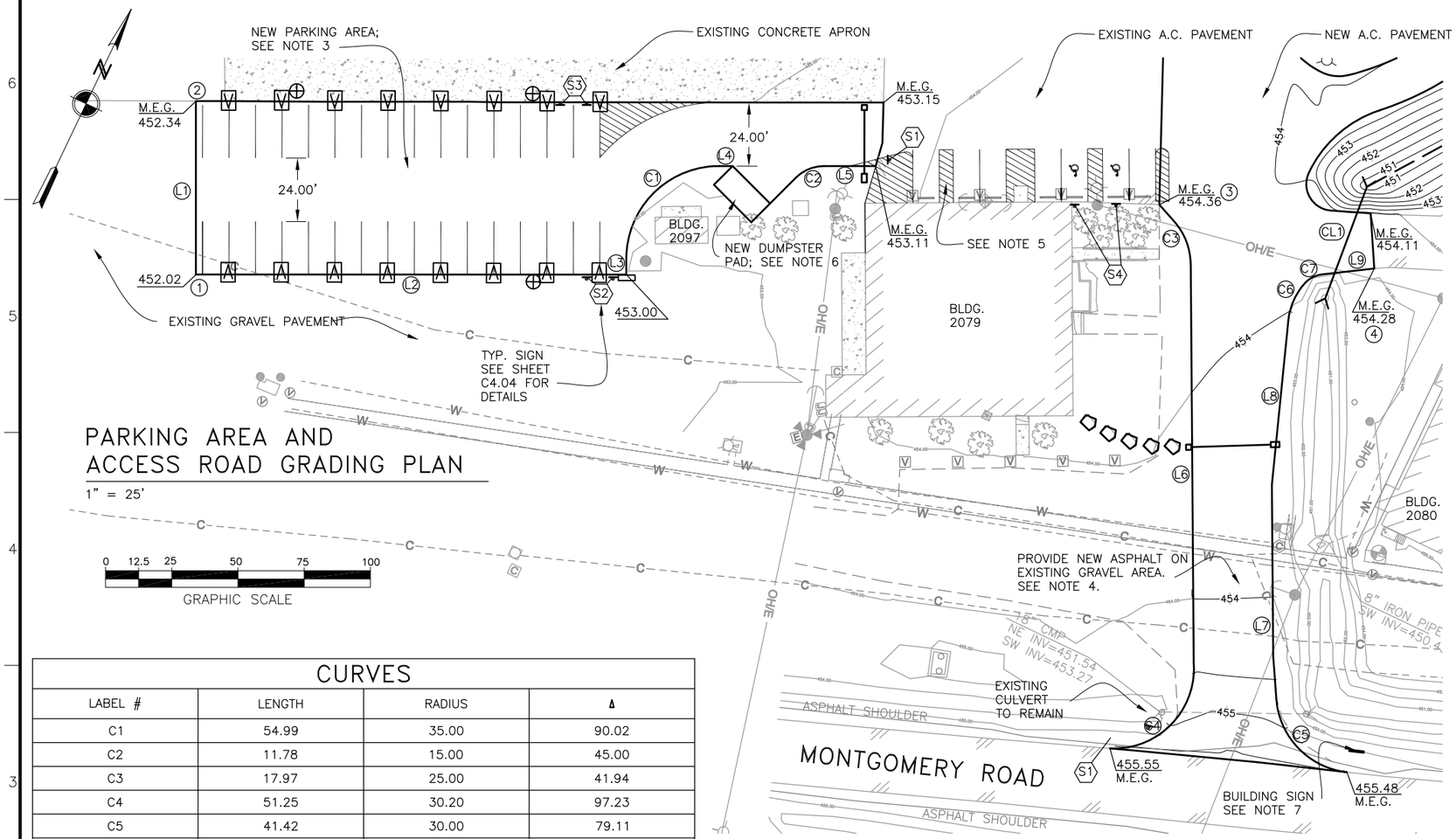

PARKING AREA AND ACCESS ROAD GRADING PLAN

1" = 25'

NOTES:

1. SEE SHEET D1.01 FOR LEGEND FOR EXISTING.
2. SEE C1.01 FOR PROJECT LIMITS.
3. PARKING AREA: NEW ASPHALT SHALL MEET EXISTING GRADE ALONG THE EXISTING CONCRETE APRON (NORTH) AND ALONG THE EXISTING A.C. PAVEMENT (EAST). SEE SHEET C4.03 FOR PAVEMENT MARKINGS DETAIL.
4. ACCESS ROAD: PROVIDE NEW ASPHALT FROM MONTGOMERY ROAD TO AIRCRAFT PARTS STORAGE BUILDING AS SHOWN. NEW ASPHALT SHALL TIE INTO EXISTING GRAVEL ALONG THE WEST SIDE OF THE ACCESS ROAD AND MEET EXISTING GRADE. EXCAVATE EXISTING ROAD TO PLACE AND COMPACT MINIMUM 2" AGGREGATE BASE LEVELING COURSE PLUS 2" ASPHALT PAVEMENT.
5. NEW WORK NORTH OF BUILDING 2079 SHALL CONSIST OF ONLY PROVIDING PAVEMENT MARKINGS. REFERENCE SHEET C4.03 FOR PAVEMENT MARKING AND PARKING BUMPER DETAILS.
6. SEE SHEET C4.02 FOR DUMPSTER PAD AND ENCLOSURE DETAILS.
7. THE BUILDING SIGN SHALL BE RELOCATED FROM BUILDING 3475 TO THE LOCATION SHOWN ON THIS SHEET. AFTER THE REMOVAL OF THE EXISTING SIGN; THE CONTRACTOR SHALL FILL ANY HOLES WITH UNCLASSIFIED FILL TO EXISTING GRADE AND TOPSOIL AND SEED DISTURBED AREAS.
8. DO NOT PLACE HANDICAP POSTS IN CONCRETE APRON.
9. PROVIDE A THAW PIPE FOR THE NEW 15" CMP CULVERT; SEE SHEET C4.06 FOR DETAILS.

CURVES

LABEL #	LENGTH	RADIUS	Δ
C1	54.99	35.00	90.02
C2	11.78	15.00	45.00
C3	17.97	25.00	41.94
C4	51.25	30.20	97.23
C5	41.42	30.00	79.11
C6	15.93	25.00	36.50
C7	7.08	10.00	40.59

LINES

LABEL #	LENGTH	BEARING
L1	65.47	S25° 27' 02.80" E
L2	162.50	S64° 32' 57.20" E
L3	5.97	S25° 27' 02.80" E
L4	16.43	N64° 34' 31.35" E
L5	19.52	N64° 34' 31.35" E
L6	150.17	N25° 53' 40.10" W
L7	64.64	N25° 53' 40.10" W
L8	62.27	N19° 44' 45.53" W
L9	20.04	N58° 01' 49.89" E

SUMMARY DATA

LABEL #	DESCRIPTION	NORTHING	EASTING
1	EDGE OF PAVEMENT	3961296.59	1391309.82
2	EDGE OF PAVEMENT	3961301.99	1391307.20
3	EDGE OF PAVEMENT	3961427.01	1391522.39
4	EDGE OF PAVEMENT	3961440.13	1391606.03

CULVERT SUMMARY DATA

LABEL #	LENGTH	MATERIAL	PIPE SIZE	INVERT ELEVATION	NORTHING	EASTING
CL1	50'	CMP	15"	450.63 (N)	3961296.59	1391309.82
				450.38 (S)	3961301.99	1391307.20

LEGEND

NEW BUILDING
NEW A.C. PARKING/ PAVEMENT
NEW FENCE LINE/GATE
SWALE
DATA SUMMARY MARKER
SIGNAGE MARKER
SIGN
CONCRETE LANDINGS/ DUMPSTER PAD
PROPOSED FIRE HYDRANT LOCATION; N.I.C.
PROPOSED PIV LOCATION; N.I.C.

MINOR CONTOUR
MAJOR CONTOUR
M.E.G. — MEET EXISTING GRADE
N.I.C. — NOT IN CONTRACT
CULVERT
PROJECT LIMITS
HEAD BOLT HEATER SEE ELECTRICAL
FUTURE LIGHTING; N.I.C. SEE ELECTRICAL
VEHICLE GATE
BOULDERS

NOT FOR CONSTRUCTION
BACKCHECK

US ARMY CORPS OF ENGINEERS
ALASKA DISTRICT

CONTRACT NO. ___
CONTRACTOR ___
CITY ___ STATE ___
PRIME CONTRACTOR ___
Recommended: ___
RESIDENT ENGINEER ___
Approved: ___
Date: ___

Mod.	Action	Description	Date	Approd

U.S. ARMY ENGINEER DISTRICT
CORPS OF ENGINEERS
ANCHORAGE, ALASKA

Designed: MED
Drawn: MED
Reviewed: T. Lubeck
Chief: ___ Section
Submitted: D. Freiner
Chief: ___ Branch
Date: 16 JULY 2009
Dwg. Scale: AS NOTED
Plot Scale: 1:2
File: FTW336A-010-C2-02
Drawing: N/A F-211-13-01

PN 65076
INV. NO. W911KB-09-R-0007
FTW336A

FT. WAINWRIGHT, ALASKA
AIRCRAFT PARTS STORAGE
CIVIL
PLANS
PARKING AREA GRADING PLAN

Reference number:
C2.02

Drawing x:\UNIFIED\EN-TE\Jobs\FTW336A\Dwgs\FTW336A-010-C2-02.dwg last saved on 7/15/2009 10:53 AM was plotted by Curfew, Donald L POA on 7/17/2009 6:35 AM

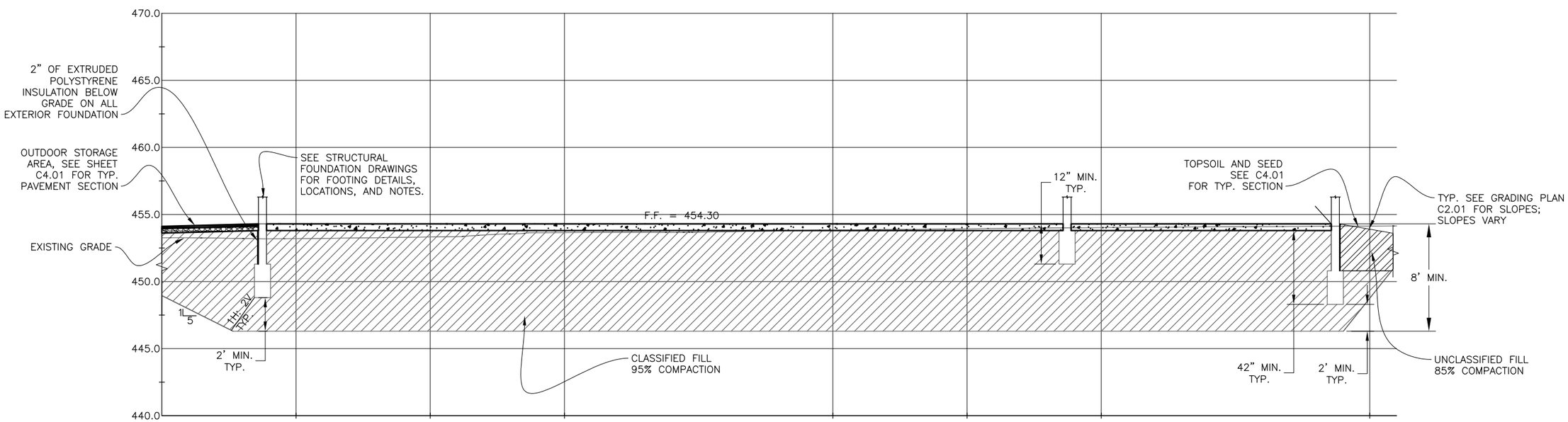

A
C1.01 C3.01

BUILDING EARTHWORK SECTION (N–S)

1" = 10' HORIZONTAL
1" = 4' VERTICAL

0 5 10 20 30 40
GRAPHIC SCALE

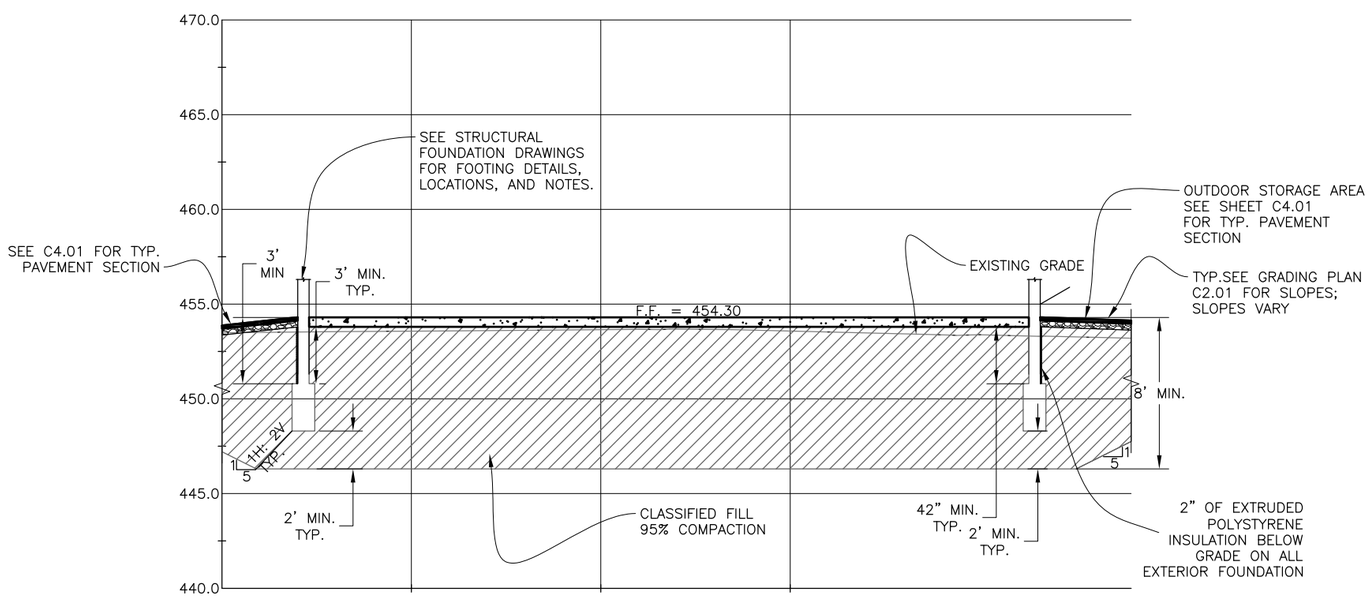

B
C2.01 C3.01

BUILDING EARTHWORK SECTION (W–E)

1" = 10' HORIZONTAL
1" = 4' VERTICAL

0 5 10 20 30 40
GRAPHIC SCALE

NOTES:

1. EXCAVATION SIDE SLOPES SHALL BE AS STEEP AS POSSIBLE AND SHALL CONFORM TO THE LATEST EDITION OF THE CORPS "SAFETY AND HEALTH REQUIREMENTS MANUAL", EM 385–1–1.

2. SLOPES OF 5H;1V ARE REQUIRED FOR FROST TRANSITIONS BENEATH PAVED AND CONCRETE AREAS.

3. THE MINIMUM DEPTH IS 8 FEET AS SHOWN ON EARTHWORK SECTION "A" AND "B". THE MINIMUM EXCAVATION LIMIT ELEVATION IS 446.00 FEET. THE WATER TABLE IS APPROXIMATELY 439 FEET.

NOT FOR CONSTRUCTION
BACKCHECK

US ARMY CORPS OF ENGINEERS
ALASKA DISTRICT

CONTRACT NO. _____
CONTRACTOR _____
CITY _____ STATE _____
PRIME CONTRACTOR _____
Recommended: _____
RESIDENT ENGINEER _____
Approved: _____
Date: _____

Dwg Action	Description	Date	Appvd

U.S. ARMY ENGINEER DISTRICT
CORPS OF ENGINEERS
ANCHORAGE, ALASKA

Designed: MED
Drawn: MED
Reviewed: T. Lubeck
Chief – Cons-Div-Br-25 – Section
Submitted: D. Frenter
Chief – Cons-Div-Br-25 – Section
Date: 16 JULY 2009
Dwg Scale: AS NOTED
Plot Scale: 1:2
File: FTW336A-011-C3-01
Drawing # F-211-13-01

INV. NO. W911KB-09-R-0007
PN 65076
FTW336A

FT. WAINWRIGHT, ALASKA
AIRCRAFT PARTS STORAGE
CIVIL
PLANS
BUILDING EARTHWORK SECTIONS

Reference number:
C3.01

Drawing x:\UNIFIED\EN-TE\Jobs\FTW336A\Dwgs\FTW336A-011-C3-01.dwg last saved on 7/15/2009 10:37 AM was plotted by Curfew, Donald L POA on 7/17/2009 6:35 AM

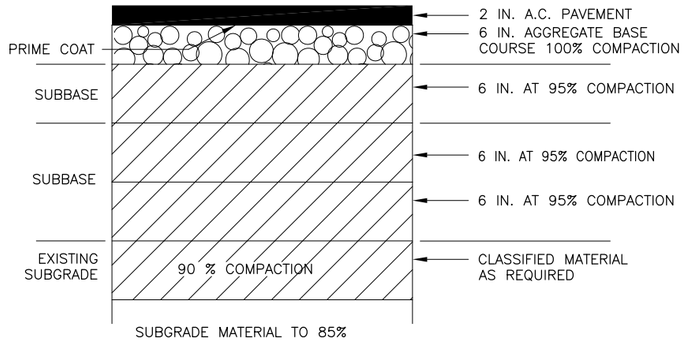

TYPCIAL A.C. PAVEMENT SECTION

N.T.S.

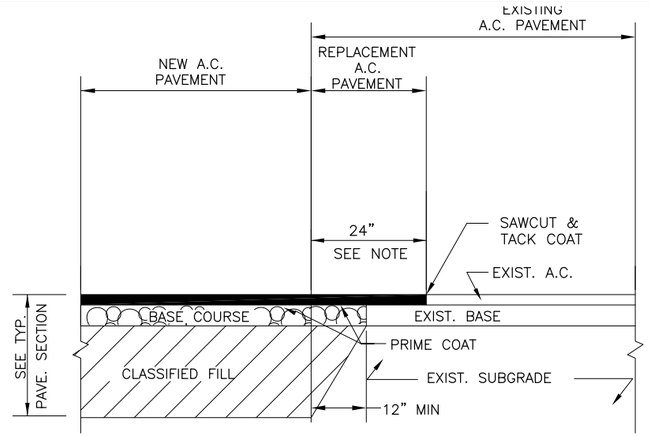

NOTE: AFTER BACKFILL IS IN PLACE, SAWCUT AND REMOVE EXISTING PAVEMENT. COMPACT EXISTING BASE TO 100% PRIOR TO PLACING NEW PAVEMENT.

TYPCIAL PAVEMENT TIE-IN DETAIL

N.T.S.

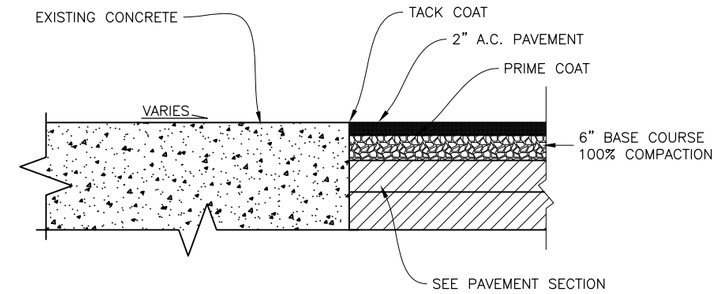

CONCRETE/PAVEMENT SECTION DETAIL

N.T.S.

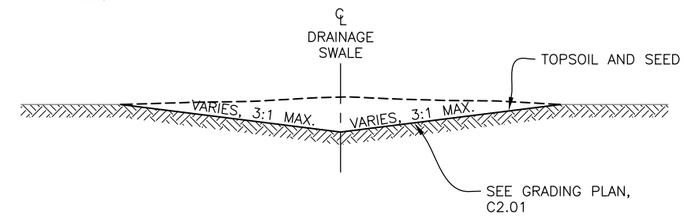

TYP. SWALE

N.T.S.

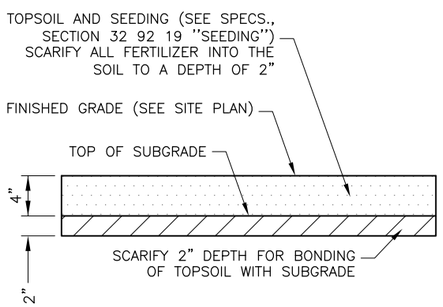

TYPICAL TOPSOIL AND SEEDING SECTION

NTS

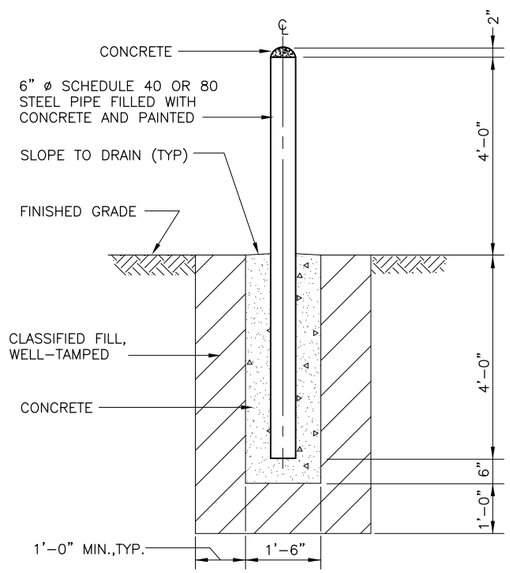

NOTE: POSTS SHALL BE PRIMED AND RECEIVE TWO COATS MINIMUM OF "SAFETY YELLOW" PAINT IN ACCORDANCE WITH MANUFACTURERS'S RECOMMENDATIONS.

TYP. BOLLARD DETAIL

NTS

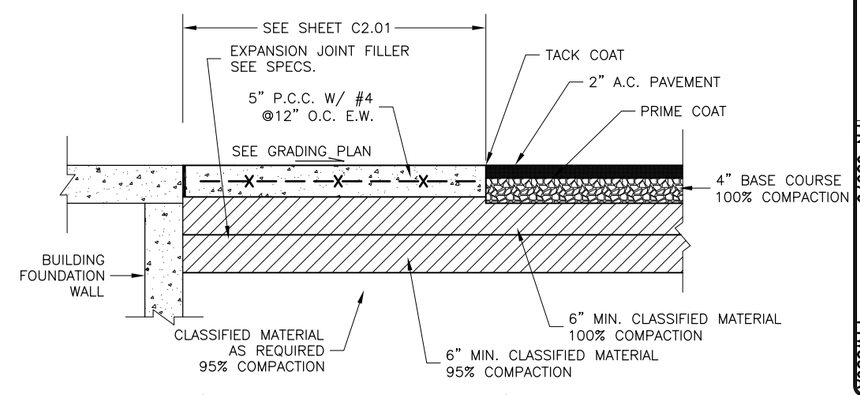

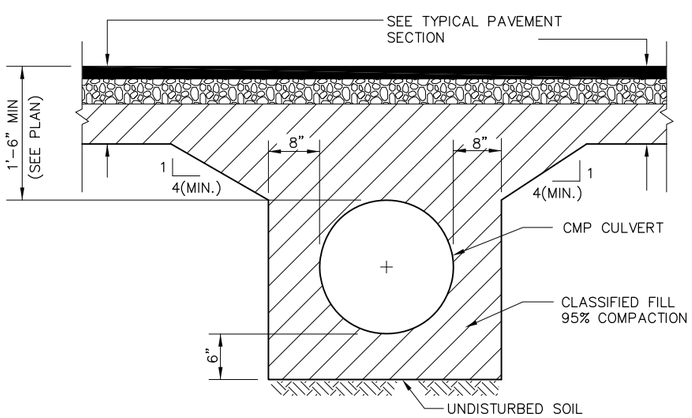

NOTE: CULVERTS SHALL BE CORRUGATED GALVANIZED STEEL PIPE 0.079"(MIN.) THICK WITH 2-2/3"x 1/2"(MIN.) CORRUGATIONS OR ALUMINUM CORRUGATED PIPE, 10 STANDARD GAUGE WITH 2-2/3"x 1/2" CORRUGATIONS.

CULVERT TRENCH SECTION

NTS

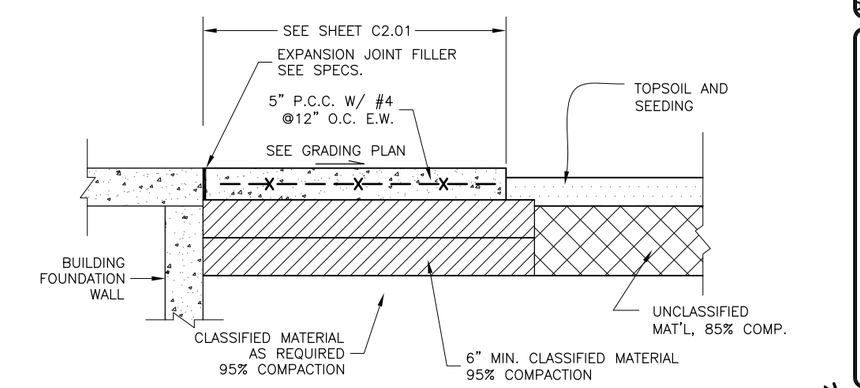

CONCRETE LANDINGS

N.T.S.

NOT FOR CONSTRUCTION

BACKCHECK

US ARMY CORPS OF ENGINEERS
ALASKA DISTRICT

CONTRACT NO.
CONTRACTOR
CITY
STATE
PRIME CONTRACTOR
Recommended:
RESIDENT ENGINEER
Approved:
Date:

Symb	Action	Description	Date	Appvd

U.S. ARMY ENGINEER DISTRICT
CORPS OF ENGINEERS
ANCHORAGE, ALASKA

Designed: MED
Drawn: MED
Reviewed: T. Lubeck
Submitted: D. Frenter
Date: 16 JULY 2009
Dwg Scale: AS NOTED
Plot Scale: 1:2
Plot: FTW336A_012-C4-01
Drawing #: F-211-13-01

CONTRACT NO. W911KB-09-R-0007
PN 65076
FTW336A

FT. WAINWRIGHT, ALASKA
AIRCRAFT PARTS STORAGE
CIVIL
DETAILS
EARTHWORK DETAILS

Reference number:
C4.01

Drawing x:\UNIFIED\EN-TE\Jobs\FTW336A\Dwgs\FTW336A-012-C4-01.dwg last saved on 7/15/2009 10:56 AM was plotted by Curfew, Donald L POA on 7/17/2009 6:35 AM

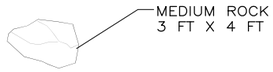

PLAN VIEW

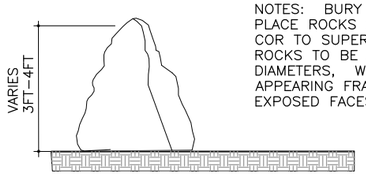

SECTION VIEW

NOTES: BURY ROCKS 1/3 –1/2. PLACE ROCKS 2.50FT–3.00FT APART COR TO SUPERVISE PLACEMENT. ROCKS TO BE ANGULAR, VARIED DIAMETERS, WITH NATURAL APPEARING FRACTURES AND EXPOSED FACES.

BOULDER DETAIL

N.T.S.

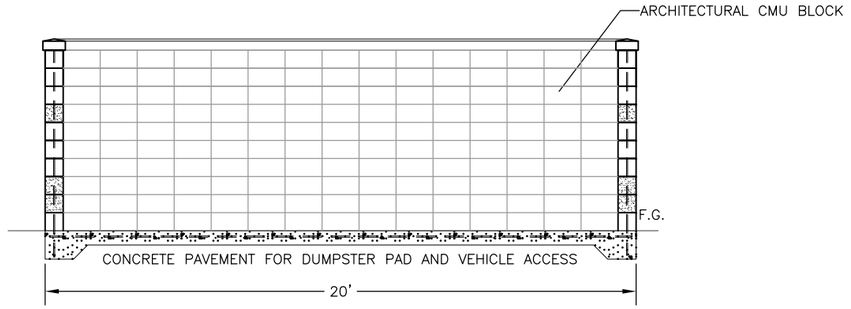

FRONT SECTION/ ELEVATION

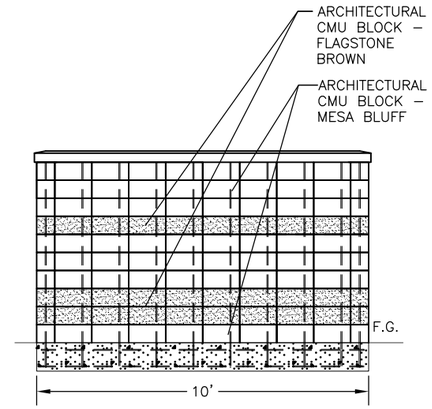

SIDE SECTION/ ELEVATION

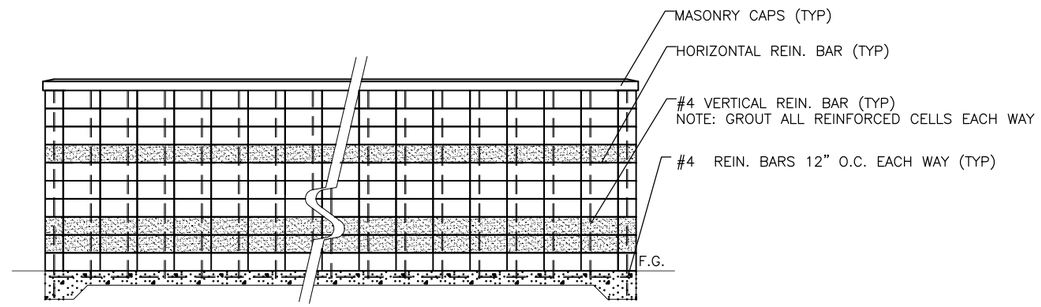

BACK SECTION/ELEVATION

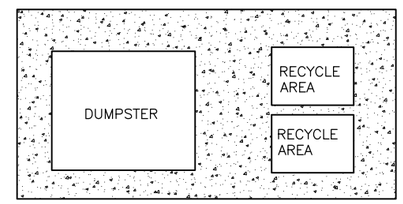

TOP VIEW

DUMPSTER PAD AND ENCLOSURE DETAILS

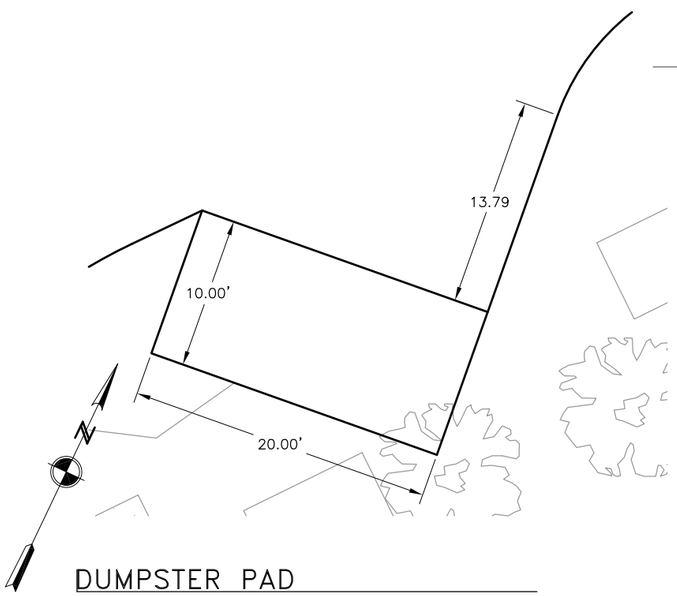

DUMPSTER PAD

1" = 10'

0 5 10 20 30 40

GRAPHIC SCALE

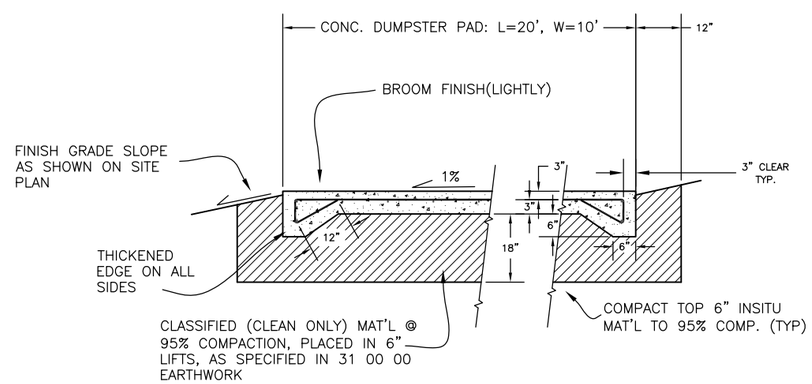

DUMPSTER PAD SECTION

N.T.S.

CONCRETE DUMPSTER PAD SUMMARY DATA

DESCRIPTION	ELEVATION	NORTHING	EASTING
NORTHEAST CORNER	452.94	3961361.49	1391367.34
NORTHWEST CORNER	453.00	3961370.91	1391370.69
SOUTHEAST CORNER	453.11	3961354.79	1391386.19
SOUTHWEST CORNER	453.00	3961364.21	1391389.54

NOT FOR CONSTRUCTION

BACKCHECK

US ARMY CORPS OF ENGINEERS
ALASKA DISTRICT

CONTRACT NO. _____
CONTRACTOR _____
CITY _____ STATE _____
PRIME CONTRACTOR — Recommended: _____
RESIDENT ENGINEER — Approved: _____ Date: _____

Sym	Action	Description	Date	Appvd

U.S. ARMY ENGINEER DISTRICT
CORPS OF ENGINEERS
ANCHORAGE, ALASKA

Designed: MED
Drawn: J.S.D.
Reviewed: T. Lubeck
Chief — Grafs-Tic-Ft-25 — Section
Submitted: D. Frenter
Chief, Design Branch
Date: 16 JULY 2009
Dwg Scale: AS NOTED
Plot Scale: 1:2
File: FTW336A-013-C4-02
Drawing #: F-211-13-01

INV. NO. W911KB-09-R-0007
PN 65076
FTW336A

FT. WAINWRIGHT, ALASKA
AIRCRAFT PARTS STORAGE
CIVIL
DETAILS
MISCELLANEOUS DETAILS 1

Reference number:
C4.02

Drawing x:\UNIFIED\EN-TE\Jobs\FTW336A\Dwgs\FTW336A-013-C4-02.dwg last saved on 7/15/2009 10:39 AM was plotted by Curfew, Donald L POA on 7/17/2009 6:35 AM

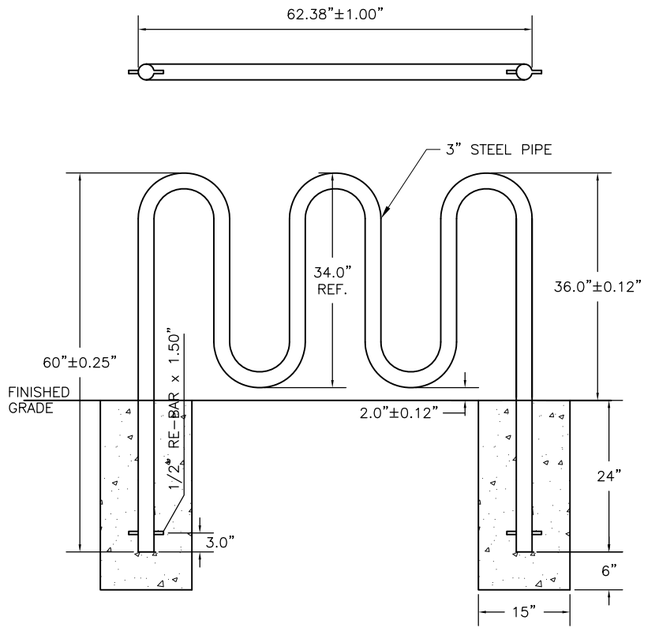

BIKE RACK

N.T.S.

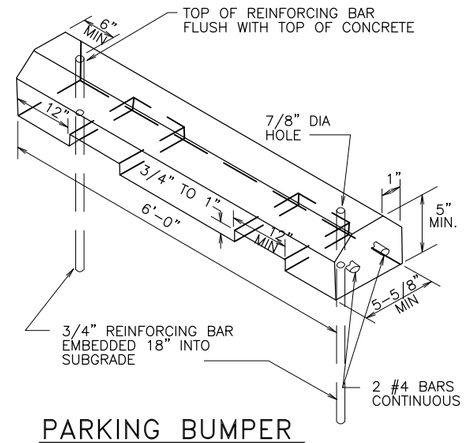

PARKING BUMPER

(PRECAST CONCRETE)

N.T.S.

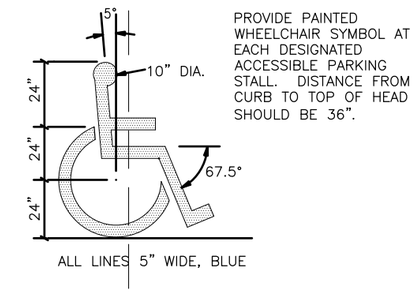

PROVIDE PAINTED WHEELCHAIR SYMBOL AT EACH DESIGNATED ACCESSIBLE PARKING STALL. DISTANCE FROM CURB TO TOP OF HEAD SHOULD BE 36".

PAVEMENT HANDICAP SYMBOL

N.T.S.

CURVES			
LABEL #	LENGTH	RADIUS	Δ
C1	49.39	59.00	47.97
C2	4.36	2.50	100.00
C3	7.85	2.50	180.00
LINES			
LABEL #	LENGTH	BEARING	
L1	20.88	S25° 20' 25.66" E	
L2	21.15	S50° 00' 00.00" W	
L3	17.49	N25° 49' 53.67" W	

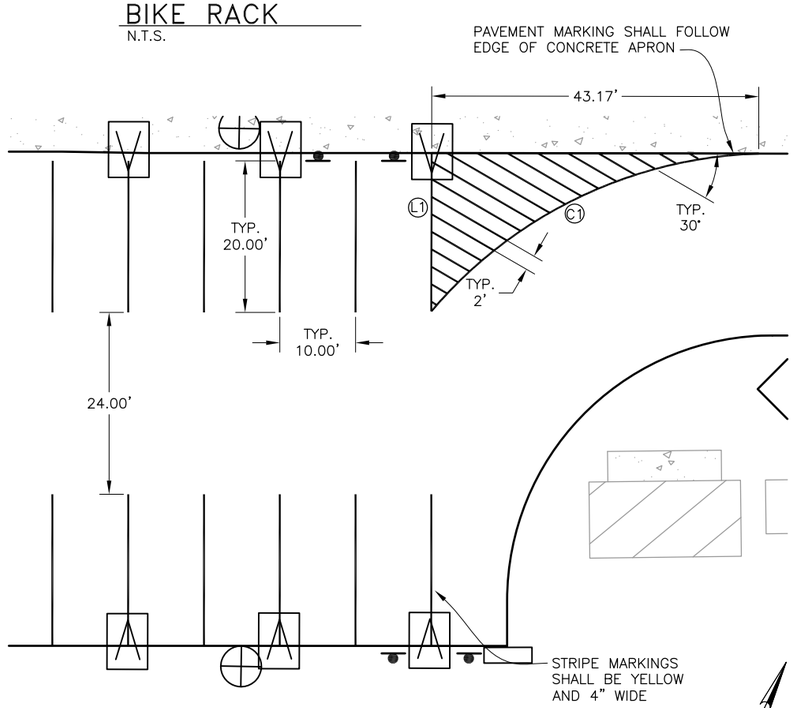

TYPICAL PARKING PAVEMENT MARKINGS

1" = 10'

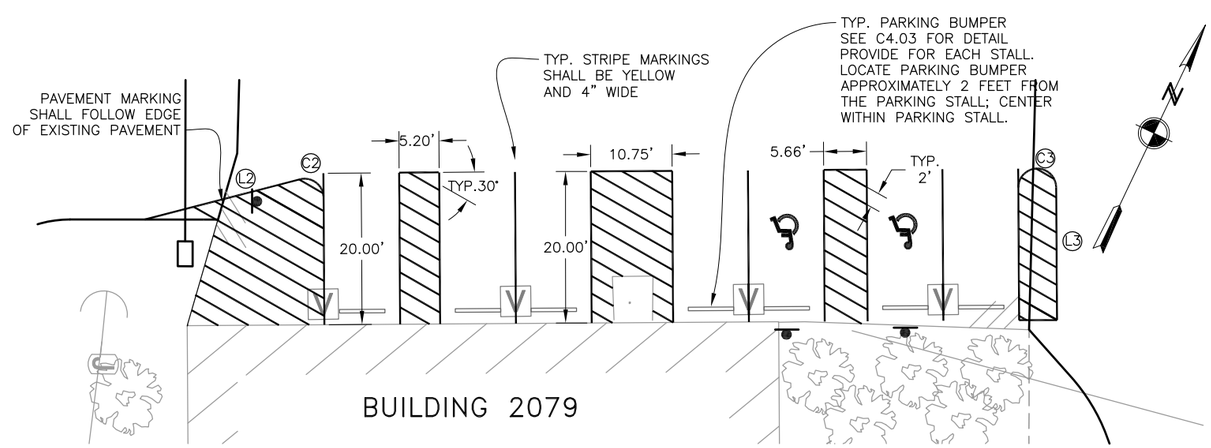

PAVEMENT MARKINGS IN FRONT OF BUILDING 2079

1" = 10'

0 5 10 20 30 40

GRAPHIC SCALE

NOT FOR CONSTRUCTION

BACKCHECK

US ARMY CORPS OF ENGINEERS
ALASKA DISTRICT

CONTRACT NO. ___
CONTRACTOR ___
CITY ___ STATE ___
PRIME CONTRACTOR ___
Recommended: ___
RESIDENT ENGINEER ___
Approved: ___
Date: ___

Sym	Action	Description	Date	Appvd

U.S. ARMY ENGINEER DISTRICT
CORPS OF ENGINEERS
ANCHORAGE, ALASKA

Designed: MED
Drawn: MED
Reviewed: T. Lubeck
Chief – Geotech-Tlt-Cs – Section
Submitted: D. Frenier
Chief – Design Branch
Date: 16 JULY 2009
Dwg Scale: AS NOTED
Plot Scale: 1:2
Plot: FTW336A_014-C4-03
Drawing #: F-211-13-01

INV. NO. W911KB-09-R-0007
PN 65076
FTW336A

FT. WAINWRIGHT, ALASKA
AIRCRAFT PARTS STORAGE
CIVIL
DETAILS
MISCELLANEOUS DETAILS 2

Reference number:
C4.03

Drawing x:\UNIFIED\EN-TE\Jobs\FTW336A\Dwgs\FTW336A-014-C4-03.dwg last saved on 7/15/2009 10:40 AM was plotted by Curfew, Donald L POA on 7/17/2009 6:36 AM

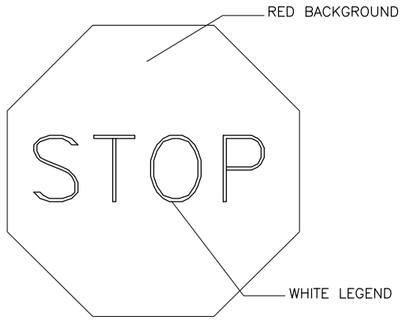

TRAFFIC SIGN S1

N.T.S.

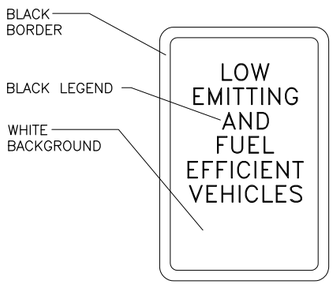

TRAFFIC SIGN S2

N.T.S.

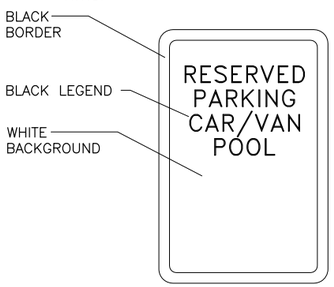

TRAFFIC SIGN S3

N.T.S.

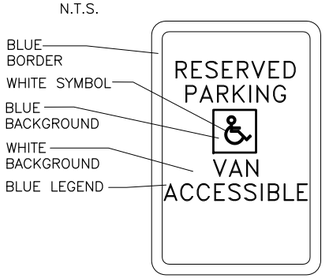

TRAFFIC SIGN S4

N.T.S.

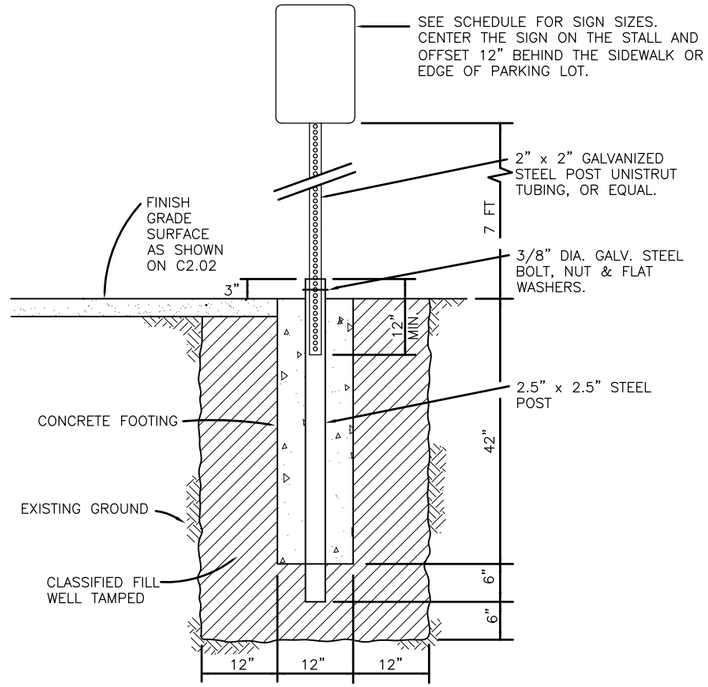

SIGNS SHALL CONFORM TO THE MANUAL ON UNIFORM TRAFFIC CONTROL DEVICES AND STATE OF ALASKA SIGN SPECIFICATIONS.

T6 ALUMINUM ALLOY 60–61 080" THICK, CONVERSION COATED WITH REFLECTIVE SHEETING, 3M HIGH GRADE, HIGH INTENSITY (ENDCAPSULATED LENS REFLECTIVE SHEETING)

TYPICAL SIGN POST

N.T.S.

SIGN REQUIREMENTS

ALL TRAFFIC SIGNS SHALL CONFORM TO MUTCD STANDARDS. USE AASHTO M 268, TYPE III REFLECTIVE SHEETING FOR LEGEND, SYMBOLS, BORDERS, AND BACKGROUND. EDGE SEAL SHEETING PER MANUFACTURERS RECOMMENDATIONS.

SIGN MATERIAL SHALL BE SHEET ALUMINUM ALLOY 6010–T6, 5052–H38, OR RECYCLED ALUMINUM MEETING ALLOY 3105, AS SPECIFIED IN ASTM B 209. ALUMINUM SHEET THICKNESS OF $\frac{5}{64}$IN. VERIFY ALLOY AND TEMPER DESIGNATIONS BY MILL CERTIFICATION. TREAT THE ALUMINUM BASE METAL SHEETS WITH CHROMATE CONVERSION COATING FOR ALUMINUM PER ASTM B 449, CLASS 2. HANDLE THE CLEANED AND COATED BASE METAL ONLY BY A MECHANICAL DEVISE OR BY OPERATORS WEARING CLEAN COTTON OR RUBBER GLOVES. AFTER CLEANING AND COATING OPERATIONS, PROTECT THE PANELS AT ALL TIMES FROM CONTACT OR EXPOSURE TO GREASES, OILS, DUST OR OTHER CONTAMINANTS. MEET THE PANEL DIMENSIONS SPECIFIED WITH A TOLERANCE OF $\frac{1}{16}$IN. FURNISH METAL PANELS THAT ARE CUT TO SIZE AND SHAPE AND FREE OF BUCKLES, WARP, DENTS, COCKLES, BURRS AND ANY OTHER DEFECTS RESULTING FROM FABRICATION. COMPLETE ALL POSSIBLE FABRICATION, INCLUDING SHEARING, CUTTING AND PUNCHING OF HOLES PRIOR TO BASE METAL PREPARATION.

SIGN POST SHALL BE PREFORMED STEEL POSTS FABRICATED FROM $\frac{7}{64}$IN COLD–ROLLED STEEL SHEETS, COMMERCIAL QUALITY, PER ASTM A 446, ZINC COATED BOTH SIDES PER ASTM A 525, COATED DESIGNATION G 90. FORM POST INTO A STEEL TUBE, ROLL TO SIZE, AND WELD ALONG EDGE ABUTMENT. PERFORATE ENTIRE LENGTH WITH $\frac{7}{16}$IN DIAMETER HOLES, 1IN ON CENTER. FURNISH MEMBERS THAT ARE STRAIGHT, SMOOTH, UNIFORM FINISH, WITH NO SPLICES. SIGN MOUNTING HARDWARE SHALL BE VANDAL PROOF AND GALVANIZED STEEL OR ALUMINUM.

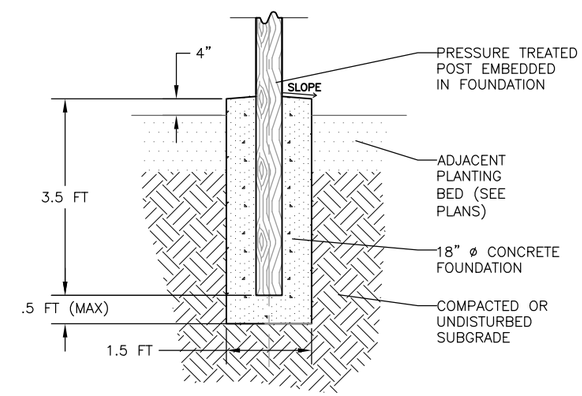

FRONT ELEVATION

ENTRY SIGN FOOTING ATTACHMENT

N.T.S.

SCHEDULE 1: TRAFFIC SIGNS

LOCATION								
N	E	TAG	LEGEND	SYMBOL	BORDER	BACKGROUND	DIMENSIONS	LEGEND TEXT
3961398.25	1391422.49	S1	WHITE	NONE	NONE	RED	30W X 30H	STOP
3961247.73	1391603.46	S1	WHITE	NONE	NONE	RED	30W X 30H	STOP
3961313.63	1391347.97	S2	BLACK	NONE	BLACK	WHITE	12W X 18H	LOW EMMITTING AND FUEL EFFICIENT VEHCILES
3961309.33	1391338.94	S2	BLACK	NONE	BLACK	WHITE	12W X 18H	LOW EMMITTING AND FUEL EFFICIENT VEHCILES
3961363.74	1391302.02	S3	BLACK	NONE	BLACK	WHITE	12W X 18H	RESERVED PARKING CAR/VAN ACCESIBLE
3961368.04	1391311.05	S3	BLACK	NONE	BLACK	WHITE	12W X 18H	RESERVED PARKING CAR/VAN ACCESIBLE
3961413.28	1391493.51	S4	BLUE	WHITE	BLUE	WHITE	12W X 18H	RESERVED PARKING VAN ACCESSIBLE
3961420.24	1391507.54	S4	BLUE	WHITE	BLUE	WHITE	12W X 18H	RESERVED PARKING VAN ACCESSIBLE

NOT FOR CONSTRUCTION
BACKCHECK

US ARMY CORPS OF ENGINEERS
ALASKA DISTRICT

CONTRACT NO. ___
CONTRACTOR ___
CITY ___ STATE ___
PRIME CONTRACTOR ___
Recommended: ___
RESIDENT ENGINEER ___
Approved: ___
Date: ___

Dwg Action	Description	Date	Appvd

U.S. ARMY ENGINEER DISTRICT
CORPS OF ENGINEERS
ANCHORAGE, ALASKA

Designed: MED
Drawn: MED
Reviewed: T. Lubeck
Chief: ___ Section
Submitted: D. Frenier
Chief: ___ Branch
Date: 16 JULY 2009
Dwg Scale: AS NOTED
Plot Scale: 1:2
File: FTW336A-015-C4-04
Drawing No: F-211-13-01
INV. NO. W911KB-09-R-0007
PN 65076
FTW336A

FT. WAINWRIGHT, ALASKA
AIRCRAFT PARTS STORAGE
CIVIL
DETAILS
SIGN DETAILS

Reference number:
C4.04

Drawing x:\UNIFIED\EN-TE\Jobs\FTW336A\Dwgs\FTW336A-015-C4-04.dwg last saved on 7/14/2009 4:28 PM was plotted by Curfew, Donald L POA on 7/17/2009 6:36 AM

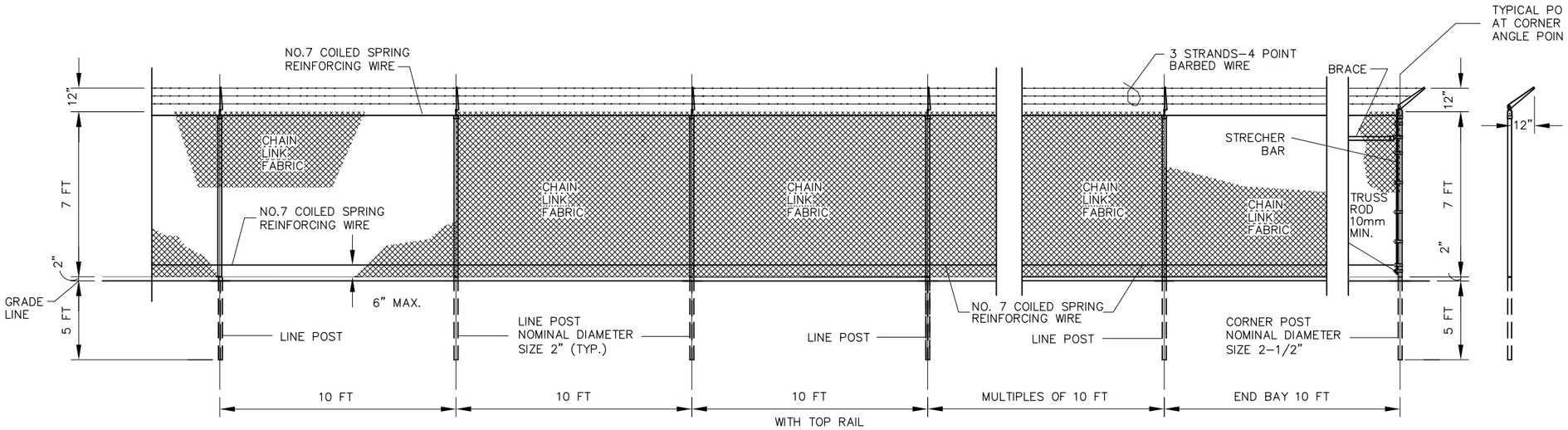

CHAIN–LINE SECURITY FENCE DETAIL

N.T.S.

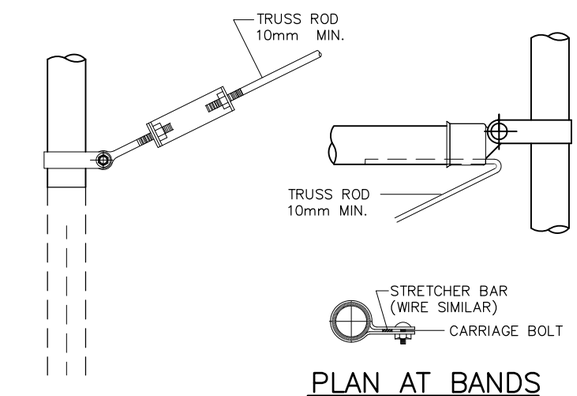

PLAN AT BANDS

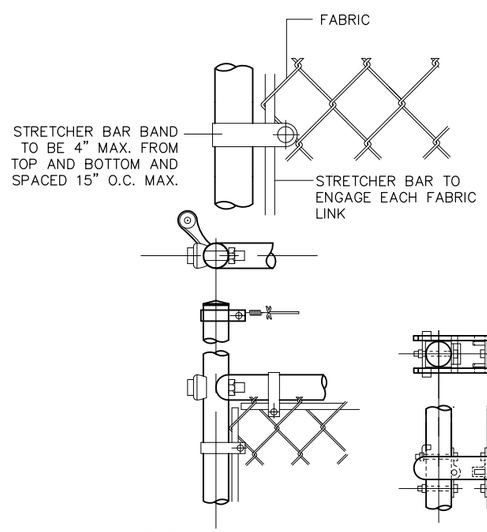

GATE FRAME HINGE

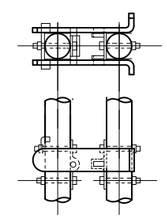

LATCH ASSEMBLY

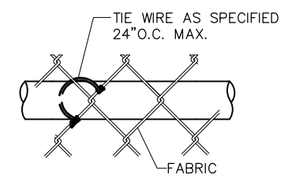

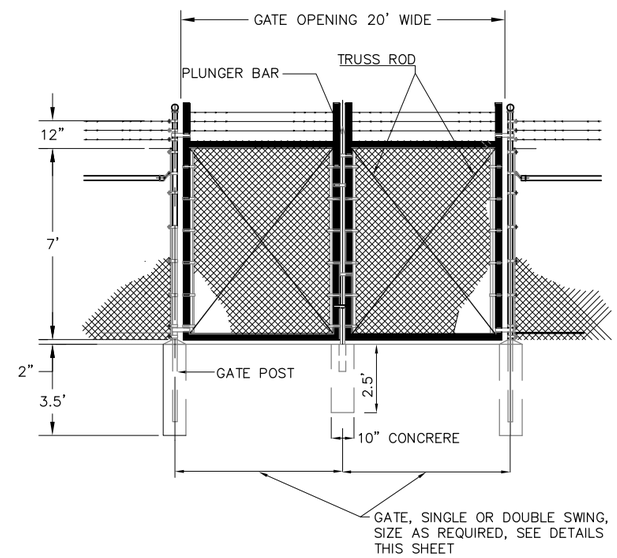

DOUBLE SWING GATE

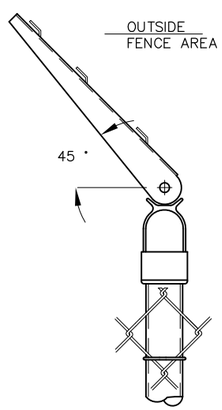

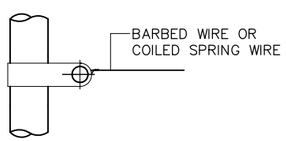

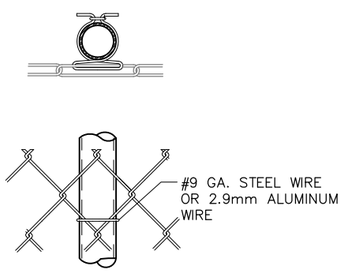

GATE KEEPER
(TO HOLD GATE OPEN)

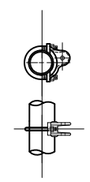

POST HINGE

FENCE AND GATE DETAILS

N.T.S.

NOT FOR CONSTRUCTION

BACKCHECK

US ARMY CORPS OF ENGINEERS
ALASKA DISTRICT

CONTRACT NO. _____
CONTRACTOR _____
CITY _____ STATE _____
PRIME CONTRACTOR — Recommended: _____
RESIDENT ENGINEER — Approved: _____ Date: _____

Sym	Action	Description	Date	Appvd

U.S. ARMY ENGINEER DISTRICT
CORPS OF ENGINEERS
ANCHORAGE, ALASKA

Designed: MED
Drawn: MED
Reviewed: T. Lubeck
Chief – Section
Submitted: D. Frenier
Chief – Branch
Date: 16 JULY 2009
Dwg Scale: AS NOTED
Plot Scale: 1:2
Plan: FTW336A-016-C4-05
Drawing #: F-211-13-01

INV. NO. W911KB-09-R-0007
PN 65076
FTW336A

FT. WAINWRIGHT, ALASKA
AIRCRAFT PARTS STORAGE
CIVIL
DETAILS
SECURITY FENCE DETAILS

Reference number:
C4.05

Drawing x:\UNIFIED\EN-TE\Jobs\FTW336A\Dwgs\FTW336A-016-C4-05.dwg last saved on 7/14/2009 4:28 PM was plotted by Curfew, Donald L POA on 7/17/2009 6:36 AM

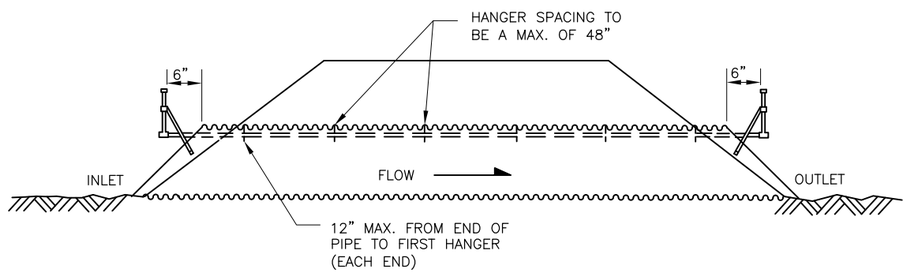

LOCATION OF THAW PIPE

N.T.S.

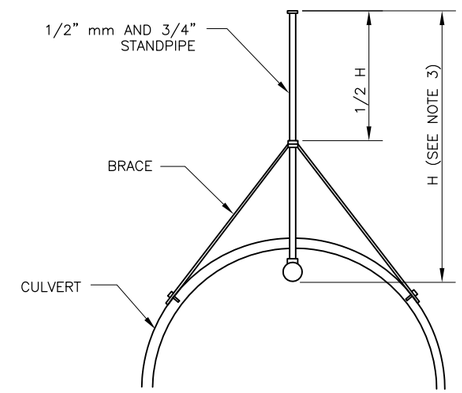

LOCATION OF STANDPIPE BRACE

N.T.S.

NOTES:

1. ALL PIPE FITTINGS, HANGERS, BRACES AND HARDWARE SHALL CONFORM TO ALASKA STANDARD SPECIFICATIONS FOR HIGHWAY CONSTRUCTION. LATEST EDITION.

2. ALL MAIN LINE PIPES AND STANDPIPES TO BE STANDARD GAL– VANIZED STEEL PIPE A.S.T.M. A 53 WITH STANDARD FITTINGS.

3. HEIGHT OF ALL STANDPIPES TO BE 1/2 THE HEIGHT OF CULVERT COVER OR 60", WHICHEVER IS LESS.

4. 1/2" MAIN LINE AND STANDPIPES TO BE LIQUID TIGHT AND FILLED WITH 50–50 ANTIFREEZE.

5. 1/2" THAW PIPE SHALL BE BRACED AS SHOWN.

6. STANDPIPE BRACES TO BE FIELD BENT AND ATTACHED TO CULVERT WITH STANDARD STRUCTURAL PLATE PIPE BOLTS.

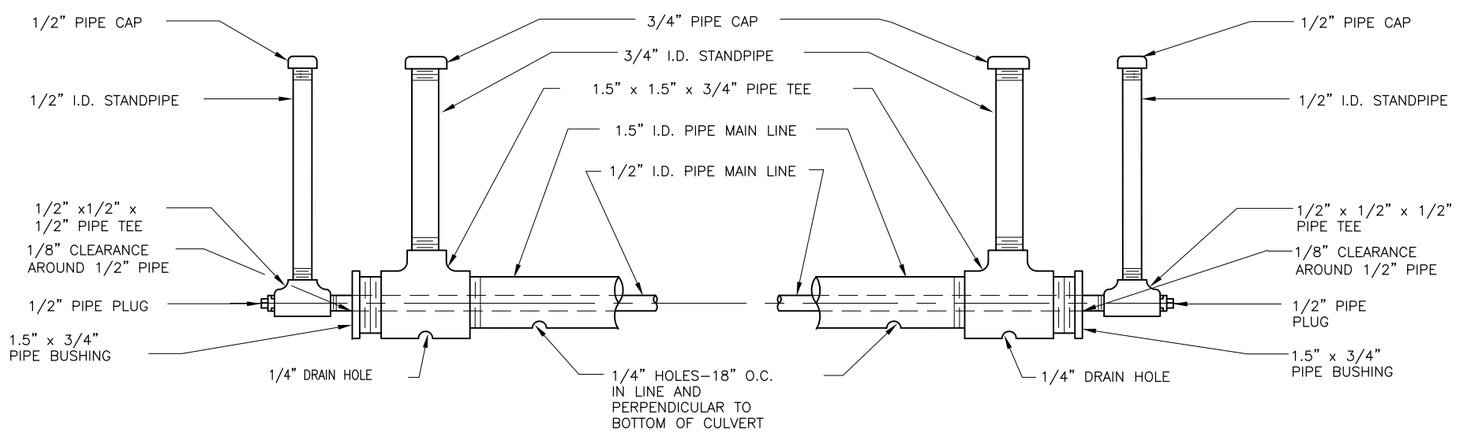

DOUBLE THAW PIPE

N.T.S.

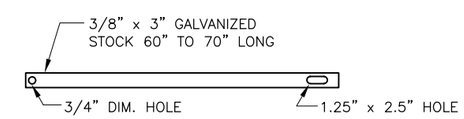

STANDPIPE BRACE DETAIL

N.T.S.

NOT FOR CONSTRUCTION

BACKCHECK

US ARMY CORPS OF ENGINEERS
ALASKA DISTRICT

CONTRACT NO. ___
CONTRACTOR ___
CITY ___ STATE ___
Recommended: ___ PRIME CONTRACTOR
Approved: ___ RESIDENT ENGINEER
Date: ___

Mod.	Action	Description	Date	Appvd

U.S. ARMY ENGINEER DISTRICT
CORPS OF ENGINEERS
ANCHORAGE, ALASKA

Designed: MED
Drawn: J.S.D.
Reviewed: T. Lubeck
Chief: ___ Section
Submitted: D. Frenter
Chief: ___ Branch
Date: 16 JULY 2009
Dwg Scale: AS NOTED
Plot Scale: 1:2
File: FTW336A-017-C4-06
Drawing #: F-211-13-01

INV. NO. W911KB-09-R-0007
PN 65076
FTW336A

FT. WAINWRIGHT, ALASKA
AIRCRAFT PARTS STORAGE
CIVIL
DETAILS
CULVERT THAW PIPE DETAIL

Reference number:
C4.06

Drawing x:\UNIFIED\EN-TE\Jobs\FTW336A\Dwgs\FTW336A-017-C4-06.dwg last saved on 7/14/2009 4:28 PM was plotted by Curfew, Donald L POA on 7/17/2009 6:36 AM

ABBREVIATIONS

AB	ANCHOR BOLT
ACOUST	ACOUSTICAL
ACT	ACOUSTICAL CEILING TILE
ADDN	ADDITION/ADDITIONAL
AFF	ABOVE FINISHED FLOOR
AFS	ABOVE FINISHED SLAB
AL	ALUMINUM
ALLOW	ALLOWABLE
ALT	ALTERNATE
ANOD	ANODIZED
AP	ACOUSTICAL PANEL
APPROX	APPROXIMATELY
ARCH	ARCHITECT / ARCHITECTURAL
ARGWB	ABUSE RESISTANT GWB
AVM	AIR/VAPOR/MOISTURE MEMBRANE
BB	BACKER BOARD
BC	BASE CABINET
BD	BOARD
BEWN	BETWEEN
BK	BACK
BLK	BLOCK
BLKG	BLOCKING
BM	BEAM
BRG	BEARING
BOD	BOTTOM OF DECK
BOT	BOTTOM
BUR	BUILT-UP ROOF
CAB	CABINET
CBB	CEMENT BACKER BOARD
CG	CORNER GUARD
CH BD	CHALK BOARD
CHKRD	CHECKERED
CJ	CONSTRUCTION JOINT
CL	CENTER LINE
CLG	CEILING
CLJ	CONTROL JOINT
CLR	CLASSROOM
CMP	CORRUGATED METAL PIPE
CMU	CONCRETE MASONRY UNIT
CO	CLEAN OUT
COL	COLUMN
COMM	COMMUNICATION
CONC	CONCRETE
CONST	CONSTRUCTION
CONT	CONTINUOUS
CONTR	CONTRACTOR
CONV	CONVECTOR
COORD	COORDINATE
CORR	CORRIDOR
CPT	CARPET
CSK	COUNTERSINK
CSMT	CASEMENT
CT	CERAMIC TILE
CTR	CENTER(ED)
CU	CUBIC
CUH	CABINET UNIT HEATER
CW	COLD WATER
DEG	DEGREES
DEMO	DEMOLITION
DET	DETAIL
DF	DRINKING FOUNTAIN
DIA	DIAMETER
DIFF	DIFFUSER
DIM	DIMENSION
DK	DECK
DN	DOWN
DO	DITTO
DP	DEEP
DR	DOOR
DS	DOWN SPOUT
DWG	DRAWING
E	EAST
EA	EACH
EIFS	EXTERIOR INSULATION FINISH SYSTEM
ELEV	ELEVATION
ELEC	ELECTRICAL
EQUIP	EQUIPMENT
EW	EACH WAY
EXH	EXHAUST
EXH A	EXHAUST AIR
EXH H	EXHAUST HOOD
EXP	EXPANDED / EXPANSION
EXP JT	EXPANSION JOINT
EXST	EXISTING
EXT	EXTERIOR
EXTR	EXTRUDED
FA	FIRE ALARM
FAB	FABRICATE
FD	FLOOR DRAIN
FDC	FIRE DEPARTMENT CONNECTION
FDN	FOUNDATION
FE	FIRE EXTINGUISHER
FEC	FIRE EXTINGUISHER CABINET
FF	FACTORY FINISHED
FG	FIBERGLASS
FHC	FIRE HOSE CABINET
FHWS	FLAT HEAD WOOD SCREW
FHMS	FLAT HEAD MACHINE SCREW
FIG	FIGURE
FIN	FINISH
FIN GR	FINISH GRADE
FIN FL	FINISH FLOOR
FL	FLASHING
FLT GL	FLOAT GLASS
FLR	FLOOR
FOC	FACE OF CONCRETE
FOF	FACE OF FINISH
FOM	FACE OF MASONRY
FOS	FACE OF STUD
FOW	FACE OF WALL
FPM	FLAT PANEL MONITOR
FRRVR	FIRE RETARDANT REINF. V.R.
FPRF	FIRE PROOFING
FR	FIRE RATING
FRP	FIBERGLASS REINFORCED PANEL
FRT	FIRE RETARDANT TREATED
FT	FOOT / FEET
FTO	FIRE-TAPE ONLY
FTG	FOOTING
FXTR	FIXTURE
GA	GAGE
GALV	GALVANIZED
GALVS	GALVANIZED STEEL
GB	GRAB BAR
GC	GENERAL CONTRACTOR
GEN	GENERAL
GL	GLASS
GLB	GLUE LAM BEAM
GLZ	GLAZING
GMGWB	GLASS MAT GYPBOARD
GOV	GOVERNMENT
GR	GRADE
GS	GRANITE SLAB
GSP	GALVANIZED STEEL PIPE
GT	GRANITE TILE
GWB	GYPSUM WALLBOARD
HB	HOSE BIBB
HC	HANDICAPPED
HDWD	HARDWOOD
HDWR	HARDWARE
HD	HEAVY DUTY
HM	HOLLOW METAL
HORIZ	HORIZONTAL
HR	HOUR
HT	HEIGHT
HTG	HEATING
HW	HOT WATER
IBC	INTERNATIONAL BUILDING CODE
IN	INCH
ID	INSIDE DIAMETER
INSUL	INSULATION
IHM	INSULATED HOLLOW METAL
INT	INTERIOR
INV	INVERT
IRGWB	IMPACT RESISTANT GWB
JAN	JANITOR
JT	JOINT
JST	JOIST
KD	KILN DRIED
KO	KNOCKOUT
KPL	KICK PLATE
KW	KILOWATT
KWH	KILOWATT HOUR
L	LEFT
LAM	LAMINATE
LAV	LAVATORY
LB	POUND
LBR	LUMBER
LF	LINEAR FOOT
LINO	LINOLEUM
LS	LANDSCAPE
LT	LIGHT
MAS	MASONRY
MAN	MANUAL
MATL	MATERIAL
MAX	MAXIMUM
MB	MACHINE BOLT
MDO	MEDIUM DENSITY OVERLAY
MECH	MECHANICAL
MEMB	MEMBRANE
MEZZ	MEZZANINE
MFG	MANUFACTURER (ED)
MH	MANHOLE
MO	MASONRY OPENING
MTL	METAL
MILWK	MILLWORK
MIN	MINIMUM
MIR	MIRROR
MISC	MISCELLANEOUS
MLDG	MOLDING
MP	METAL PANEL
MS	METAL STUD
MTD	MOUNTED
N	NORTH
NA	NOT APPLICABLE
NAT FIN	NATURAL FINISH
NFS	NON FROST SUSCEPTIBLE
NIC	NOT IN CONTRACT
NLB	NON LOAD BEARING
NO	NUMBER
#	NUMBER
NOM	NOMINAL
NR	NON-RATED
NTS	NOT TO SCALE
OA	OUTSIDE AIR
OC	ON CENTER
OFCI	OWNER FURNISHED-CONTRACTOR INSTALLED
OFOI	OWNER FURNISHED-OWNER INSTALLED
OLS	OCCUPANT LOAD SIGN
OPP	OPPOSITE
OPG'S	OPENING (S)
ORD	OVERFLOW ROOF DRAIN
ORIG	ORIGINAL
OVHD	OVERHEAD
PB	PANIC BAR
PBD	PARTICLE BOARD
PL	PLATE
PLAM	PLASTIC LAMINATE
PLYWD	PLYWOOD
PNL	PANEL
POLY	POLYSTYRENE
PR	PAIR
PRCST	PRECAST
PREFAB	PREFABRICATED
PREFIN	PREFINISHED
PT	PAINT
PTD	PAINTED
PTR	PAPER TOWEL RECEPTOR
PVC	POLYVINYL CHLORIDE
PSF	POUNDS PER SQUARE FOOT
PTN	PARTITION
QT	QUARRY TILE
R	RIGHT
RA	RETURN AIR
RAD	RADIUS
RB	RUBBER
RCP	REFLECTED CEILING PLAN
RD	ROOF DRAIN
RDF	RECONFIGURABLE DOOR FRAME
RDR	RECONFIGURABLE DOOR
REF	REFERENCE
REINF	REINFORCE (D) (ING) (MENT)
REQD	REQUIRED
RESIL	RESILIENT
REV	REVISE
RFG	ROOFING
RFS	RAISED FLOOR SYSTEM
RHMS	ROUND HEAD MACHINE SCREW
RHWS	ROUND HEAD WOOD SCREW
RIGID	INSUL RIGID INSULATION
RL	RAIN LEADER
RM	ROOM
RND	ROUND
RO	ROUGH OPENING
RT	RUBBER TILE
RTR	RUBBER TREADS & RISERS
RV	ROOF VENT
RW	RECONFIGURABLE WALL
S	SOUTH
SA	SUPPLY AIR
SAM	SELF-ADHERED MEMBRANE
SAT	SUSP. ACOUSTICAL TILE (CLG)
SC	SOLID CORE
SCHED	SCHEDULE
SCW	SOLID CORE WOOD
SECT	SECTION
SF	SQUARE FOOT / FEET
SHT	SHEET
SHTHG	SHEATHING
SIM	SIMILAR
SLR	SEALER
SM	SHEET METAL
SMLS	SEAMLESS
SND	SANITARY NAPKIN DISPENSER
SNR	SANITARY NAPKIN RECEPTOR
SPEC	SPECIFICATION(S)
SQ	SQUARE
SS	SANITARY SEWER
SSK	SERVICE SINK
SST	STAINLESS STEEL
ST	STAIN
STD	STANDARD
STL	STEEL
STOR	STORAGE
STRL	STRUCTURAL
SUBS	SUBSTRATE
SUSP	SUSPENDED
SUSP	SUSPENDED CEILING
SV	SHEET VINYL
T	THERMOSTAT
TBHM	THERMAL BREAK HOLLOW METAL
TEL	TELEPHONE
TEMP	TEMPERATURE
T&G	TONGUE AND GROVE
THK	THICK
THOLD	THRESHOLD
THRU	THROUGH
TK BD	TACK BOARD
TMPD	TEMPERED
TMPD GL	TEMPERED GLASS
TO	TOP OF
TOM	TOP OF MASONRY
TOS	TOP OF STEEL
TPH	TOILET PAPER HOLDER
TRANSV	TRANSVERSE
TS	TUBE STEEL
TV	TELEVISION
TYP	TYPICAL
UG	UNDERGROUND
UH	UNIT HEATER
UL	UNDERWRITERS LIBRATORY
UNFIN	UNFINISHED
UNO	UNLESS NOTED OTHERWISE
UR	URINAL
V	VENT
VAC	VACUUM
VAR	VARIES
VCT	VINYL COMPOSITION TILE
VERT	VERTICAL
VEST	VESTIBULE
VR	VAPOR RETARDER
VTR	VENT THROUGH ROOF
W	WEST
W	WASTE
W/	WITH
W/O	WITH OUT
WC	WATER CLOSET
WCG	WALL COVERING
WD	WOOD
WD	WIDTH
WDO	WINDOW
WF	WIDE FLANGE
WGWB	WATER RESISTANT GWB
WH	WALL HUNG
WHT BD	WHITE BOARD
WR	WASTE RECEPTACLE
WRG	WATER RESISTANT GYPSUM BOARD
WT	WEIGHT
WTRPRF	WATERPROOF
WWF	WELDED WIRE FABRIC

SYMBOLS

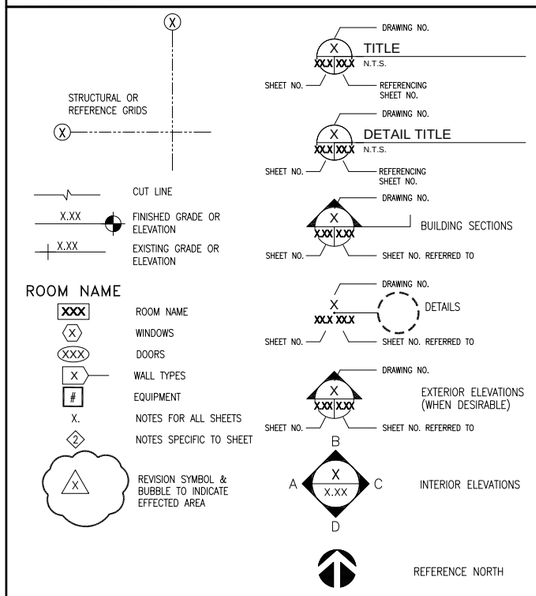

GENERAL NOTES

1). ALL WORK SHALL BE PERFORMED IN ACCORDANCE WITH ALL APPLICABLE CODES, STANDARDS, REGULATIONS AND LAWS AND ALL OTHER ENACTED OR PUBLISHED CONTROLS GOVERNING OR AFFECTING THE WORK.

2). ALL DIMENSIONS ARE TO FACE OF CONCRETE, FACE OF MASONARY, FACE OF STUD, UNLESS OTHERWISE NOTED. SEE ALSO STRUC. DWGS.

3). FIRE STOP ALL PENETRATIONS THROUGH FIRE RATED WALLS, PARTITIONS, FLOOR, AND CEILING ASSEMBLIES

4). REFER TO STRUCTURAL DRAWINGS FOR SIZES AND LOCATIONS OF STRUCTURAL MEMBERS.

5). REVIEW ALL CONSTRUCTION DOCUMENTS FOR DISCREPANCIES BETWEEN THE DOCUMENTS, OR BETWEEN THE DOCUMENTS AND CONDITIONS AT THE JOBSITE. IMMEDIATELY NOTIFY CONTRACTING OFFICER OF ALL DISCREPANCIES.

MATERIAL LEGEND

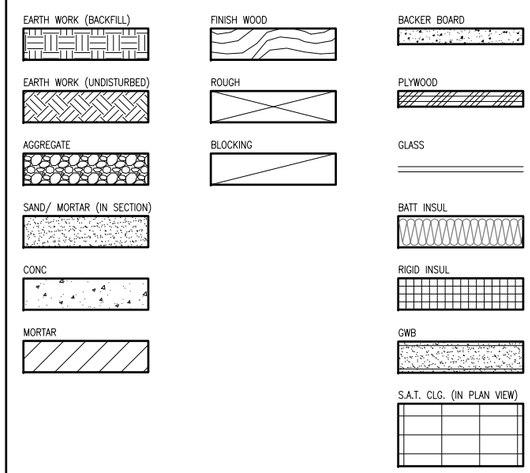

NOT FOR CONSTRUCTION
BACKCHECK

US ARMY CORPS OF ENGINEERS
ALASKA DISTRICT

PRIME CONTRACTOR — RESIDENT ENGINEER — Recommended: — Approved: — Date: — CITY — STATE — CONTRACTOR — CONTRACT NO.

Symb	Action	Description	Date	Appvd

U.S. ARMY ENGINEER DISTRICT
CORPS OF ENGINEERS
ANCHORAGE, ALASKA

Designed: RWK
Drawn: RWK
Reviewed: Robert Clayton
Chief: — — CEPOA-Ch-Tc-Sk — Section
Submitted: D. Frenier — — — — Branch
Chief: CEPOA-Ch-Tc-Sk — Section
Date: 16 JULY 2009
Dwg Scale: AS NOTED
Plot Scale: 1:2
File: FTW336A-018-A0-01
Drawing: N/A F-211-13-01

INV. NO. W911KB-09-R-0007
PN 65076
FTW336A

FT. WAINWRIGHT, ALASKA
AIRCRAFT PARTS STORAGE
ARCHITECTURAL
GENERAL
SYMBOLS AND ABBREVIATIONS

Reference number:
A0.01

Drawing x:\UNIFIED\EN-TE\Jobs\FTW336A\Dwgs\FTW336A-018-A0-01.dwg last saved on 7/13/2009 9:44 AM was plotted by Curfew, Donald L POA on 7/17/2009 6:36 AM

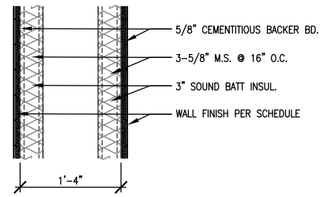

7 PLUMBING CHASE – NON-RATED
SCALE: 1"=1'-0"
STC-50

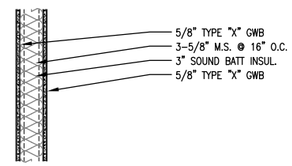

6B DELETE SOUND BATT INSUL. & PROVIDE IRGWB FULL HEIGHT BOTH SIDES IN LIEU OF NORMAL IMPACT GWB & 1/2" INTUMESCENT F.R.T. PLYWOOD FULL HEIGHT O/ GWB AT WAREHOUSE SIDE

6A PROVIDE ARGWB IN LIEU OF NORMAL IMPACT GWB AT PUBLIC AREAS & CORRIDORS

6 3-5/8" INTERIOR WALL – NON-RATED
SCALE: 1"=1'-0"
STC-45

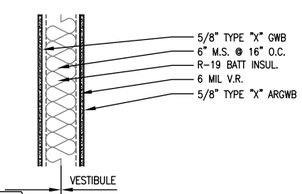

5B ADD 1/2" INTUMESCENT PTD. F.R.T. PLYWOOD WAINSCOT FULL HEIGHT IN LIEU OF GWB AT WAREHOUSE SIDE

5A PROVIDE ARGWB IN LIEU OF NORMAL IMPACT GWB ON CORRIDOR SIDE

5 6" INTERIOR WALL – NON-RATED
SCALE: 1"=1'-0"
STC-45

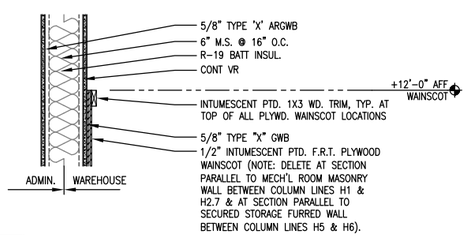

4A PROVIDE 5/8" CEMENT BACKER BOARD OVER (IN ADDITION TO) IRGWB ON LATRINE SIDE FOR CERAMIC TILE INSTALLATION

4 6" INTERIOR WALL – 1-HR. RATED
SCALE: 1"=1'-0"
GA# 1072/ STC-45

3 NOT USED
SCALE: 1"=1'-0"

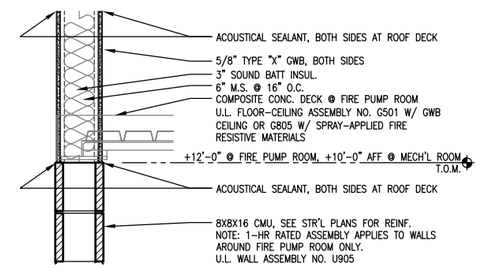

2 8" INTERIOR WALL – 1-HR RATED (AT FIRE PUMP ROOM)
SCALE: 1"=1'-0"
SEE NOTES FOR FIRE ASSEMBLIES

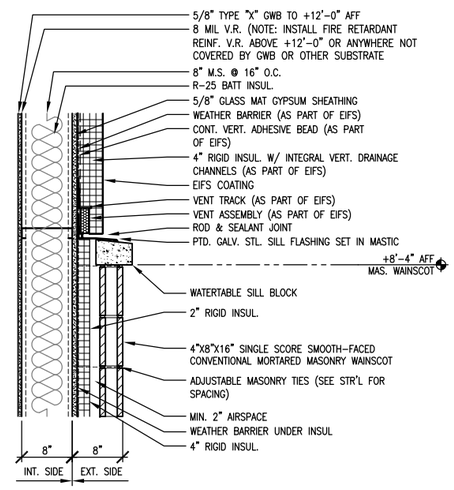

NOTE: THIS ASSEMBLY IS PROVIDED AS ALTERNATE TO MORTAR-LESS MASONRY CLADDING AT CONTRACTOR DISCRETION. CONTRACTOR TO INDICATE WHICH ASSEMBLY HAS BEEN CHOSEN IN BID FORMS. ALL OTHER TYPE 1 WALL SUB-ASSEMBLIES (1A, 1B OR 1C) NOTES/ CHANGES APPLY REGARDLESS OF WAINSCOT SYSTEM CHOSEN.

1 EXTERIOR WALL (OPTIONAL) – NON RATED
SCALE: 1"=1'-0"

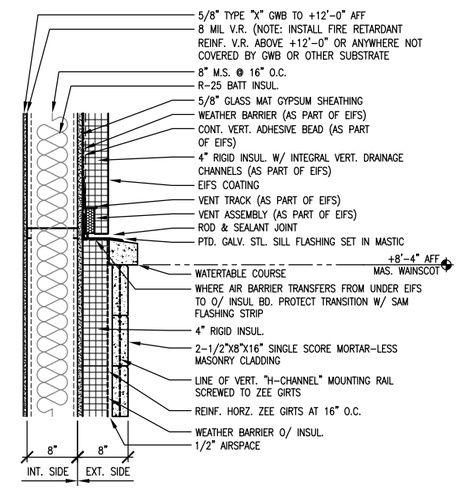

1C PROVIDE IRGWB IN LIEU OF NORMAL IMPACT GWB INSIDE SECURE STORAGE ROOM

1B PROVIDE 1/2" INTUMESCENT PTD. F.R.T. PLYWOOD WAINSCOT TO +12'-0" AFF 1/ INTUMESCENT PTD. 1X3 WD. TRIM (SEE WALL TYPE 4) IN LIEU OF 5/8" GWB AT WAREHOUSE

1A PROVIDE ARGWB IN LIEU OF NORMAL IMPACT GWB IN PUBLIC AREAS & CORRIDORS

1 EXTERIOR WALL (PREFERED) – NON RATED
SCALE: 1"=1'-0"

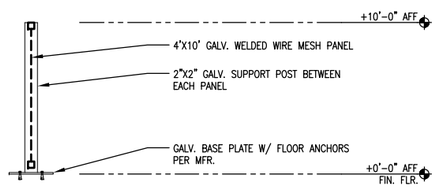

BIDDER NOTE: USE WALL LENGTHS, LAYOUT AND ACCESSORIES AS SHOWN ON DRAWINGS FOR BIDDING AND PURCHASING PURPOSES ONLY. CONTRACTOR TO COORDINATE ACTUAL LAYOUT LOCATIONS AND ROOM CONFIGURATIONS WITH COMPANY NCOIC.

9 STORAGE CAGES – NON-RATED
SCALE: 1"=1'-0"

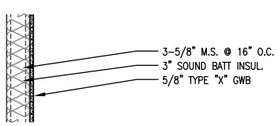

8C DELETE BATT INSUL. & PROVIDE 1/2" INTUMESCENT PTD. F.R.T. PLYWOOD IN LIEU OF NORMAL IMPACT GWB AT WAREHOUSE LOCATIONS

8B DELETE BATT INSUL. & PROVIDE IRGWB IN LIEU OF NORMAL IMPACT GWB AT SECURED STORAGE

8A PROVIDE 1-5/8" M.S. IN LIEU OF 3-5/8" M.S. & DELETE SOUND BATT INSUL.

8 INTERIOR FURRING – NON-RATED
SCALE: 1"=1'-0"

SHEET NOTES:

1. FOR WALL TYPES IN LATRINES WITH CERAMIC TILES (SEE FINISH SCHEDULE) REPLACE 5/8" TYPE "X" GWB WITH 5/8" CEMENTITIOUS BACKER BOARD BEHIND TILE U.N.O. IN WALL TYPES.
2. WALL TYPES 1, 2 & 4 SHALL EXTEND FULL HEIGHT TO ROOF ASSEMBLY. ALL OTHER WALL TYPES WITHIN ADMINISTRATION AREA WILL TERMINATE AT +12'-0" AFF. ALL OTHER WALL TYPES IN GENERAL STORAGE AREA WILL TERMINATE AT FRAMED CLG. HGT. PER REFLECTED CEILING PLAN.
3. VAPOR RETARDER (VR) INSTALLATION SHALL BE CONT. FROM SLAB UP WALLS & ACROSS ROOF DECK. AT EXPOSED VR LOCATIONS (NOT COVERED BY GWB OR SIMILAR SUBSTRATE), PROVIDE 8-MIL FIRE RETARDANT REINFORCED VR MEETING NFPA 701 & ASTM E84 TESTS FOR CLASS 1, CLASS A FLAME SPREAD RATINGS. WHERE EXPOSED TO VIEW, PROVIDE WHITE, CLEAR OR OTHER LIGHT COLOR. DARK COLORED VR'S ARE PROHIBITED. SEAL ALL LAPS, PENETRATIONS, RECESSED EQUIPMENT & PUNCTURES W/ ASPHALTIC MASTIC TAPE OR SEALANT AS APPROVED BY MFR. FOR USE WITH VR'S.
4. GYPSUM WALL BOARD DESCRIPTIONS:
   A. NORMAL IMPACT GYPSUM WALL BOARD (GWB) AT WALLS SHALL BE 5/8" THK. FIRE RATED EQUIVALENT TO UNITED STATES GYPSUM COMPANY SHEETROCK BRAND FIRECODE CORE GYPSUM PANELS.
   B. ABUSE RESISTANT GYPSUM WALL BOARD (ARGWB) AT WALLS SHALL BE 5/8" THK. FIRE RATED EQUIVALENT TO NATIONAL GYPSUM COMPANY FIRE-SHIELD TYPE X HI-ABUSE BRAND GYPSUM PANELS
   C. IMPACT RESISTANT GYPSUM WALL BOARD (IRGWB) AT WALLS SHALL BE 5/8" THK. FIRE RATED, EQUIVALENT TO NATIONAL GYPSUM COMPANY FIRE-SHIELD TYPE X HI-IMPACT BRAND 8000 GYPSUM PANELS W/ 0.080" LEXAN REINF. SUBSTRATE.
   D. GYPSUM PANEL CEILINGS TO UTILIZE EQUIVALENT 1/2" THK. VERSIONS OF GWB PANELS LISTED ABOVE U.N.O.
   E. EXTERIOR SHEATHING SHALL BE 5/8" THK. GLASS MAT FACED GYPSUM SHEATHING W/ WATER-RESISTANT TREATED CORE EQUIVALENT TO GEORGIA-PACIFIC BUILDING PRODUCTS DENSGLASS EXTERIOR SHEATHING OR AS RECOMMENDED BY EIFS MANUFACTURER.

US ARMY CORPS OF ENGINEERS
ALASKA DISTRICT

CONTRACT NO. ___
CONTRACTOR ___
CITY ___ STATE ___
PRIME CONTRACTOR ___ Recommended: ___
RESIDENT ENGINEER ___ Approved: ___
Date: ___

Symb	Action	Description	Date	Appvd

U.S. ARMY ENGINEER DISTRICT
CORPS OF ENGINEERS
ANCHORAGE, ALASKA

Designed: RWK
Drawn: RWK
Reviewed: Robert Clayton
Chief — GPDA-Ch-Fl-Sk — Section
Submitted: D. Frenier
Chief — GPDA-Ch-Fl — Branch
Date: 16 JULY 2009
Dwg Scale: AS NOTED
Plot Scale: 1:2
File: FTW336A-019-A0-02
Drawing #: F-211-13-01

INV. NO. W911KB-09-R-0007
PN 65076
FTW336A

FT. WAINWRIGHT, ALASKA
AIRCRAFT PARTS STORAGE
ARCHITECTURAL
GENERAL
WALL TYPES

Reference number:
A0.02
Sheet 19 of 118

NOT FOR CONSTRUCTION
BACKCHECK

Drawing x:\UNIFIED\EN-TE\Jobs\FTW336A\Dwgs\FTW336A-019-A0-02.dwg last saved on 7/13/2009 8:13 AM was plotted by Curfew, Donald L POA on 7/17/2009 6:36 AM

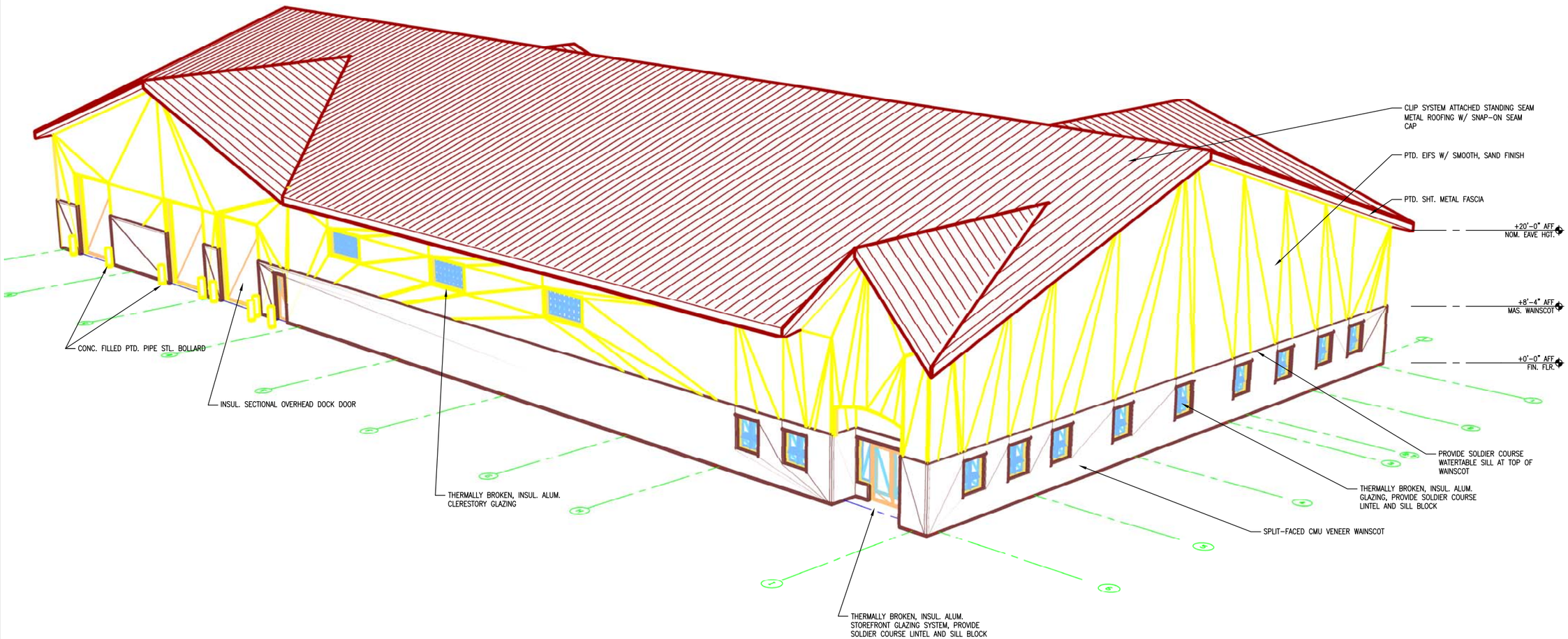

2 / A0.03 ARCHITECTURAL PERSPECTIVE

SCALE: N.T.S.

TRUE NORTH

NOT FOR CONSTRUCTION

BACKCHECK

US ARMY CORPS OF ENGINEERS
ALASKA DISTRICT

CONTRACT NO. _____
CONTRACTOR _____
CITY _____ STATE _____
PRIME CONTRACTOR _____
Recommended: _____
RESIDENT ENGINEER _____
Approved: _____
Date: _____

Item	Action	Description	Date	Approd

U.S. ARMY ENGINEER DISTRICT
CORPS OF ENGINEERS
ANCHORAGE, ALASKA

Designed: R.W.K.
Drawn: R.W.K.
Reviewed: Robert Clayton
Chief — CEPOA-TS-E-SA — Section
Submitted: D. Frenier
Chief — CEPOA-TS-E — Branch
Date: 16 JULY 2009
Dwg Scale: AS NOTED
Plot Scale: 1:2
File: FTW336A-020-A0-03
Drawing: W-F-211-13-01
INV. NO. W911KB-09-R-0007
PN 65076
FTW336A

FT. WAINWRIGHT, ALASKA
AIRCRAFT PARTS STORAGE
ARCHITECTURAL
GENERAL
ARCHITECTURAL PERSPECTIVE VIEW

Reference number:
A0.03

Drawing x:\UNIFIED\EN-TE\Jobs\FTW336A\Dwgs\FTW336A-020-A0-03.dwg last saved on 7/13/2009 9:31 AM was plotted by Curfew, Donald L POA on 7/17/2009 6:37 AM

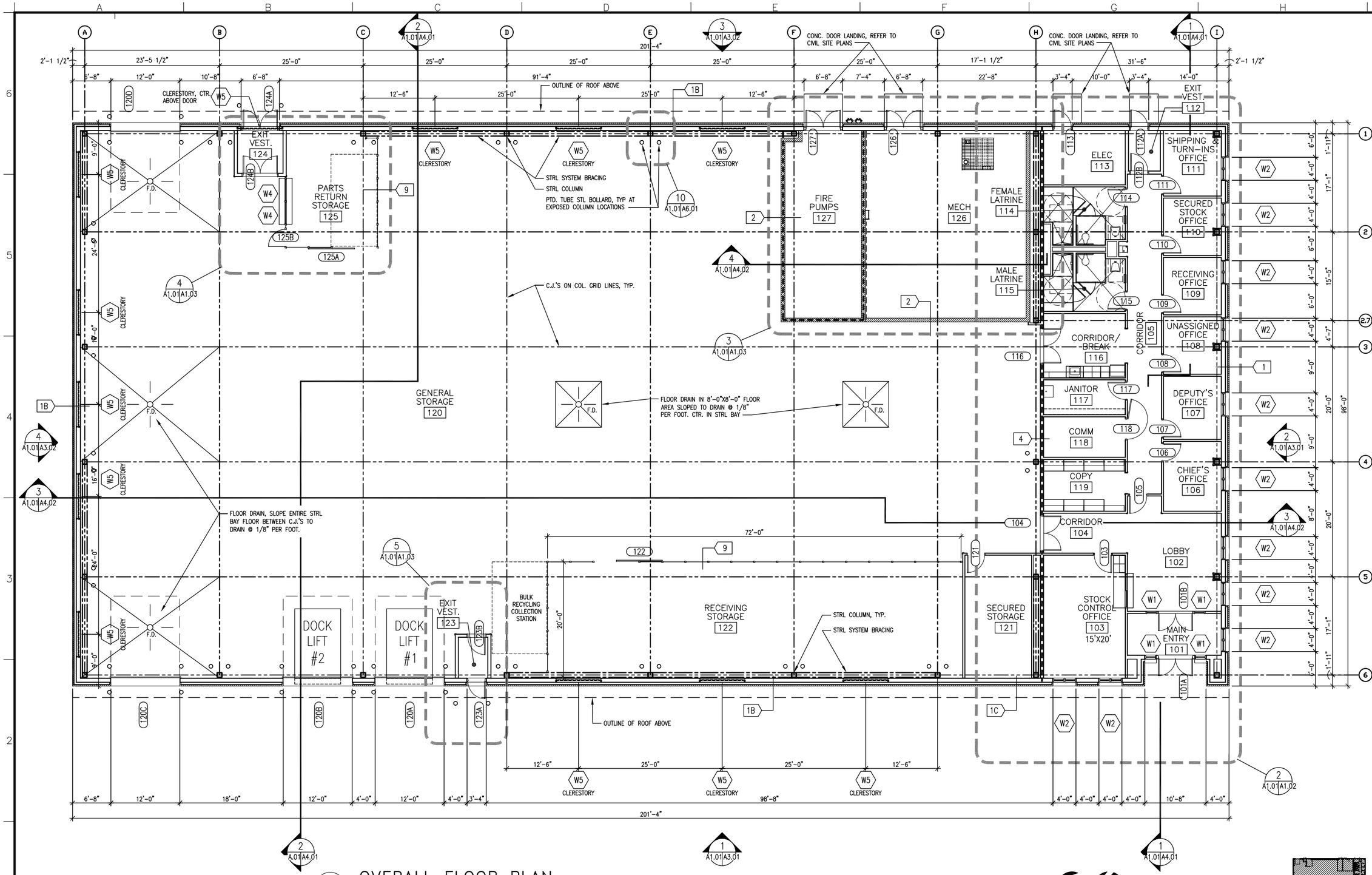

OVERALL FLOOR PLAN

SCALE: 1/8"=1'-0"

1 HOUR FIRE RATED WALL

TRUE NORTH

PLAN NORTH

KEYPLAN

NOT FOR CONSTRUCTION

BACKCHECK

US ARMY CORPS OF ENGINEERS
ALASKA DISTRICT

CONTRACT NO. _____
CONTRACTOR _____
CITY _____ STATE _____
PRIME CONTRACTOR: _____
RESIDENT ENGINEER: _____
Recommended: _____
Approved: _____
Date: _____

Sym	Action	Description	Date	Appvd

U.S. ARMY ENGINEER DISTRICT
CORPS OF ENGINEERS
ANCHORAGE, ALASKA

Designed: RWK
Drawn: RWK
Reviewed: Robert Clayton
Chief — Section
Submitted: D. Frenier
Chief — Branch
Date: 16 JULY 2009
Dwg Scale: AS NOTED
Plot Scale: 1:2
File: FTW336A_021-A1-01
Drawing # F-211-13-01

INV. NO. W911KB-09-R-0007
PN 65076
FTW336A

FT. WAINWRIGHT, ALASKA
AIRCRAFT PARTS STORAGE
ARCHITECTURAL
PLANS
OVERALL FLOOR PLAN

Reference number:
A1.01

Sheet 21 of 118

Drawing x:\UNIFIED\EN-TE\Jobs\FTW336A\Dwgs\FTW336A-021-A1-01.dwg last saved on 7/13/2009 9:32 AM was plotted by Curfew, Donald L POA on 7/17/2009 6:37 AM

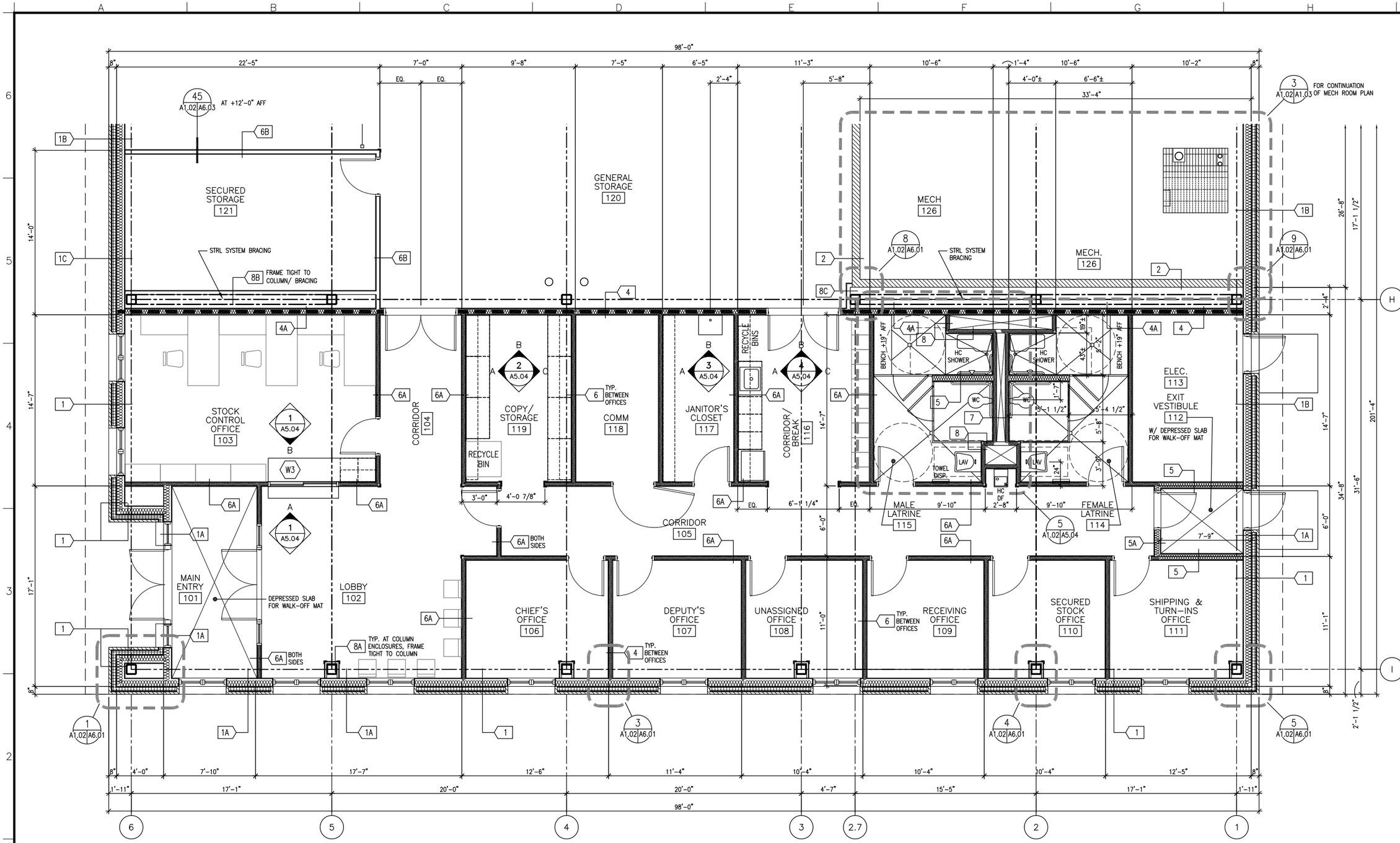

2 A1.01|A1.02 ENLARGED FLOOR PLAN @ ADMINISTRATIVE OFFICES

SCALE: 1/4"=1'-0"

1 HOUR FIRE RATED WALL

TRUE NORTH

PLAN NORTH

KEYPLAN

NOT FOR CONSTRUCTION

BACKCHECK

US ARMY CORPS OF ENGINEERS
ALASKA DISTRICT

CONTRACT NO. _____
CONTRACTOR _____
CITY _____ STATE _____
PRIME CONTRACTOR — Recommended: — RESIDENT ENGINEER — Approved: — Date: —

Symb	Action	Description	Date	Appvd

U.S. ARMY ENGINEER DISTRICT
CORPS OF ENGINEERS
ANCHORAGE, ALASKA

Designed: RWK
Drawn: RWK
Reviewed: Robert Clayton
Chief — Section
Submitted: D. Frenier
Chief — Branch
Date: 16 JULY 2009
Dwg Scale: AS NOTED
Plot Scale: 1:2
File: FTW336A_022-A1-02
Drawing # F-2-211-13-01

INV. NO. W911KB-09-R-0007
PN 65076
FTW336A

FT. WAINWRIGHT, ALASKA
AIRCRAFT PARTS STORAGE
ARCHITECTURAL
PLANS
ENLARGED FLOOR PLAN

Reference number:
A1.02
Sheet 22 of 118

Drawing x:\UNIFIED\EN-TE\Jobs\FTW336A\Dwgs\FTW336A-022-A1-02.dwg last saved on 7/13/2009 9:32 AM was plotted by Curfew, Donald L POA on 7/17/2009 6:37 AM

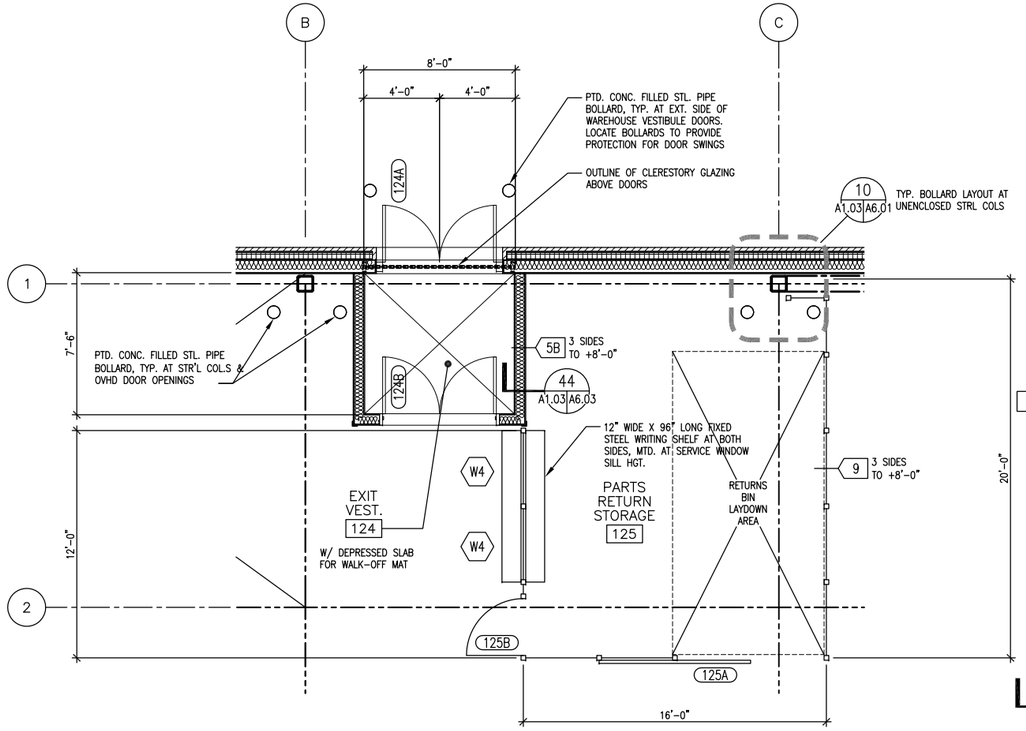

4 A1.01 A1.03 EXIT VESTIBULE RM 124

SCALE: 1/4"=1'-0"

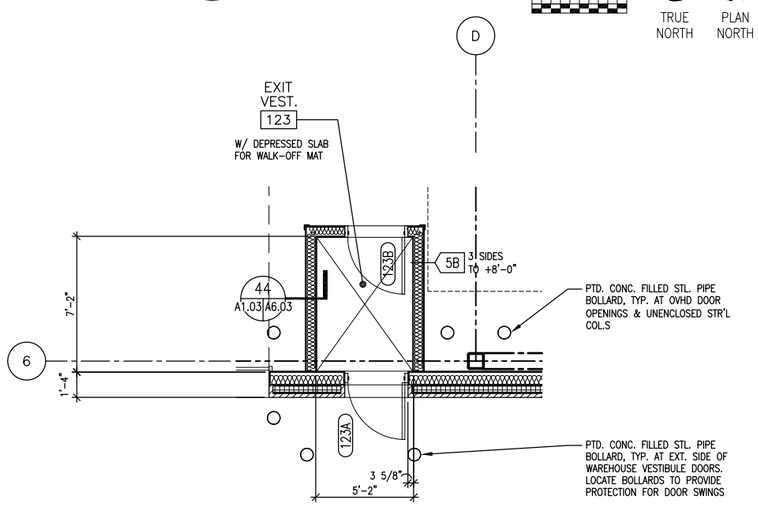

5 A1.01 A1.03 EXIT VESTIBULE RM 123

SCALE: 1/4"=1'-0"

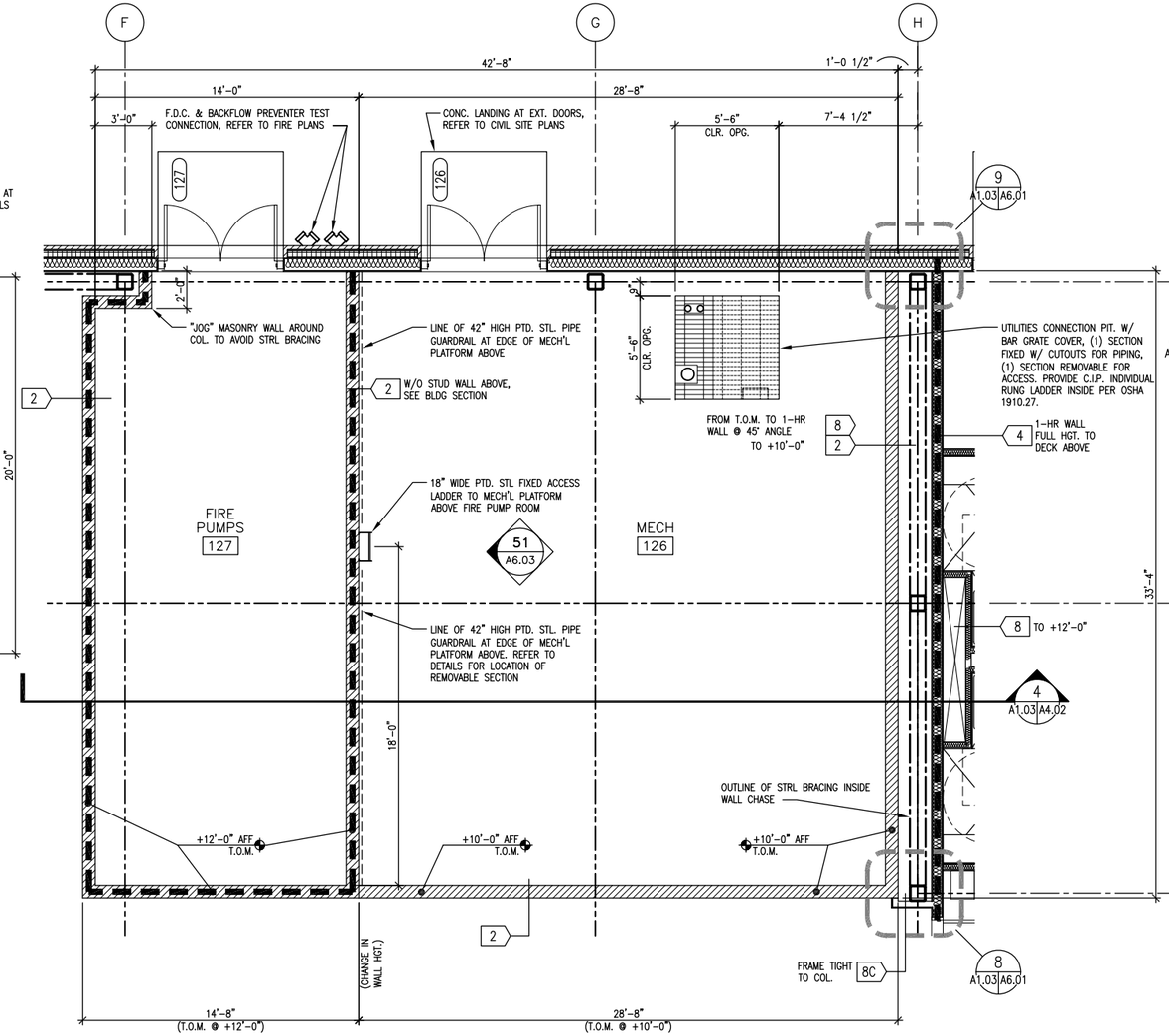

3 A1.01 A1.03 FIRE PUMP ROOM 127 & MECH'L ROOM 126

SCALE: 1/4"=1'-0"

TRUE NORTH PLAN NORTH

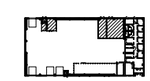

KEYPLAN

NOT FOR CONSTRUCTION

BACKCHECK

US ARMY CORPS OF ENGINEERS
ALASKA DISTRICT

CONTRACT NO. ___
CONTRACTOR ___
CITY ___ STATE ___
PRIME CONTRACTOR ___
Recommended: ___
RESIDENT ENGINEER ___
Approved: ___
Date: ___

Comp. Action	Description	Date	Approval

U.S. ARMY ENGINEER DISTRICT
CORPS OF ENGINEERS
ANCHORAGE, ALASKA

Designed: RWK
Drawn: RWK
Reviewed: Robert Clayton
Chief: ___ Section
Submitted: D. Frenier
Chief: ___ Branch
Date: 16 JULY 2009
Dwg Scale: AS NOTED
Plot Scale: 1:2
File: FTW336A-023-A1-03
Drawing #: F-211-13-01

PN 65076
INV. NO. W911KB-09-R-0007
FTW336A

FT. WAINWRIGHT, ALASKA
AIRCRAFT PARTS STORAGE
ARCHITECTURAL
PLANS
ENLARGED FLOOR PLAN

Reference number:
A1.03

Drawing x:\UNIFIED\EN-TE\Jobs\FTW336A\Dwgs\FTW336A-023-A1-03.dwg last saved on 7/13/2009 9:33 AM was plotted by Curfew, Donald L POA on 7/17/2009 6:37 AM

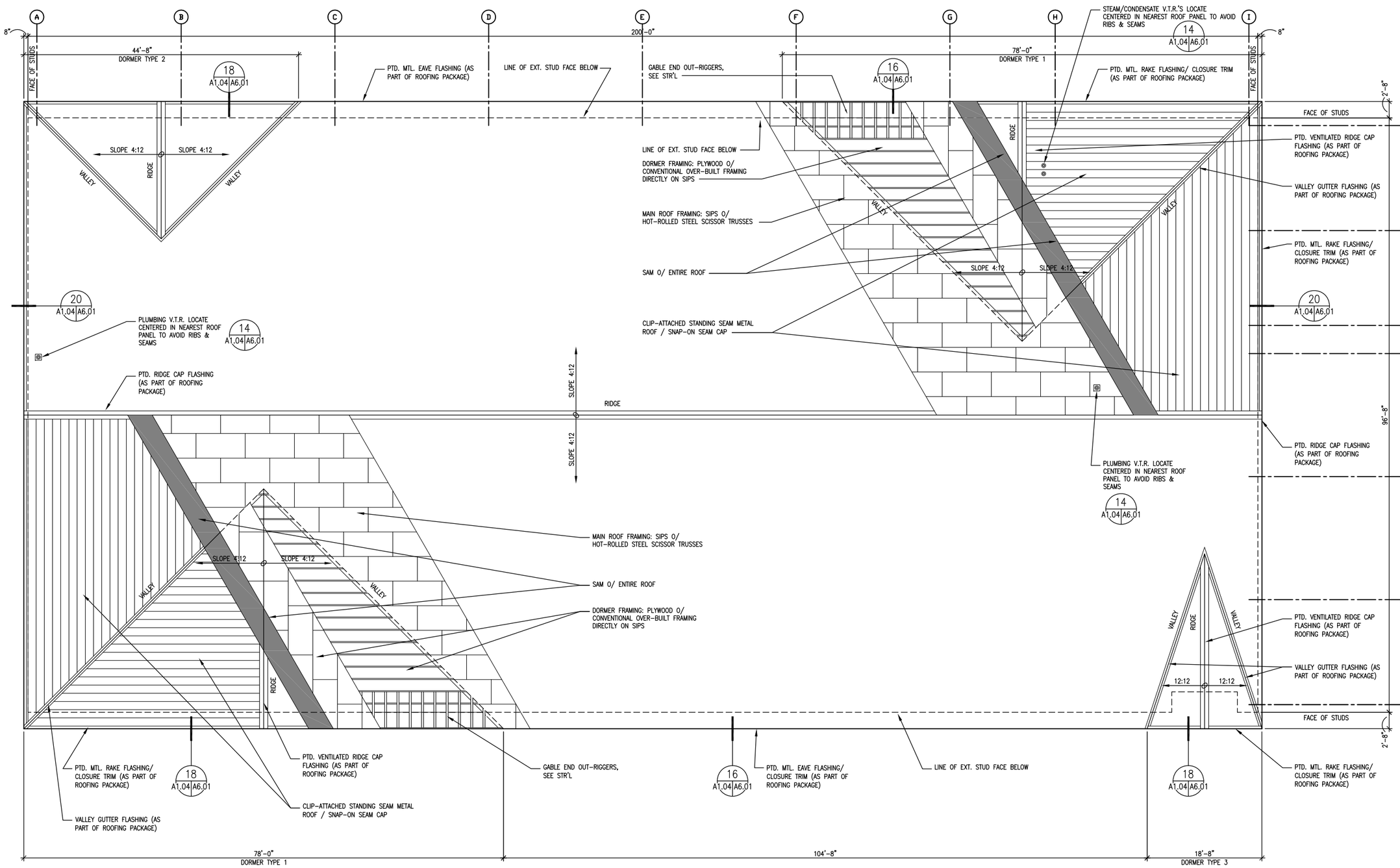

OVERALL ROOF PLAN

1 / A1.04 SCALE: 1/8"=1'-0"

ROOF VENTILATION CALCULATIONS:

REQUIRED VENTILATION: AREA OF DORMER X 1/150 = S.F. OF REQ'D VENTILATION

1. DORMER TYPE 1: 1,520 S.F. X 1/150 = 10 S.F OF REQ'D VENTILATION.
2. DORMER TYPE 2: 500 S.F. X 1/150 = 3.3 S.F. OF REQ'D VENTILATION
3. DORMER TYPE 3: 260 S.F. X 1/150 = 1.7 S.F. OF REQ'D VENTILATION

NOTES:

1. AT ALL DORMERS INSTALL VENTILATED RIDGE CAP FLASHING.
2. AT MAIN ROOF EAVE SOFFITS, INSTALL SOP-1 NON-VENTILATED SOFFIT PANELS.
3. AT ALL DORMER GABLES, INSTALL SOP-2 VENTILATED SOFFIT PANELS.

0 5' 10'

TRUE NORTH PLAN NORTH

KEYPLAN

NOT FOR CONSTRUCTION

BACKCHECK

US ARMY CORPS OF ENGINEERS
ALASKA DISTRICT

CONTRACT NO. _____
CONTRACTOR _____
CITY _____ STATE _____
PRIME CONTRACTOR _____
Recommended: _____
RESIDENT ENGINEER
Approved: _____
Date: _____

Mod. Action	Description	Date	Appvd

U.S. ARMY ENGINEER DISTRICT
CORPS OF ENGINEERS
ANCHORAGE, ALASKA

Designed: RWK
Drawn: RWK
Reviewed: Robert Clayton
Chief - CEPOA-EN-TE-SA - Section
Submitted: D. Frenier
Chief - CEPOA-EN-TE-SA - Section
Date: 16 JULY 2009
Dwg Scale: AS NOTED
Plot Scale: 1:2
File: FTW336A-024-A1-04
Drawing #: F-211-13-01

INV. NO. W911KB-09-R-0007
PN 65076
FTW336A

FT. WAINWRIGHT, ALASKA
AIRCRAFT PARTS STORAGE
ARCHITECTURAL
PLANS
OVERALL ROOF PLAN

Reference number:
A1.04

Drawing x:\UNIFIED\EN-TE\Jobs\FTW336A\Dwgs\FTW336A-024-A1-04.dwg last saved on 7/13/2009 9:33 AM was plotted by Curfew, Donald L POA on 7/17/2009 6:37 AM

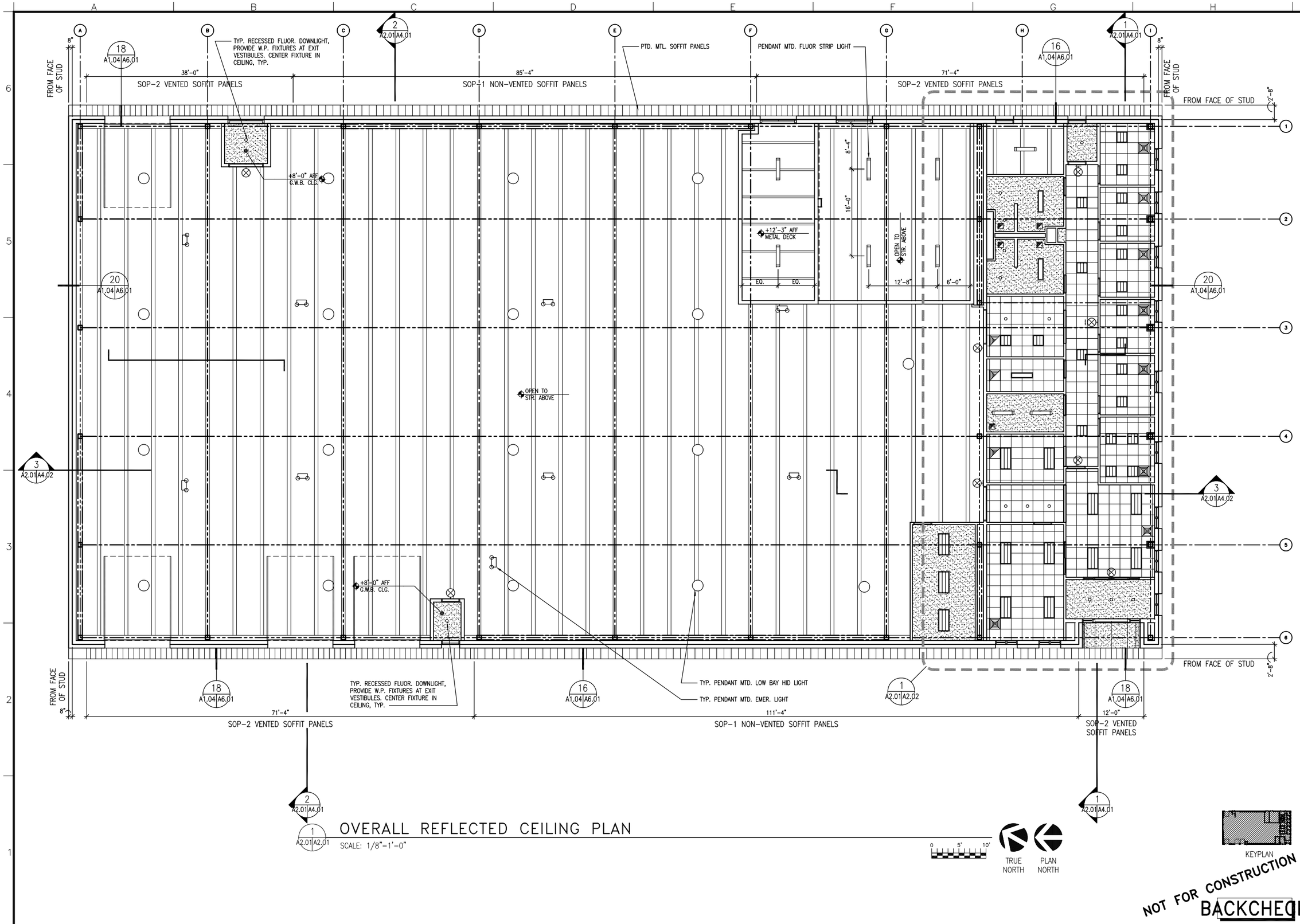

OVERALL REFLECTED CEILING PLAN

SCALE: 1/8"=1'-0"

US ARMY CORPS OF ENGINEERS
ALASKA DISTRICT

CONTRACT NO. _____
CONTRACTOR _____
CITY _____ STATE _____
PRIME CONTRACTOR _____ Recommended: _____
RESIDENT ENGINEER _____ Approved: _____ Date: _____

Symb.	Action	Description	Date	Appvd

U.S. ARMY ENGINEER DISTRICT
CORPS OF ENGINEERS
ANCHORAGE, ALASKA

Designed: RWK
Drawn: RWK
Reviewed: Robert Clayton
Chief – Section
Submitted: D. Frenier
Chief – Branch
Date: 16 JULY 2009
Dwg Scale: AS NOTED
Plot Scale: 1:2
File: FTW336A-025-A2-01
Drawing No. F-F-211-13-01

INV. NO. W911KB-09-R-0007
PN 65076
FTW336A

FT. WAINWRIGHT, ALASKA
AIRCRAFT PARTS STORAGE
ARCHITECTURAL
REFLECTED CEILING PLANS
OVERALL RELECTED CEILING PLAN

Reference number:
A2.01

Drawing x:\UNIFIED\EN-TE\Jobs\FTW336A\Dwgs\FTW336A-025-A2-01.dwg last saved on 7/13/2009 9:33 AM was plotted by Curfew, Donald L POA on 7/17/2009 6:37 AM

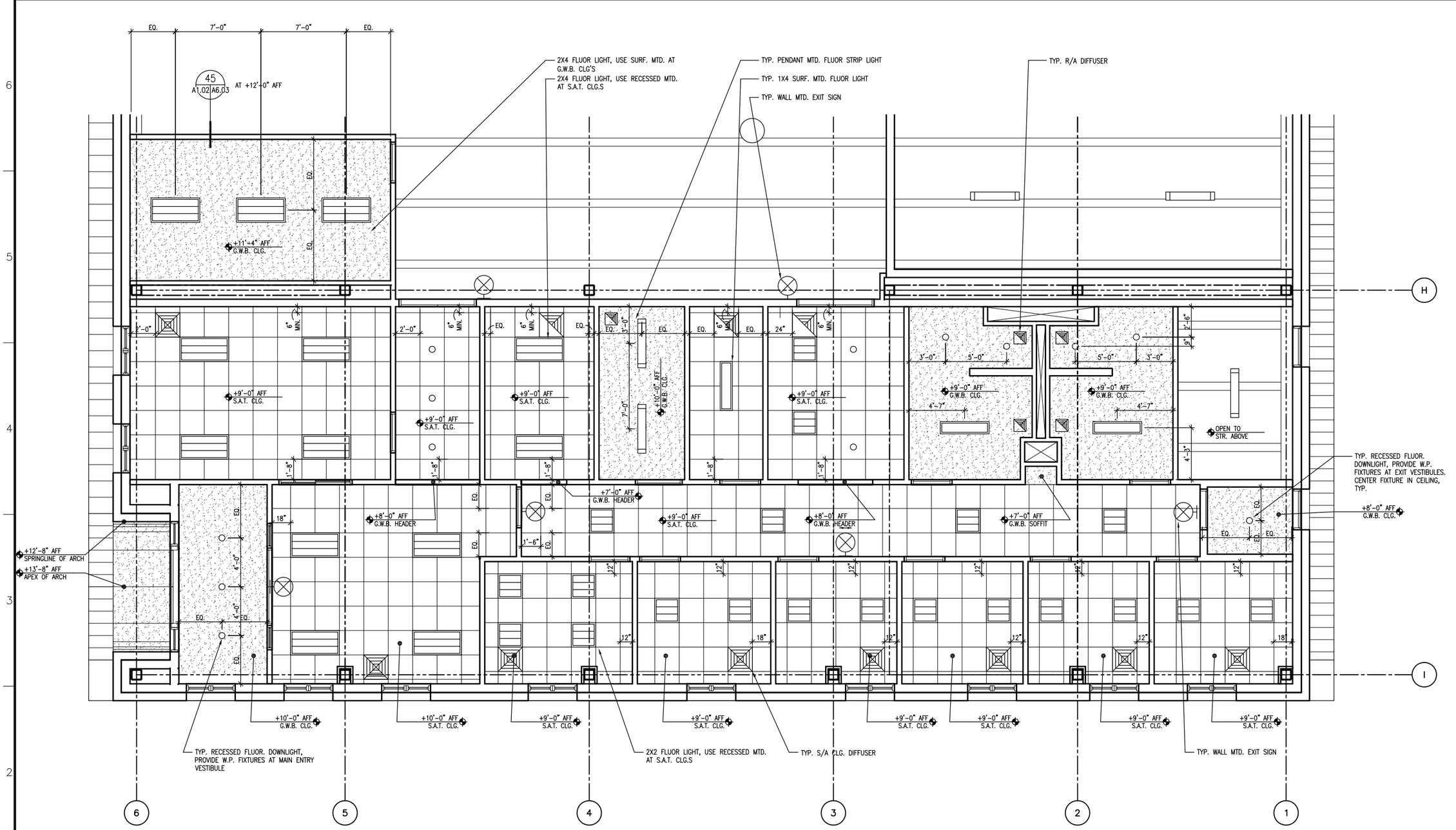

1 A2.01 A2.02 ENLARGED REFLECTED CEILING PLAN @ ADMINISTRATIVE OFFICES

SCALE: 1/4"=1'-0"

0 2' 4' 5'

TRUE NORTH

PLAN NORTH

KEYPLAN

NOT FOR CONSTRUCTION

BACKCHECK

US ARMY CORPS OF ENGINEERS
ALASKA DISTRICT

CONTRACT NO. _____
CONTRACTOR _____
CITY _____ STATE _____
PRIME CONTRACTOR _____
Recommended: _____
RESIDENT ENGINEER _____
Approved: _____
Date: _____

Mod.	Action	Description	Date	Appvd

U.S. ARMY ENGINEER DISTRICT
CORPS OF ENGINEERS
ANCHORAGE, ALASKA

Designed: RWK
Drawn: RWK
Reviewed: Robert Clayton
Chief: CEPOA-EN-TE-SA Section
Submitted: D. Frenier
Chief: CEPOA-EN-CD-ES Branch

Date: 16 JULY 2009
Dwg Scale: AS NOTED
Plot Scale: 1:2
File: FTW336A-026-A2-02
Drawing #: F-2211-13-01

INV. NO. W911KB-09-R-0007
PN 65076
FTW336A

FT. WAINWRIGHT, ALASKA
AIRCRAFT PARTS STORAGE
ARCHITECTURAL
REFLECTED CEILING PLANS
ENLARGED REFLECTED CEILING PLAN

Reference number:
A2.02

Drawing x:\UNIFIED\EN-TE\Jobs\FTW336A\Dwgs\FTW336A-026-A2-02.dwg last saved on 7/13/2009 9:34 AM was plotted by Curfew, Donald L POA on 7/17/2009 6:37 AM

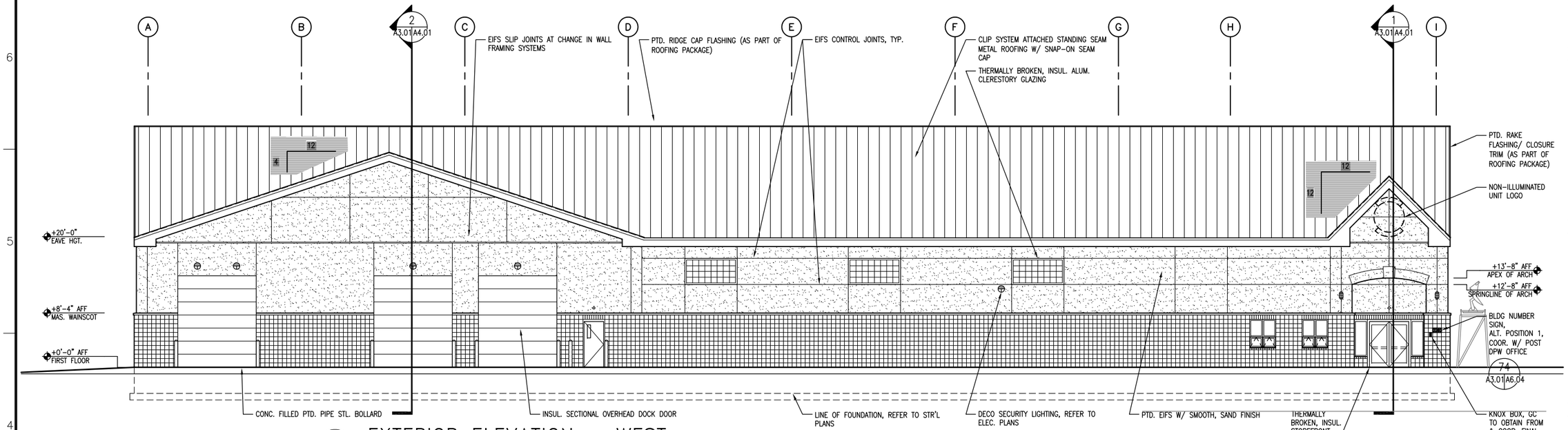

1 A1.01 A3.01 EXTERIOR ELEVATION – WEST

SCALE: 1/8"=1'-0"

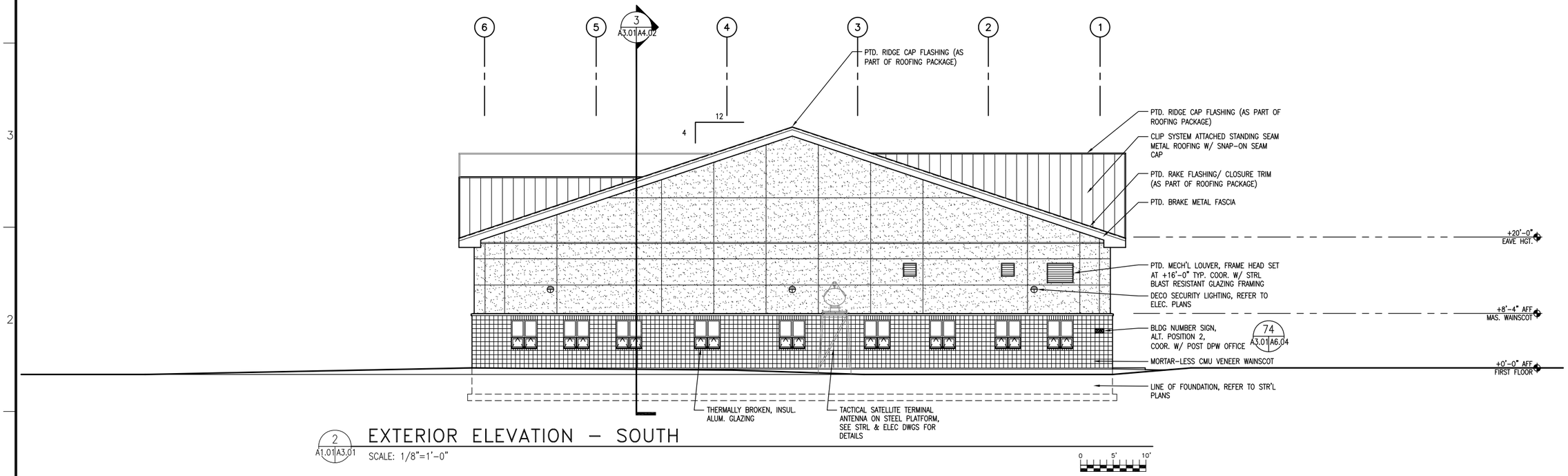

2 A1.01 A3.01 EXTERIOR ELEVATION – SOUTH

SCALE: 1/8"=1'-0"

US ARMY CORPS OF ENGINEERS
ALASKA DISTRICT

CONTRACT NO. _____
CONTRACTOR _____
CITY _____ STATE _____
PRIME CONTRACTOR _____
Recommended: _____
RESIDENT ENGINEER _____
Approved: _____
Date: _____

Symb	Action	Description	Date	Appvd

U.S. ARMY ENGINEER DISTRICT
CORPS OF ENGINEERS
ANCHORAGE, ALASKA

Designed: R.W.K.
Drawn: R.W.K.
Reviewed: Robert Clayton
Chief – Design – Section
Submitted: D. Frenner
Chief – Design – Section

Date: 16 JULY 2009
Dwg Scale: AS NOTED
Plot Scale: 1:2
File: FTW336A-027-A3-01
Drawing # F-211-13-01

INV. NO. W911KB-09-R-0007
PN 65076
FTW336A

FT. WAINWRIGHT, ALASKA
AIRCRAFT PARTS STORAGE
ARCHITECTURAL
ELEVATIONS
ELEVATION VIEWS

Reference number:
A3.01

NOT FOR CONSTRUCTION
BACKCHECK

Drawing x:\UNIFIED\EN-TE\Jobs\FTW336A\Dwgs\FTW336A-027-A3-01.dwg last saved on 7/13/2009 9:34 AM was plotted by Curfew, Donald L POA on 7/17/2009 6:37 AM

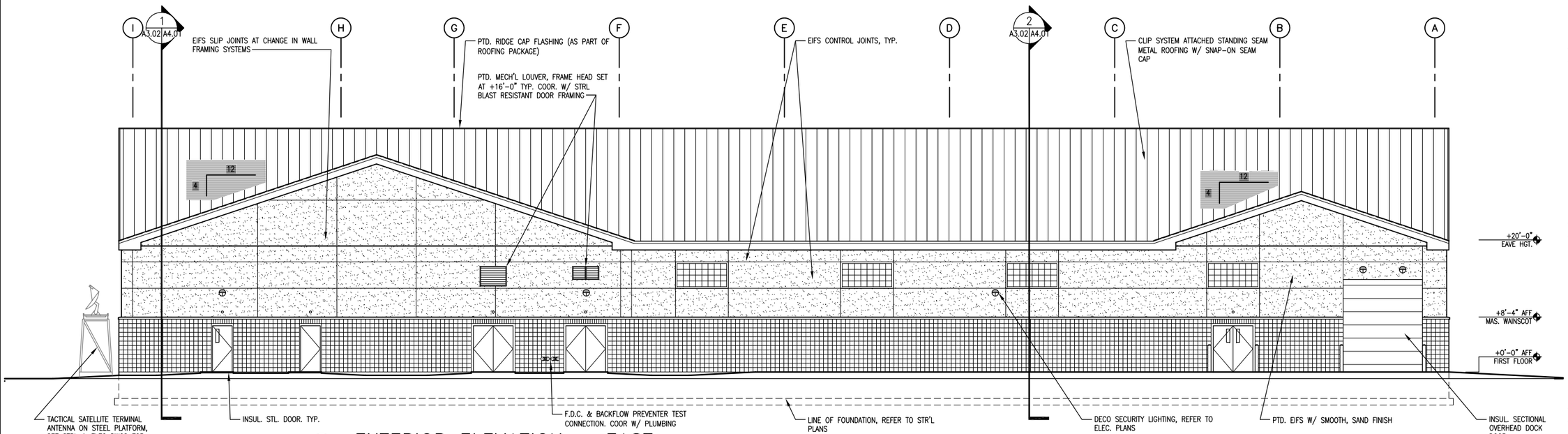

3 A1.01 A3.02 EXTERIOR ELEVATION – EAST

SCALE: 1/8"=1'-0"

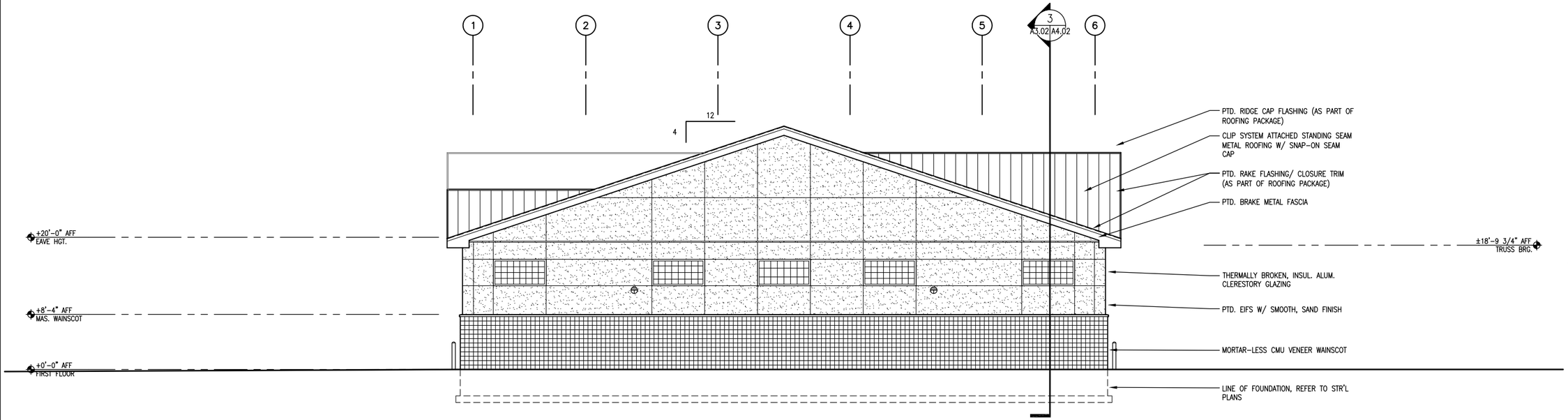

4 A1.01 A3.02 EXTERIOR ELEVATION – NORTH

SCALE: 1/8"=1'-0"

US ARMY CORPS OF ENGINEERS
ALASKA DISTRICT

CONTRACT NO. _____
CONTRACTOR _____
CITY _____ STATE _____
PRIME CONTRACTOR _____
Recommended: _____ RESIDENT ENGINEER
Approved: _____ Date: _____

Symb	Action	Description	Date	Appvd

U.S. ARMY ENGINEER DISTRICT
CORPS OF ENGINEERS
ANCHORAGE, ALASKA

Designed: R.W.K.
Drawn: R.W.K.
Reviewed: Robert Clayton
Chief – Design – Section
Submitted: D. Frenner
Chief – Design – Section

Date: 16 JULY 2009
Dwg Scale: AS NOTED
Plot Scale: 1:2
File: FTW336A-028-A3-02
Drawing #: F-211-13-01

CONTRACT NO. W911KB-09-R-0007
PN 65076
FTW336A

FT. WAINWRIGHT, ALASKA
AIRCRAFT PARTS STORAGE
ARCHITECTURAL
ELEVATIONS
ELEVATION VIEWS

Reference number:
A3.02

NOT FOR CONSTRUCTION
BACKCHECK

Drawing x:\UNIFIED\EN-TE\Jobs\FTW336A\Dwgs\FTW336A-028-A3-02.dwg last saved on 7/13/2009 9:34 AM was plotted by Curfew, Donald L POA on 7/17/2009 6:37 AM

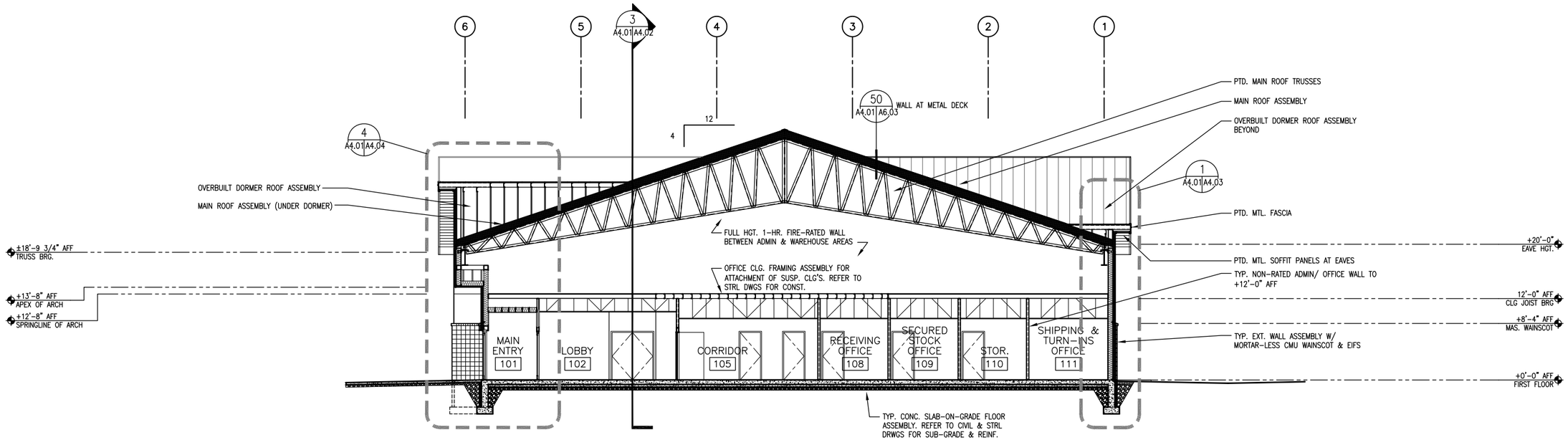

1 A1.01 A4.01 BUILDING SECTION – TRANSVERSE THRU ADMINISTRATION

SCALE: 1/8"=1'-0"

0 5' 10'

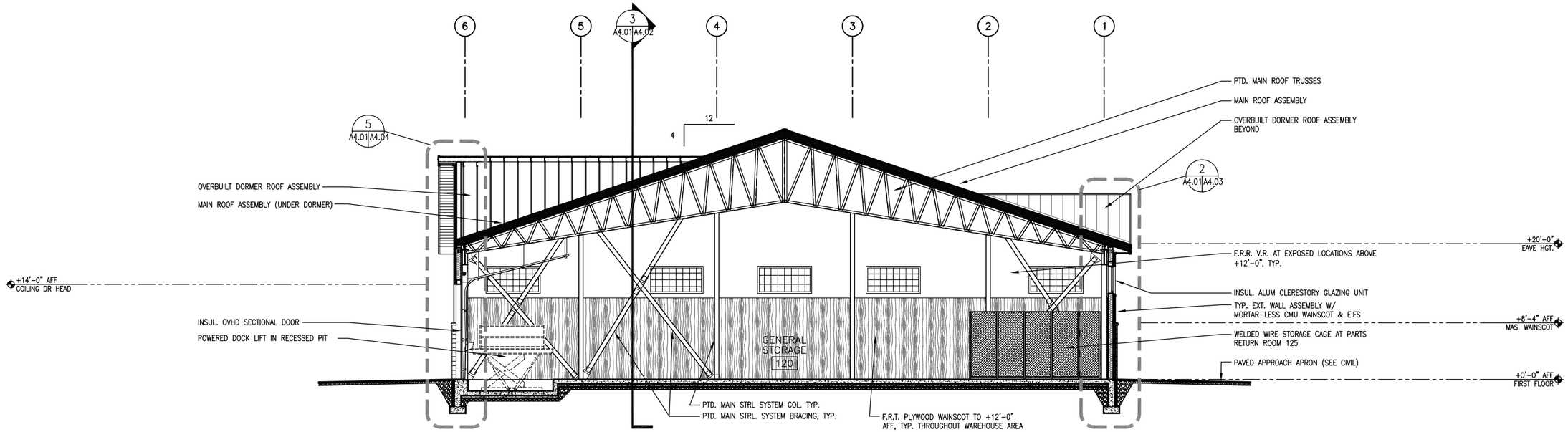

2 A1.01 A4.01 BUILDING SECTION – TRANSVERSE THRU WAREHOUSE

SCALE: 1/8"=1'-0"

0 5' 10'

NOT FOR CONSTRUCTION

BACKCHECK

US ARMY CORPS OF ENGINEERS
ALASKA DISTRICT

PRIME CONTRACTOR | Recommended: | CITY | CONTRACTOR | CONTRACT NO.
RESIDENT ENGINEER | Approved: | STATE | Date:

Symb	Action	Description	Date	Appvd

U.S. ARMY ENGINEER DISTRICT
CORPS OF ENGINEERS
ANCHORAGE, ALASKA

Designed: R.W.K.
Drawn: R.W.K.
Reviewed: Robert Clayton
Chief – Design Section
Submitted: D. Frenier
Chief – Design Section

Date: 16 JULY 2009
Dwg Scale: AS NOTED
Plot Scale: 1:2
File: FTW336A-029-A4-01
Drawing # F-211-13-01

INV. NO. W911KB-09-R-0007
PN 65076
FTW336A

FT. WAINWRIGHT, ALASKA
AIRCRAFT PARTS STORAGE
ARCHITECTURAL
SECTIONS
BUILDING SECTIONS

Reference number:
A4.01

Drawing x:\UNIFIED\EN-TE\Jobs\FTW336A\Dwgs\FTW336A-029-A4-01.dwg last saved on 7/13/2009 9:35 AM was plotted by Curfew, Donald L POA on 7/17/2009 6:38 AM

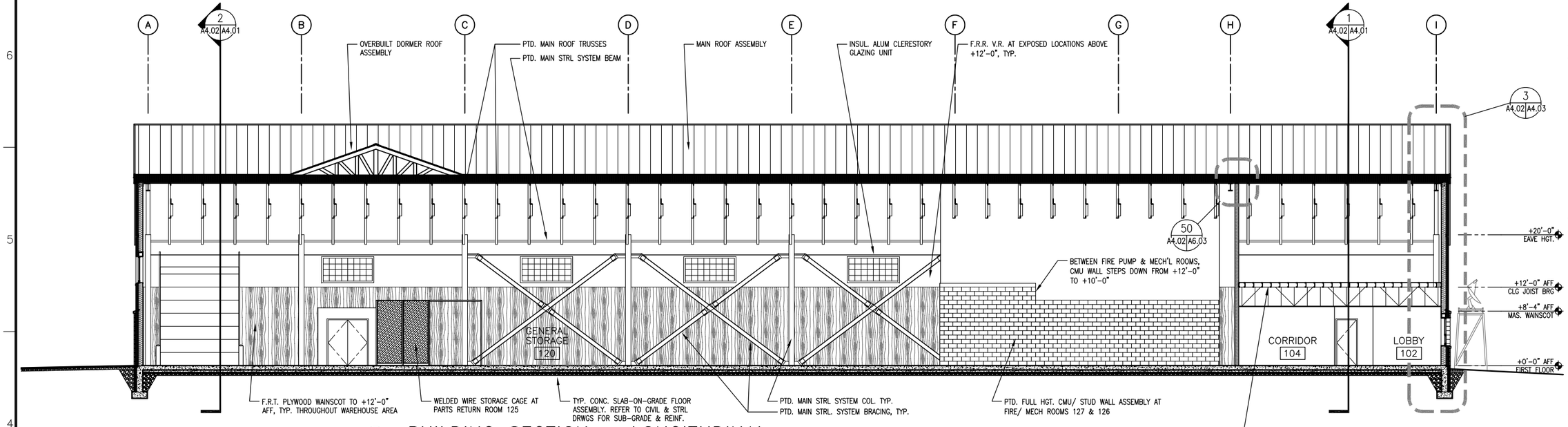

3 A1.01 A4.02 BUILDING SECTION – LONGITUDINAL

SCALE: 1/8"=1'-0"

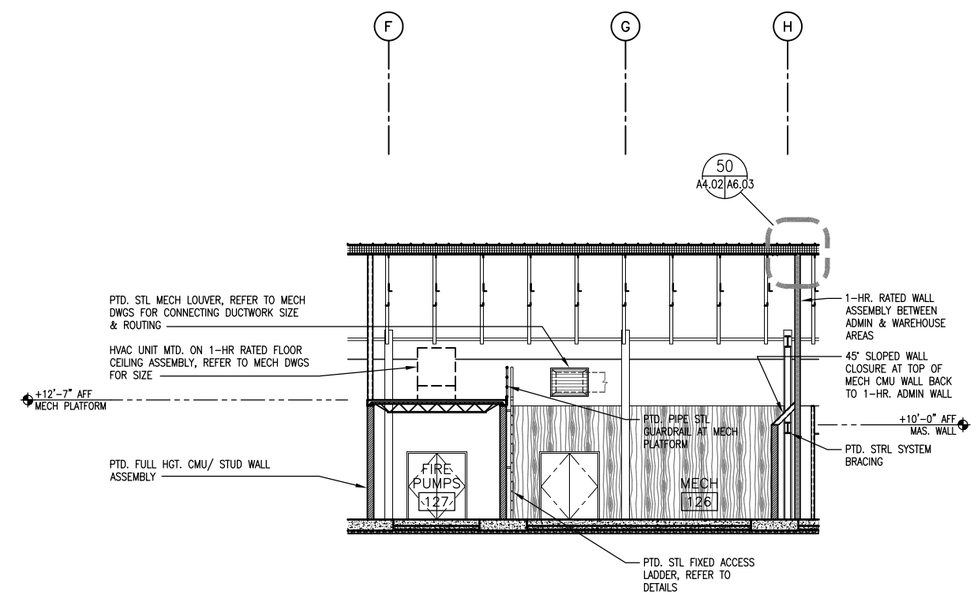

4 A1.03 A4.02 PARTIAL SECTION – MECH ROOM

SCALE: 1/8"=1'-0"

NOT FOR CONSTRUCTION

BACKCHECK

US ARMY CORPS OF ENGINEERS
ALASKA DISTRICT

CONTRACT NO. _____
CONTRACTOR _____
CITY _____ STATE _____
PRIME CONTRACTOR _____
Recommended: _____
RESIDENT ENGINEER _____
Approved: _____
Date: _____

Dwg Action	Description	Date	Appvd

U.S. ARMY ENGINEER DISTRICT
CORPS OF ENGINEERS
ANCHORAGE, ALASKA

Designed: R.W.K.
Drawn: R.W.K.
Reviewed: Robert Clayton
Chief – Section
Submitted: D. Frenier
Chief – Branch
Date: 16 JULY 2009
Dwg Scale: AS NOTED
Plot Scale: 1:2
File: FTW336A-030-A4-02
Drawing #: F-211-13-01

INV. NO. W911KB-09-R-0007
PN 65076
FTW336A

FT. WAINWRIGHT, ALASKA
AIRCRAFT PARTS STORAGE
ARCHITECTURAL
SECTIONS
BUILDING SECTIONS

Reference number:
A4.02

Drawing x:\UNIFIED\EN-TE\Jobs\FTW336A\Dwgs\FTW336A-030-A4-02.dwg last saved on 7/13/2009 9:35 AM was plotted by Curfew, Donald L POA on 7/17/2009 6:38 AM

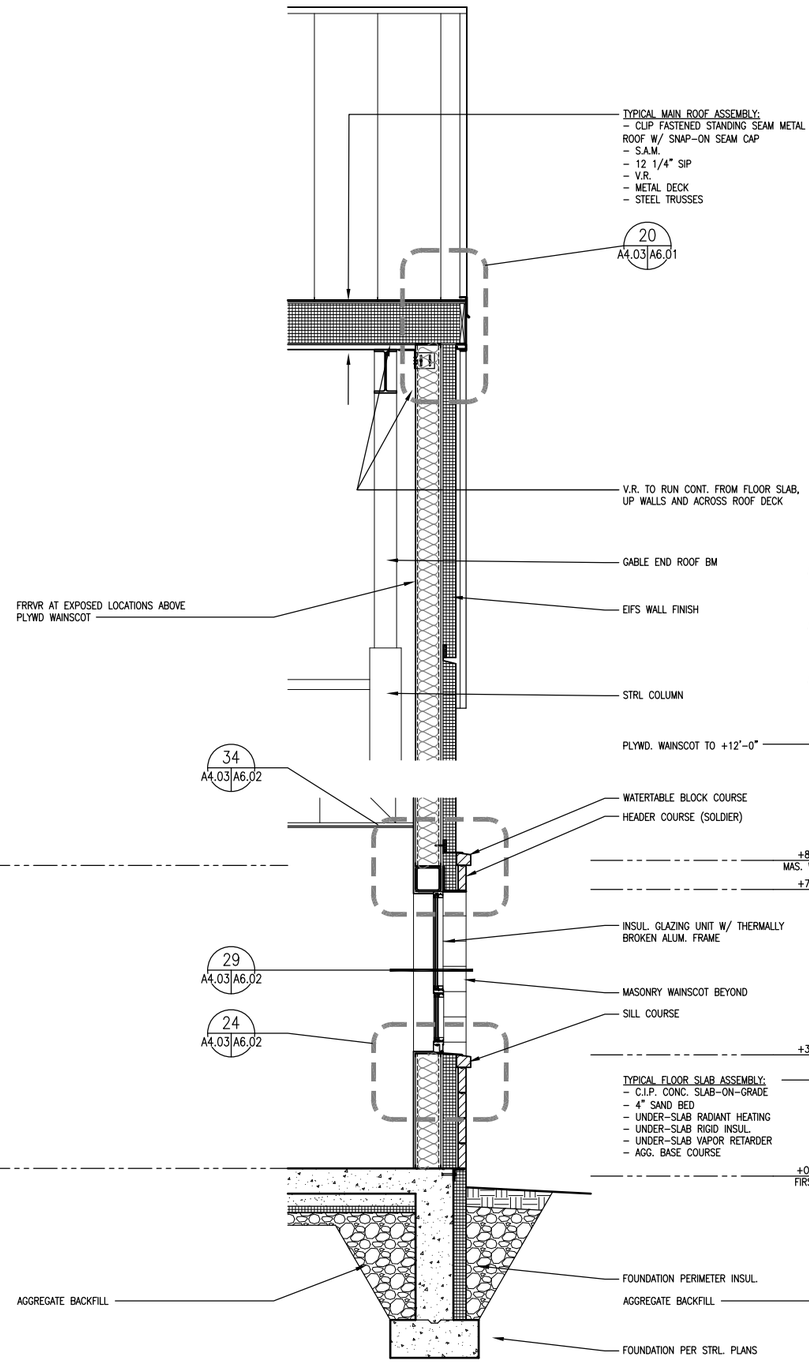

3 A4.02 A4.03 WALL SECTION
SCALE: 1/2"=1'-0"

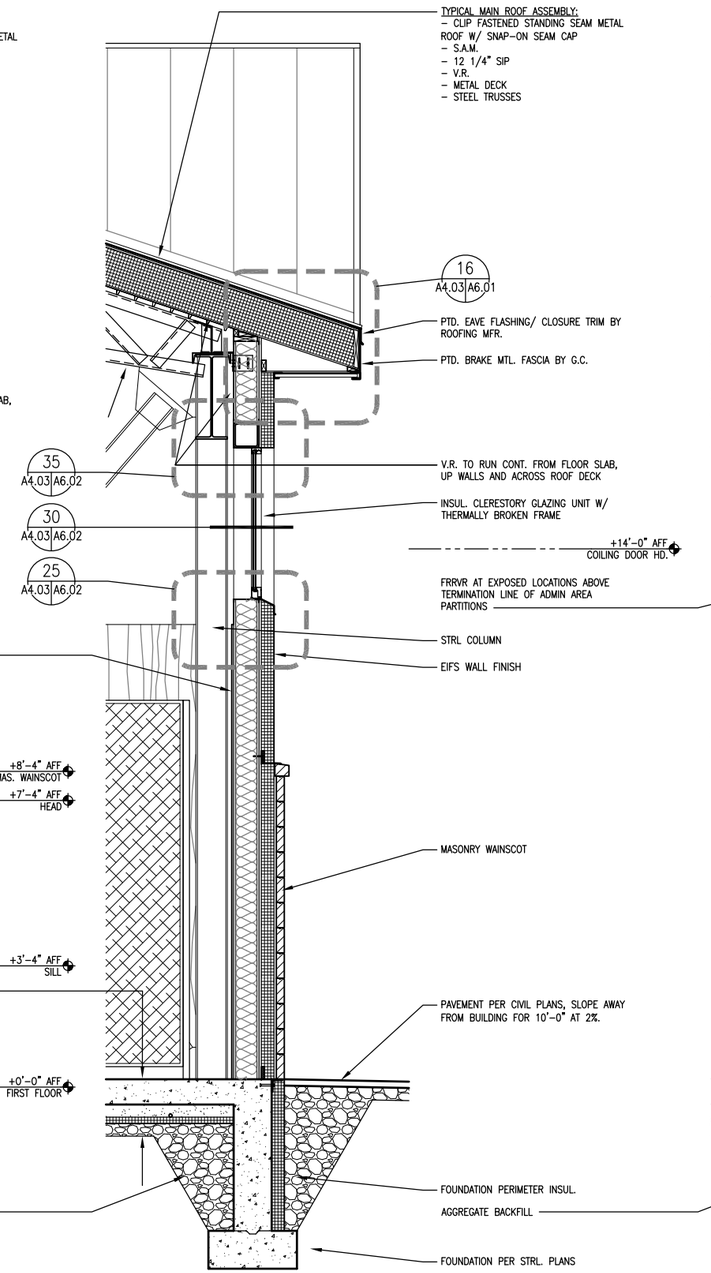

2 A4.01 A4.03 WALL SECTION
SCALE: 1/2"=1'-0"

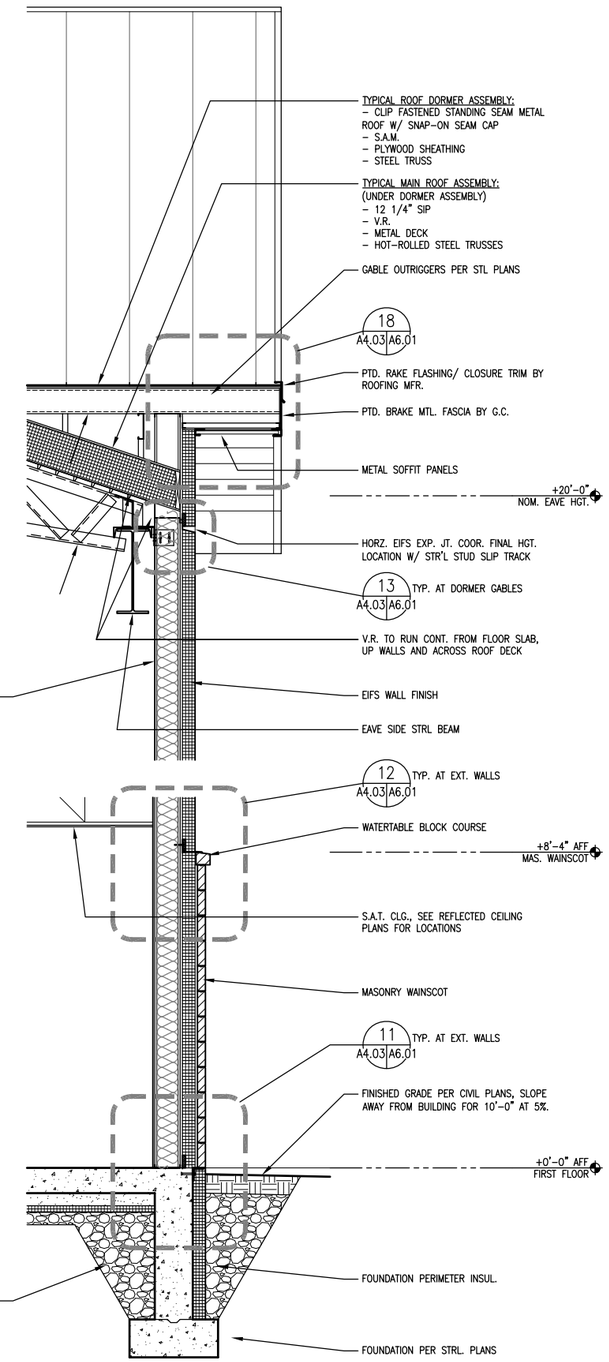

1 A4.01 A4.03 WALL SECTION
SCALE: 1/2"=1'-0"

NOT FOR CONSTRUCTION
BACKCHECK

US ARMY CORPS OF ENGINEERS
ALASKA DISTRICT

CONTRACT NO. _____
CONTRACTOR _____
CITY _____ STATE _____
PRIME CONTRACTOR _____
Recommended: _____
RESIDENT ENGINEER _____
Approved: _____
Date: _____

Num	Action	Description	Date	Appvd

U.S. ARMY ENGINEER DISTRICT
CORPS OF ENGINEERS
ANCHORAGE, ALASKA

Designed: R.W.K.
Drawn: R.W.K.
Reviewed: Robert Clayton
Chief — CEPOA-EN-TE-SA — Section
Submitted: D. Frenier
Chief — CEPOA-EN-TE — Branch
Date: 16 JULY 2009
Dwg Scale: AS NOTED
Plot Scale: 1:2
File: FTW336A-031-A4-03
Drawing No. W-F-211-13-01

INV. NO. W911KB-09-R-0007
PN 65076
FTW336A

FT. WAINWRIGHT, ALASKA
AIRCRAFT PARTS STORAGE
ARCHITECTURAL
SECTIONS
WALL SECTIONS

Reference number:
A4.03
Sheet 31 of 118

Drawing x:\UNIFIED\EN-TE\Jobs\FTW336A\Dwgs\FTW336A-031-A4-03.dwg last saved on 7/13/2009 9:35 AM was plotted by Curfew, Donald L POA on 7/17/2009 6:38 AM

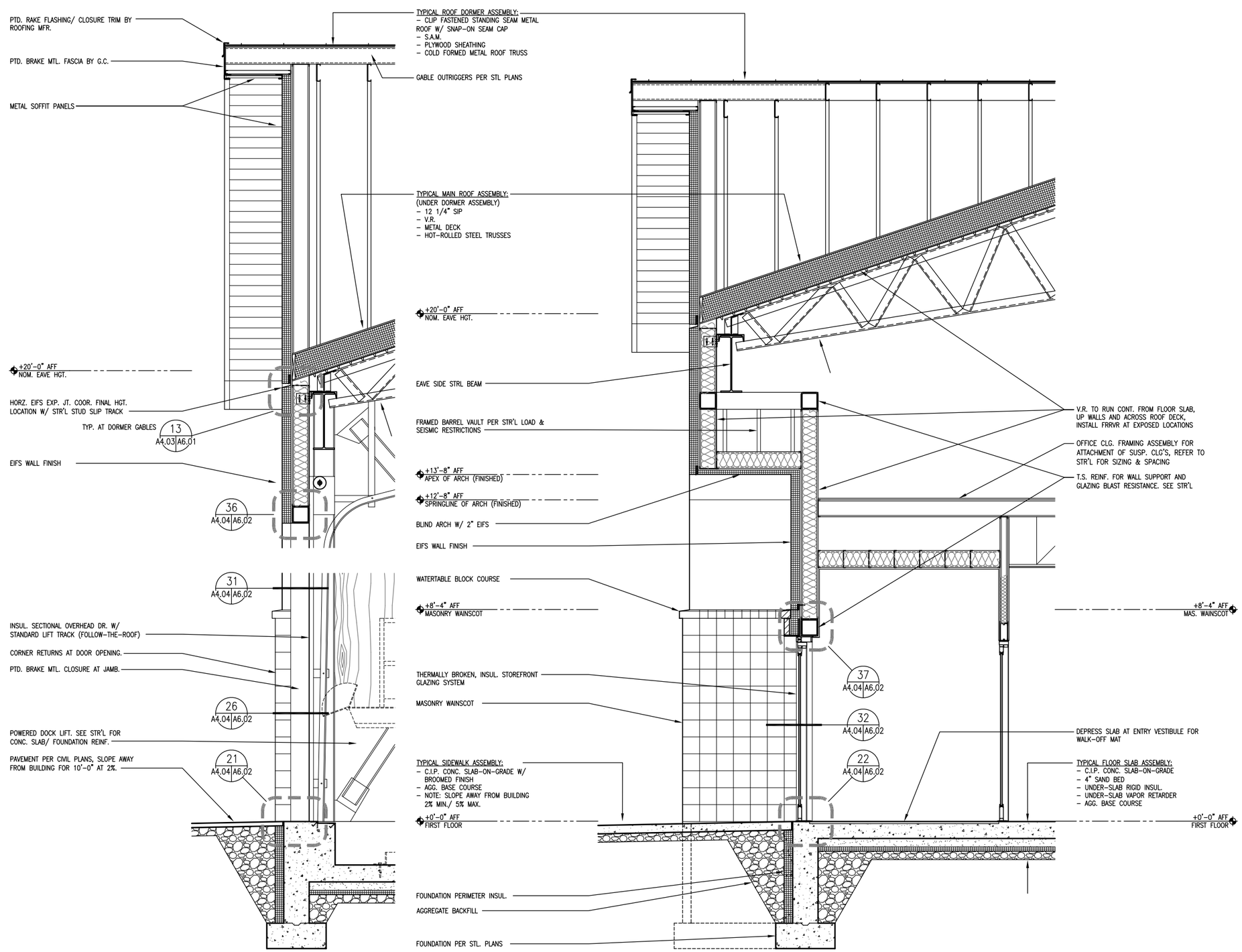

5 A4.01 A4.04 WALL SECTION
SCALE: 1/2"=1'-0"

4 A4.01 A4.04 WALL SECTION
SCALE: 1/2"=1'-0"

NOT FOR CONSTRUCTION
BACKCHECK

US ARMY CORPS OF ENGINEERS
ALASKA DISTRICT

CONTRACT NO. _____
CONTRACTOR _____
CITY _____ STATE _____
PRIME CONTRACTOR _____
Recommended: _____
RESIDENT ENGINEER _____
Approved: _____
Date: _____

Symb.	Action	Description	Date	Appvd

U.S. ARMY ENGINEER DISTRICT
CORPS OF ENGINEERS
ANCHORAGE, ALASKA

Designed: R.W.K.
Drawn: R.W.K.
Reviewed: Robert Clayton
Chief — Grade-To-It-Sa — Section
Submitted: D. Frenner
Chief — Grade-To-It-Sa — Section
Date: 16 JULY 2009
Dwg Scale: AS NOTED
Plot Scale: 1:2
File: FTW336A_032-A4-04
Drawing #: F-211-13-01

INV. NO. W911KB-09-R-0007
PN 65076
FTW336A

FT. WAINWRIGHT, ALASKA
AIRCRAFT PARTS STORAGE
ARCHITECTURAL
SECTIONS
WALL SECTIONS

Reference number:
A4.04

Drawing x:\UNIFIED\EN-TE\Jobs\FTW336A\Dwgs\FTW336A-032-A4-04.dwg last saved on 7/13/2009 9:36 AM was plotted by Curfew, Donald L POA on 7/17/2009 6:38 AM

DOOR AND FRAME SCHEDULE

NUMBER	WIDTH	HEIGHT	DOOR THICK	DOOR TYPE	DOOR MAT.	DOOR FIN.	DOOR LABEL	FRAME TYPE	FRAME MAT.	FRAME FIN.	HARDWARE TYPE	NOTES
101A	PR 3'-0"	7'-0"	1-3/4"	D1	ALUM	FF		F1	ALUM	FF	HW-1	NOTES
101B	PR 3'-0"	7'-0"	1-3/4"	D1	ALUM	FF		F1	ALUM	FF	HW-2	
103	3'-0"	7'-0"	1-3/4"	D4	HM	PT		F3	HM	PT	HW-13	
104	PR 3'-0"	7'-0"	1-3/4"	D2	IHM	PT	45 MIN.	F3	IHM	PT	HW-7	
105	3'-0"	7'-0"	1-3/4"	D4	WD	ST		F3	HM	PT	HW-8	
106	3'-0"	7'-0"	1-3/4"	D4	WD	ST		F3	HM	PT	HW-13	
107	3'-0"	7'-0"	1-3/4"	D4	WD	ST		F3	HM	PT	HW-13	
108	3'-0"	7'-0"	1-3/4"	D4	WD	ST		F3	HM	PT	HW-13	
109	3'-0"	7'-0"	1-3/4"	D4	WD	ST		F3	HM	PT	HW-13	
110	3'-0"	7'-0"	1-3/4"	D4	WD	ST		F3	HM	PT	HW-13	
111	3'-0"	7'-0"	1-3/4"	D4	WD	ST		F3	HM	PT	HW-13	
112A	3'-0"	7'-0"	1-3/4"	D1	IHM	PT		F2	IHM	PT	HW-5	
112B	3'-0"	7'-0"	1-3/4"	D1	IHM	PT		F3	IHM	PT	HW-6	
113	3'-0"	7'-0"	1-3/4"	D3	IHM	PT		F3	IHM	PT	HW-9	
114	3'-0"	7'-0"	1-3/4"	D4	WD	ST		F3	HM	PT	HW-10	
115	3'-0"	7'-0"	1-3/4"	D4	WD	ST		F3	HM	PT	HW-10	
116	PR 3'-0"	7'-0"	1-3/4"	D2	IHM	PT	45 MIN.	F3	IHM	PT	HW-7	
117	3'-0"	7'-0"	1-3/4"	D4	WD	ST		F3	HM	PT	HW-8	
118	3'-0"	7'-0"	1-3/4"	D4	WD	ST		F3	HM	PT	HW-14	
120A	12'-0"	14'-0"	–	D5	STL	FF		–	STL	FF	HW-12	
120B	12'-0"	14'-0"	–	D5	STL	FF		–	STL	FF	HW-12	
120C	12'-0"	14'-0"	–	D5	STL	FF		–	STL	FF	HW-12	
120D	12'-0"	14'-0"	–	D5	STL	FF		–	STL	FF	HW-12	
121	3'-0"	7'-0"	1-3/4"	D3	HM	PT		F3	HM	PT	HW-14	
122	8'-0"	10'-0"	–	D6	STL	FF		–	STL	FF	*	SEE SPEC SECTION 10 22 13 (WIRE MESH PARTITIONS)
123A	3'-0"	7'-0"	1-3/4"	D2	IHM	PT		F2	IHM	PT	HW-5	
123B	3'-0"	7'-0"	1-3/4"	D2	IHM	PT		F3	IHM	PT	HW-6	
124A	PR 3'-0"	7'-0"	1-3/4"	D2	IHM	PT		F2	IHM	PT	HW-3	
124B	PR 3'-0"	7'-0"	1-3/4"	D2	IHM	PT		F3	IHM	PT	HW-4	
125A	8'-0"	10'-0"	–	D6	STL	FF		–	STL	FF	*	SEE SPEC SECTION 10 22 13 (WIRE MESH PARTITIONS)
125B	3'-0"	7'-0"	–	D7	STL	FF		–	STL	FF	*	SEE SPEC SECTION 10 22 13 (WIRE MESH PARTITIONS)
126	PR 3'-0"	7'-0"	1-3/4"	D3	IHM	PT		F2	IHM	PT	HW-11	
127	PR 3'-0"	7'-0"	1-3/4"	D3	IHM	PT		F2	IHM	PT	HW-11	

DOOR TYPES

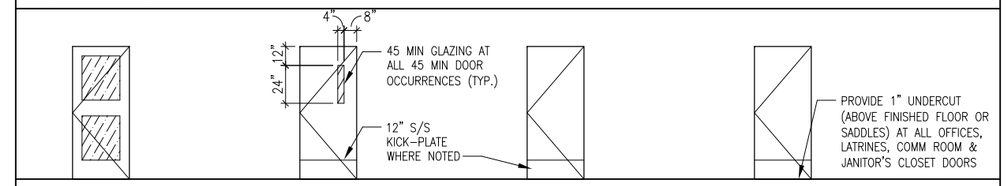

D1
MFR: KAWNEER
SERIES: 350 HEAVY WALL ENTRANCE
LEVEL: 3 EXTRA HEAVY DUTY
MODEL: MEDIUM STILE
INSULATED: YES
GLAZING:
EXT. DR.: LOW-E, TEMP
INT. DR.: CLEAR, TEMP

D2
MFR: CECO DOOR
SERIES: ULTRADOR
LEVEL: 3 EXTRA HEAVY DUTY
MODEL: 2, 14 GA. SEAMLESS
INSULATED: YES AT EXTERIOR
GLAZING:
EXT. DR.: WIRED GLASS, TEMP.
INT. DR.: FIRE GLASS, TEMP.

D3
MFR: CECO DOOR
SERIES: ULTRADOR
LEVEL: 3 EXTRA HEAVY DUTY
MODEL: 2, 14 GA. SEAMLESS
INSULATED: YES AT EXTERIOR
GLAZING: NO

D4
MFR: NOT SPECIFIED
SERIES: STAIN GRADE, SOLID CORE WD
LEVEL: 2 HEAVY DUTY COMMERCIAL
MODEL: NOT SPECIFIED
INSULATED: NO
GLAZING: NO

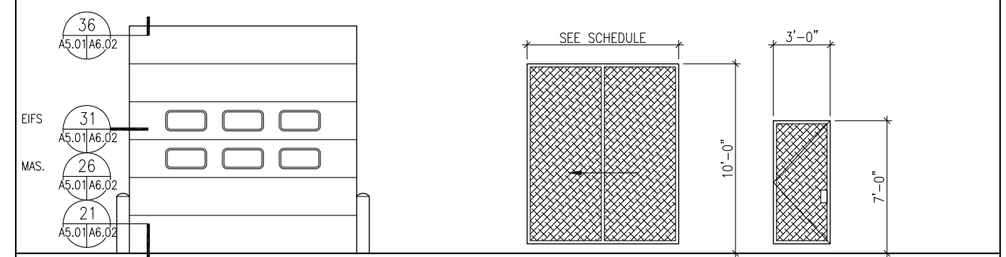

D5
MFR: OVERHEAD DOOR CORP.
SERIES: INSUL. STL. OVERHEAD SECTIONAL
LEVEL: N/A
MODEL: 592
INSULATED: YES, THERMACORE
GLAZING: YES, INSUL., TEMPERED

D6
MFR: FOLDING GUARD
SERIES: QWIK-FENCE
LEVEL: STANDARD
MODEL: SLIDING DOOR
INSULATED: NO
GLAZING: NO

D7
MFR: FOLDING GUARD
SERIES: QWIK-FENCE
LEVEL: STANDARD
MODEL: HINGED DOOR
INSULATED: NO
GLAZING: NO

WINDOW TYPES

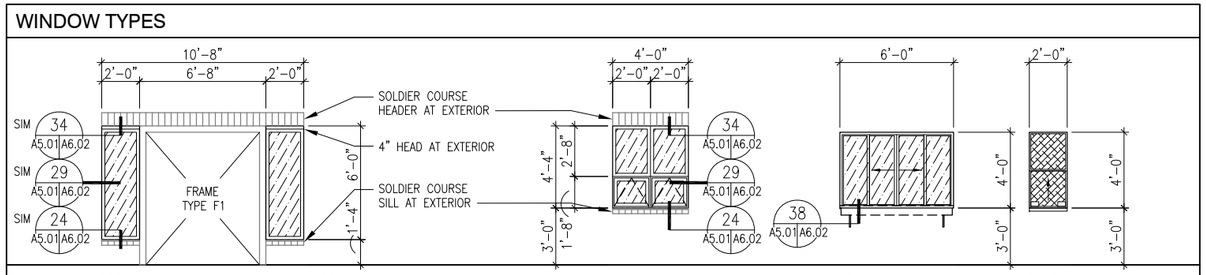

W1 (EXT. UNIT – FIXED)
MFR: KAWNEER
SERIES: 350 HEAVY WALL ENTRANCE
LEVEL: BLAST RESISTANT
INSULATED: YES
THERMALLY BROKEN: YES
GLAZING: INSUL, LOW-E, TEMPERED

W1 (INT. UNIT – FIXED)
MFR: KAWNEER
SERIES: 350 HEAVY WALL ENTRANCE
LEVEL: BLAST RESISTANT
INSULATED: NO
THERMALLY BROKEN: NO
GLAZING: CLEAR, TEMPERED

W2 (FIXED/OPERABLE)
MFR: KAWNEER
SERIES: 8325TL ISOLOCK WINDOWS
LEVEL: BLAST RESISTANT
INSULATED: YES
THERMALLY BROKEN: YES
GLAZING: INSUL, LOW-E, TEMPERED

W3 (OPERABLE)
MFR: NOT SPECIFIED
SERIES: ALUM. SLIDER
LEVEL: N/A
INSULATED: NO
THERMALLY BROKEN: NO
GLAZING: CLEAR TEMPERED

W4 (OPERABLE)
MFR: FOLDING GUARD
SERIES: QWIK-FENCE
LEVEL: STANDARD
MODEL: SERVICE WINDOW
INSULATED: NO
GLAZING: NO

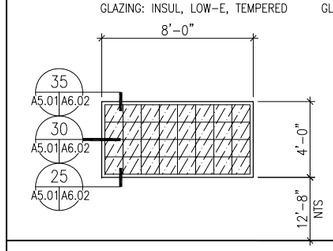

W5 (FIXED)
MFR: KAWNEER
SERIES: 8325TL ISOLOCK WINDOWS
W/ INTERNAL APPLIED MUNTINS
LEVEL: BLAST RESISTANT
INSULATED: YES
THERMALLY BROKEN: YES
GLAZING: INSUL, LOW-E

FRAME TYPES

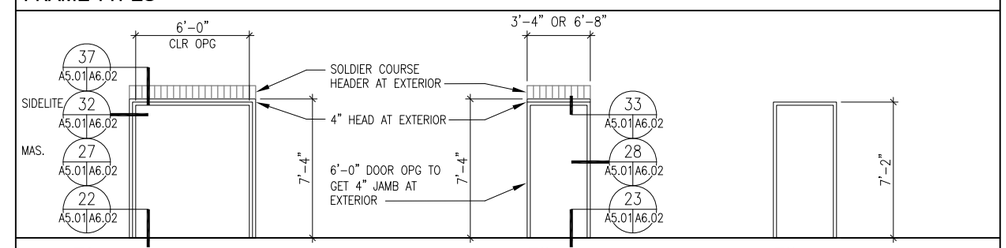

F1
MFR: KAWNEER
SERIES: 350 HEAVY WALL ENTRANCE
GAGE: SERIES STANDARD
INSULATED: YES AT EXTERIOR
THERMALLY BROKEN: YES AT EXTERIOR

F2
MFR: CECO DOOR
SERIES: THERMAL BREAK
GAGE: MATCH DOOR LEVEL
INSULATED: YES AT EXTERIOR
THERMALLY BROKEN: YES AT EXTERIOR

F3
MFR: CECO DOOR
SERIES: DRYWALL FRAME
GAGE: MATCH DOOR LEVEL
INSULATED: NO
THERMALLY BROKEN: NO

DOOR AND WINDOW NOTES

1. MANUFACTURERS AND/OR PRODUCTS LISTED WITHIN SPECIFICATIONS OR DRAWINGS ARE TO BE USED AS "BASIS OF DESIGN" METHOD. ALTERNATIVE MANUFACTURER'S PRODUCTS ARE ACCEPTABLE, PROVIDED ALTERNATE PRODUCT MEETS OR EXCEEDS PERFORMANCE REQUIREMENTS AS STATED IN SPECIFICATIONS, NOTATIONS WITHIN DRAWINGS OR PUBLISHED PERFORMANCE CHARACTERISTICS OF LISTED PRODUCTS. COMPARABLE PERFORMANCE CAN BE DEMONSTRATED BY COMPARABLE WARRANTIES, MEETING INDUSTRY STANDARD SPECIFICATIONS OR GOVERNING BODY TESTING METHODS, CERTIFICATION BY INDEPENDENT TESTING LAB, OR BY SUBMITTAL OF PRODUCT DATA THAT VERIFIES COMPLIANCE WITH PERFORMANCE REQUIREMENTS.
2. REFER TO SHT. A5.03 FINISH PLAN FOR DOOR, DOOR FRAME & WINDOW FRAME COLORS.
3. ALL DOORS U.N.O. AT TO HAVE ADA/ABA APPROVED LEVER HANDLE LOCKSETS.

NOT FOR CONSTRUCTION
BACKCHECK

US ARMY CORPS OF ENGINEERS
ALASKA DISTRICT

CONTRACT NO. _____
CONTRACTOR _____
CITY _____ STATE _____
PRIME CONTRACTOR Recommended: _____
RESIDENT ENGINEER Approved: _____ Date: _____

Symb	Action	Description	Date	Appvd

U.S. ARMY ENGINEER DISTRICT
CORPS OF ENGINEERS
ANCHORAGE, ALASKA

Designed: RWK
Drawn: RWK
Reviewed: Robert Clayton
Chief – Section
Submitted: D. Frenier
Date: 16 JULY 2009
Dwg Scale: AS NOTED
Plot Scale: 1:2
Plot: FTW336A-033-A5-01
Drawing #: F-211-13-01

CONTRACT NO. W911KB-09-R-0007
INV. NO. FTW336A
PN 65076

FT. WAINWRIGHT, ALASKA
AIRCRAFT PARTS STORAGE
ARCHITECTURAL
SCHEDULES & INTERIORS
DOOR & WINDOW SCHEDULES

Reference number: A5.01
Sheet 33 of 118

Drawing x:\UNIFIED\EN-TE\Jobs\FTW336A\Dwgs\FTW336A-033-A5-01.dwg last saved on 7/14/2009 4:18 PM was plotted by Curfew, Donald L POA on 7/17/2009 6:38 AM

ROOM FINISH SCHEDULE:

ROOM NO	ROOM NAME	FLOOR FINISH	BASE SUBST	BASE FINISH	WALLS NORTH WALL SUBST	NORTH WALL FINISH	EAST WALL SUBST	EAST WALL FINISH	SOUTH WALL SUBST	SOUTH WALL FINISH	WEST WALL SUBST	WEST WALL FINISH	CEILING SUBST	CEILING FINISH	CEILING HEIGHT	COMMENTS
101	MAIN ENTRY	WM-1	GWB	RB-1	GWB	PT-2	GWB	PT-2	GWB	PT-2	GWB	PT-2	GWB	PT-1	+10'-0"	
102	LOBBY	VCT-1/2	GWB	RB-1	GWB	PT-2	GWB	PT-1/PT-2	GWB	PT-1	GWB	PT-1	N/A	SAT-1	+10'-0"	
103	STOCK CONTROL OFFICE	VCT-1	GWB	RB-1	GWB	PT-1	GWB	PT-1	GWB	PT-1	GWB	PT-1	N/A	SAT-1	+9'-0"	
104	CORRIDOR	VCT-1/2	GWB	RB-1	GWB	PT-1	GWB	PT-1	GWB	PT-1	GWB	PT-1	N/A	SAT-1	+9'-0"	
105	CORRIDOR	VCT-1/2	GWB	RB-1	GWB	PT-1	GWB	PT-1	GWB	PT-1	GWB	PT-1	N/A	SAT-1	+9'-0"	
106	CHIEF'S OFFICE	VCT-1	GWB	RB-1	GWB	PT-1	GWB	PT-1	GWB	PT-1	GWB	PT-1	N/A	SAT-1	+9'-0"	
107	DEPUTY'S OFFICE	VCT-1	GWB	RB-1	GWB	PT-1	GWB	PT-1	GWB	PT-1	GWB	PT-1	N/A	SAT-1	+9'-0"	
108	UNASSIGNED OFFICE	VCT-1	GWB	RB-1	GWB	PT-1	GWB	PT-1	GWB	PT-1	GWB	PT-1	N/A	SAT-1	+9'-0"	
109	RECEIVING OFFICE	VCT-1	GWB	RB-1	GWB	PT-1	GWB	PT-1	GWB	PT-1	GWB	PT-1	N/A	SAT-1	+9'-0"	
110	SECURED STOCK OFFICE	VCT-1	GWB	RB-1	GWB	PT-1	GWB	PT-1	GWB	PT-1	GWB	PT-1	N/A	SAT-1	+9'-0"	
111	SHIPPING & TURN-INS OFFICE	VCT-1	GWB	RB-1	GWB	PT-1	GWB	PT-1	GWB	PT-1	GWB	PT-1	N/A	SAT-1	+9'-0"	
112	EXIT VESTIBULE	WM-1	GWB	RB-1	GWB	PT-2	GWB	PT-2	GWB	PT-2	GWB	PT-2	GWB	PT-1	+8'-0"	
113	ELECTRICAL	SC-1	GWB	RB-1	GWB	PT-1	GWB	PT-1	GWB	PT-1	GWB	PT-1	EXPOSED	N/A	N/A	
114	FEMALE LATRINE	CT-1,2&3	CBB	CT-1,2&3	CBB	CT-1,2&3	CBB	CT-1,2&3	CBB	CT-1,2&3	CBB	CT-1,2&3	GWB	PT-2	+9'-0"	CT WAINSCOT FULL HEIGHT, REFER TO DETAILS FOR TILE PATTERNS
115	MALE LATRINE	CT-1,2&3	CBB	CT-1,2&3	CBB	CT-1,2&3	CBB	CT-1,2&3	CBB	CT-1,2&3	CBB	CT-1,2&3	GWB	PT-2	+9'-0"	CT WAINSCOT FULL HEIGHT, REFER TO DETAILS FOR TILE PATTERNS
116	CORRIDOR/ BREAKROOM	VCT-1/2	GWB	RB-1	GWB	PT-1	GWB	PT-1	GWB	PT-1	GWB	PT-1	N/A	SAT-1	+9'-0"	
117	JANITOR'S CLOSET	VCT-1	GWB	RB-1	GWB	PT-1	GWB	PT-1	GWB	PT-1	GWB	PT-1	N/A	SAT-2	+9'-0"	
118	COMMUNICATIONS	SDT-1	GWB	RB-1	PLYWD/GWB	PT-4/PT-1	PLYWD/GWB	PT-4/PT-1	GWB	PT-1	PLYWD/GWB	PT-4/PT-1	GWB	PT-1	+10'-0"	PLYWD/GWB INDICATES PLYWOOD WAINSCOT TO +8'-0" W/ GWB FROM +8'-0" TO CEILING
119	COPY/ STORAGE	VCT-1	GWB	RB-1	GWB	PT-2	GWB	PT-1	GWB	PT-1	GWB	PT-1	N/A	SAT-1	+9'-0"	
120	GENERAL STORAGE	SC-1	PLYWD	RB-1	PLYWD/FRRVR	PT-4	PLYWD/FRRVR	PT-4	PLYWD	PT-4	PLYWD/FRRVR	PT-4	EXPOSED	PT-1	N/A	PLYWD/ FRRVR INDICATES PLYWOOD WAINSCOT TO +12'-0" W/ EXPOSED V.R. FROM +12'-0" TO ROOF DECK ABOVE AT EXT. WALL
121	SECURED STORAGE	SC-1	GWB	RB-1	GWB	PT-1	GWB	PT-1	GWB	PT-1	GWB	PT-1	GWB	PT-1	+11'-4"	
122	RECEIVING STORAGE	SC-1	GWB/MWP	RB-1/MWP-1	MWP	MWP-1	MWP	MWP-1	PLYWD	PT-4	PLYWD	PT-4	EXPOSED	N/A	N/A	PLYWOOD WAINSCOT TO +12'-0" W/ EXPOSED V.R. FROM +12'-0" TO ROOF DECK ABOVE AT EXT. WALL
123	EXIT VESTIBULE	WM-1	GWB	RB-1	GWB	PT-2	GWB	PT-2	GWB	PT-2	GWB	PT-2	GWB	PT-1	+8'-0"	
124	EXIT VESTIBULE	WM-1	GWB	RB-1	GWB	PT-2	GWB	PT-2	GWB	PT-2	GWB	PT-2	GWB	PT-1	+8'-0"	
125	PARTS RETURN STORAGE	SC-1	PLYWD/MWP	RB-1/MWP-1	PLYWD/MWP	PT-4/MWP-1	PLYWD/FRRVR	PT-4	MWP	MWP-1	MWP	MWP-1	EXPOSED	PT-1	N/A	PLYWOOD WAINSCOT TO +12'-0" W/ EXPOSED V.R. FROM +12'-0" TO ROOF DECK ABOVE AT EXT. WALL
126	MECHANICAL	SC-1	CMU/PLYWD	RB-1	CMU/GWB	PT-1	PLYWD/FRRVR	PT-4	CMU/GWB	PT-1	CMU/GWB	PT-1	EXPOSED	PT-1	N/A	PLYWOOD WAINSCOT TO +12'-0" W/ EXPOSED V.R. FROM +12'-0" TO ROOF DECK ABOVE AT EXT. WALL
127	FIRE PUMPS	SC-1	CMU/PLYWD	RB-1	CMU	PT-1	PLYWD/FRRVR	PT-4	CMU	PT-1	CMU	PT-1	EXPOSED	PT-1	+12'-3 1/2"	PLYWOOD WAINSCOT TO +12'-0" W/ EXPOSED V.R. FROM +12'-0" TO ROOF DECK ABOVE AT EXT. WALL

FINISH MATERIALS:

FLOORING, TILE & WALL BASE:

CERAMIC TILE:

CT-1 (FIELD & ACCENT TILE - WALL):
MFR: DALTILE
STYLE: KEYSTONES
SIZE: 2"X2"
COLOR: D037 PEPPER WHITE
NOTES:

CT-2 (FIELD TILE - FLOOR & WALL):
MFR: DALTILE
STYLE: KEYSTONES
SIZE: 2"X2"
COLOR: D203 FIRE BRICK SPECKLE
NOTES: WITH ABRASIVE CONTENT

CT-3 (FIELD & ACCENT TILE - WALL):
MFR: DALTILE
STYLE: KEYSTONES
SIZE: 2"X2"
COLOR: D175 ELEMENTAL TAN SPECKLE
NOTES:

CT-4 (ACCENT TILE - FLOOR):
MFR: DALTILE
STYLE: KEYSTONES
SIZE: 2"X2"
COLOR: D007 CINNAMON RANGE
NOTES: WITH ABRASIVE CONTENT

GROUT:
MFR: DALTILE
STYLE: N/A
SIZE: N/A
COLOR: 319 CARMEL (FOR BIDDING PURPOSES ONLY)
NOTES: FINAL GROUT COLOR TO BE SELECTED FROM MANUFACTURER'S STANDARD RANGE OF COLORS WITHIN SAME PRICE CATEGORY

SEALED CONCRETE:

SC-1:
MFR: EDIT
STYLE: EDIT
SIZE: EDIT
COLOR: EDIT
NOTES: EDIT

WALK-OFF MATS:

WM-1:
MFR: CONSTRUCTION SPECIALTIES, INC.
STYLE: PEDIMAT M1
SIZE: PER PLANS
COLOR: ARCH'T TO SELECT FROM MFR'S STD. COLORS
NOTES: RECESSED INSTALLATION

RUBBER WALL BASE:

RB-1:
MFR: ROPPE
STYLE: PINNACLE
SIZE: 6"
COLOR: BRICK 188
NOTES:

VINYL COMPOSITION TILE:

VCT-1: (FIELD)
MFR: MANNINGTON COMMERCIAL
STYLE: SOLIDPOINT
SIZE: 12"X12"
COLOR: ITALIAN STRAW 363
NOTES:

VCT-2: (ACCENT)
MFR: MANNINGTON COMMERCIAL
STYLE: COLORPOINT
SIZE: 12"X12"
COLOR: CHERRYWOOD 338
NOTES:

STATIC DISSIPATIVE TILE FLOORING:

SDT-1:
MFR: ROPPE
STYLE: ESD
SIZE: 12"X12"
COLOR: #754 STORM BEIGE
NOTES: COOR. COPPER FOIL UNDERLAYMENT W/ BUILDING GROUNDING SYSTEM.

COATINGS:

PAINTS:

PT-1:
MFR: SHERWIN-WILLIAMS
STYLE: GLOSS AT LATRINES, SEMI-GLOSS AT ALL OTHER LOCATIONS
SIZE: N/A
COLOR: DECOR WHITE SW 1361
NOTES:

PT-2:
MFR: SHERWIN-WILLIAMS
STYLE: GLOSS AT LATRINES, SEMI-GLOSS AT ALL OTHER LOCATIONS
SIZE: N/A
COLOR: GOLD STRAND SW 1400
NOTES:

PT-3:
MFR: N/A
STYLE: SEMI-GLOSS
SIZE: N/A
COLOR: INT'L SAFETY YELLOW
NOTES:

PT-4: (WOOD SUBSTRATES ONLY)
MFR: N/A
STYLE: SEMI-GLOSS
SIZE: N/A
COLOR: INT'L SAFETY YELLOW
NOTES: AT PLYWOOD WAINSCOT, PROVIDE INTUMESCENT PAINT ADDITIVE EQUIVALENT TO FLAME STOP, INC. BRAND FLAME STOP III FOR CLASS A RATING.

PT-5: (DOOR & WINDOW FRAMES)
MFR: MATCH KAWNEER
STYLE: FLUROPAN 70% PVDF
SIZE: N/A
COLOR: REDWOOD
NOTES:

STAINS:

ST-1:
MFR: NOT SPECIFIED
STYLE: N/A
SIZE: N/A
COLOR: ARCHITECT TO SELECT FROM MFR'S STD. RANGE
NOTES: PROVIDE SAMPLES REPRESENTATIVE OF MFR'S STANDARD COLORS AS APPLIED TO ACTUAL WOOD SPECIES CHOSEN FOR DOORS

CEILINGS:

SUSPENDED G.W.B. CEILINGS:

G.W.B. SUSPENSION SYSTEM (GWB BY G.C.):
MFR: ARMSTRONG COMMERCIAL CEILINGS
STYLE: SHORTSPAN OR QUIKSTIX DRYWALL SYSTEMS
SIZE: PER MFR'S RECOMMENDATIONS
COLOR: NOT SPECIFIED
NOTES: PROVIDE CODE COMPLIANT SEISMIC BRACING (WALL ANGLES, WIRE SIZE & SPACING & COMPRESSION STRUTS) PER SEISMIC ZONE INDICATED IN STR'L DWGS.

SUSPENDED ACOUSTICAL CEILINGS:

SAT-1:
MFR: ARMSTRONG COMMERCIAL CEILINGS
PANELS: FINE FISSURED SECOND LOOK II ANGULAR TEGULAR #1861 CENTER SCORED
GRID: PRELUDE XL 15/16"
SIZE: 24"X48"
COLOR: WHITE
NOTES: PROVIDE CODE COMPLIANT SEISMIC BRACING (WALL ANGLES, WIRE SIZE & SPACING & COMPRESSION STRUTS) PER SEISMIC ZONE INDICATED IN STR'L DWGS.

EXTERIOR:

STANDING SEAM METAL ROOFING:

SSR-1:
MFR: AEP SPAN
STYLE: CAP SEAM
SIZE: 20"
COLOR: COLONIAL RED
NOTES: ACTUAL PRODUCT SELECTION TO MEET LEED MIN. SRI OF 29 FOR ROOF SLOPES GREATER THAN 2:12 PER ASTM E 1980-01

SOFFIT PANELS

SOP-1:
MFR: AEP SPAN
STYLE: FLUSH PANEL, SOLID
SIZE: 12"
COLOR: PARCHMENT
NOTES: INSTALLED AT MAIN ROOF EAVES

SOP-2:
MFR: AEP SPAN
STYLE: FLUSH PANEL, VENTED
SIZE: 12"
COLOR: PARCHMENT
NOTES: INSTALLED AT DORMER ROOF GABLES

EXT. INSULATED FINISH SYSTEM (EIFS):

EIFS-1:
MFR: DRYVIT
STYLE: OUTSULATION MD
SIZE: 4" NOM. THK.
COLOR: CARIBOU 339A W/ SANDBLAST FINISH
NOTES: AIR BARRIER, INSUL BD & SAM FLASHING PER MFR

MASONRY WAINSCOT:

MAS-1: (PREFERED)
MFR: MODERRA MORTAR-LESS MASONRY
STYLE: SINGLE SCORED, VERT. INSTALL.
SIZE: 8" BLOCK
COLOR: BROWN
NOTES: PROVIDE CORNER RETURNS AT ALL DOOR & WINDOW OPENINGS.

MAS-1: (OPTIONAL)
MFR: ANCHORAGE SAND & GRAVEL
STYLE: SPLIT-FACED, DRY-BLOCK
SIZE: 4X8X16
COLOR: AURORA RED (INTEGRAL COLOR)
NOTES: PROVIDE CORNER RETURNS AT ALL DOOR & WINDOW OPENINGS.

MISC.:

SOLID SURFACE:

SS-1:
MFR: LG
STYLE: HI-MACS
SIZE: PER PLANS
COLOR: SIENNA QUARTZ G72
NOTES: ALL BUILT-IN COUNTERTOPS & WINDOW SILLS

PLASTIC LAMINATE:

PLAM-1:
MFR: WILSONART LAMINATE
STYLE: EDIT
SIZE: PER PLANS
COLOR: SHADOW D96-60
NOTES: ALL BUILT-IN BASE & UPPER CABINETS

METAL (WIRE) WALL PANEL:

MWP-1:
MFR: FOLDING GUARD
STYLE: KWIK-FENCE, WELDED WIRE
SIZE: 10' OVERALL HGT.
COLOR: MFR'S GALV. STEEL FINISH
NOTES:

VERTICAL PERIMETER INSULATION:

(NOT DESIGNATED)
MFR: NOT SPECIFIED
STYLE: XPS, PRE-FINISHED W/ CEMENTITIOUS PROTECTION COATING AT EXT FACE
SIZE: 4" THK X MFR'S NOM. PANEL SIZE
COLOR: MATCH EIFS
NOTES: PAINTING ONLY REQUIRED FOR SURFACES LEFT EXPOSED TO VIEW FOLLOWING FINAL GRADING & PAVING

STRUCTURAL INSUL. PANELS (SIPS):

(NOT DESIGNATED)
MFR: INSULSPAN, INC.
STYLE: N/A
SIZE: 12-1/4" THK X MFR'S NOM. PANEL SIZE
COLOR: N/A
NOTES:

EQUIPMENT:

DOCK LIFTS:

REFER TO SHT. A1.01:
MFR: ADVANCE LIFTS, INC.
STYLE: 4480
SIZE: 96"X144"
CAPACITY: 20,000# (16,000# AXLE CAP. AT ENDS, 14,000# AXLE CAP. AT SIDES)
INSTALLATION: PIT MOUNTED
COLOR: SELECTED BY ARCHITECT FROM MFR STD. COLORS
NOTES:

REFRIGERATOR: (GOVT SUPPLIED, CONTR. INSTA

REFER TO ELEV. 1A/A5.01:
MFR: NOT SPECIFIED
STYLE: TOP MTD. FREEZER
SIZE: 62"HX28"WX30"D
CAPACITY: 15.7 C.F.
INSTALLATION: FREE STANDING
COLOR: SELECTED BY ARCHITECT FROM MFR STD. COLORS
NOTES:

ABBREVIATIONS:

CBB	CEMENT BACKER BOARD	RB	RUBBER BASE
CPT	CARPET	RT	RUBBER TILE
CT	CERAMIC TILE	SAT	SUSPENDED ACOUSTICAL TILE
EP	EPOXY PAINT	SC	SEALED CONCRETE
GWB	GYPSUM WALL BOARD	SP	SOLID POLYMER
QT	QUARRY TILE	SS	SOLID SURFACE
QTB	QUARRY TILE BASE	SSR	STANDING SEAM ROOFING
MWP	MESH (WIRE) WALL PANEL	ST	STAIN FINISH (WOOD)
PLAM	PLASTIC LAMINATE	VCT	VINYL COMPOSITION TILE
PLYWD	PLYWOOD	WM	WALK-OFF MAT
PT	PAINT		

NOTES:

1. MANUFACTURERS AND/OR PRODUCTS LISTED WITHIN SPECIFICATIONS OR DRAWINGS ARE TO BE USED AS "BASIS OF DESIGN" METHOD. ALTERNATIVE MANUFACTURER'S PRODUCTS ARE ACCEPTABLE, PROVIDED ALTERNATE PRODUCT MEETS OR EXCEEDS PERFORMANCE REQUIREMENTS AS STATED IN SPECIFICATIONS, NOTATIONS WITHIN DRAWINGS OR PUBLISHED PERFORMANCE CHARACTERISTICS OF LISTED PRODUCTS. COMPARABLE PERFORMANCE CAN BE DEMONSTRATED BY COMPARABLE WARRANTIES, MEETING INDUSTRY STANDARD SPECIFICATIONS OR GOVERNING BODY TESTING METHODS, CERTIFICATION BY INDEPENDENT TESTING LAB, OR BY SUBMITTAL OF PRODUCT DATA THAT VERIFIES COMPLIANCE WITH PERFORMANCE REQUIREMENTS.
2. REFER TO FLOOR PLAN & WALL TYPES SCHEDULE FOR SPECIFIC WALL SUBSTRATES.
3. REFER TO SHT. A5.03 FINISH PLAN FOR COLORS NOT SPECIFIED HERE.

NOT FOR CONSTRUCTION
BACKCHECK

US ARMY CORPS OF ENGINEERS
ALASKA DISTRICT

CONTRACT NO. _____
CONTRACTOR _____
CITY _____ STATE _____
PRIME CONTRACTOR _____
Recommended: _____
RESIDENT ENGINEER _____
Approved: _____
Date: _____

Symb	Action	Description	Date	Appvd

U.S. ARMY ENGINEER DISTRICT, ALASKA
CORPS OF ENGINEERS
ANCHORAGE, ALASKA

Designed: RWK
Drawn: RWK
Reviewed: Robert Clayton
Chief - - GPGA-Tech-Eng - Section
Submitted: D. Foehner
Chief - - GPGA-Div - - Branch
Date: 16 JULY 2009
Dwg Scale: AS NOTED
Plot Scale: 1:2
File: FTW336A-034-A5-02
Drawing N: F-211-13-01

INV. NO. W911KB-09-R-0007
PN 65076
FTW336A

FT. WAINWRIGHT, ALASKA
AIRCRAFT PARTS STORAGE
ARCHITECTURAL
SCHEDULES & INTERIORS
FINISHES, MATERIALS & EQUIPMENT SCHEDULES

Reference number:
A5.02

Drawing x:\UNIFIED\EN-TE\Jobs\FTW336A\Dwgs\FTW336A-034-A5-02.dwg last saved on 7/14/2009 5:46 PM was plotted by Curfew, Donald L POA on 7/17/2009 6:38 AM

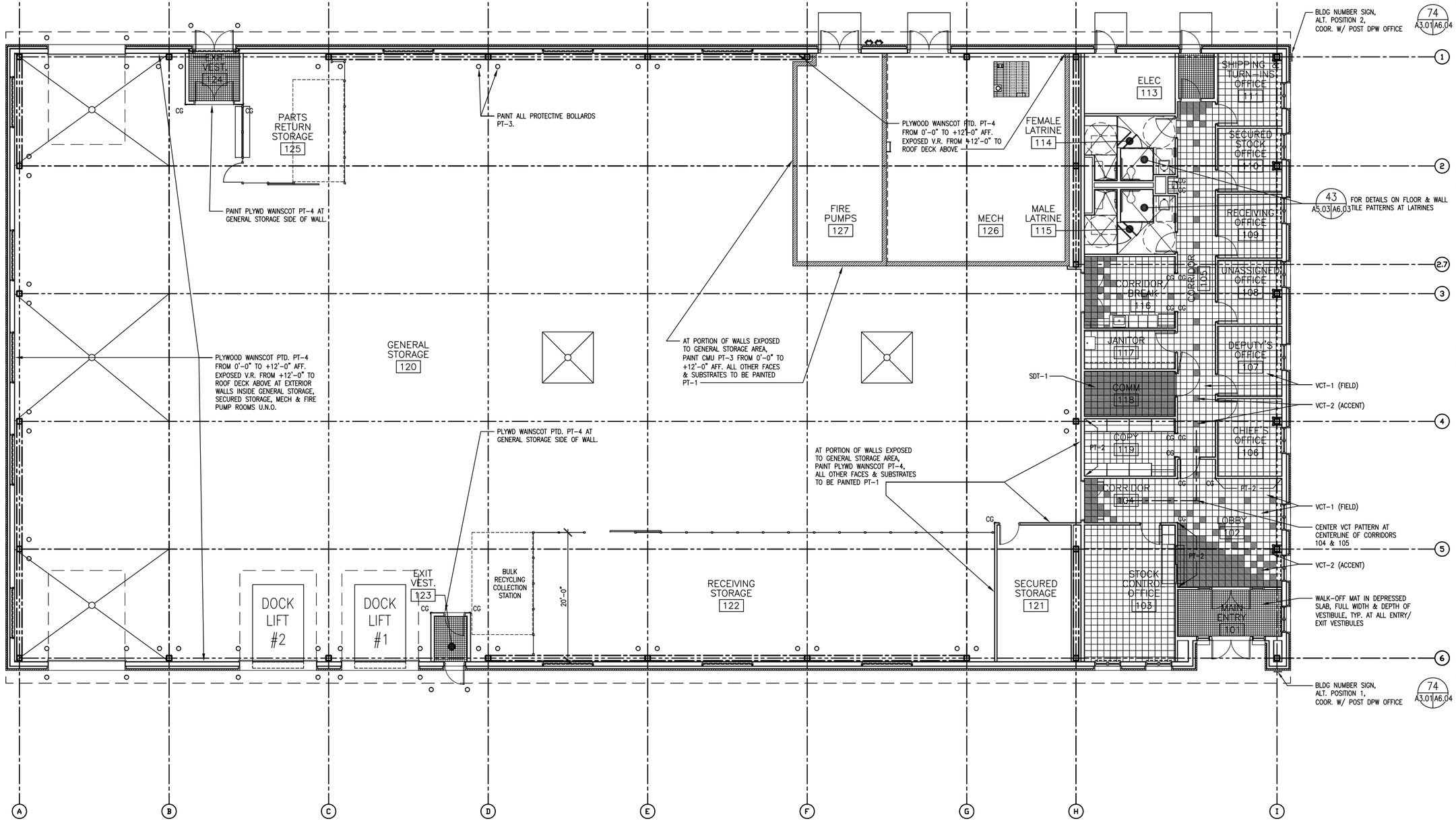

1 A5.02 A5.03 ROOM FINISH PLAN

SCALE: 1/8"=1'-0"

0 5' 10'

TRUE NORTH PLAN NORTH

NOTE:

1. PROVIDE SURFACE MOUNT RESILIENT CORNER GUARDS ON OUTSIDE WALL CORNERS AT CORRIDORS.
2. EXTEND CORNER GUARDS FROM TOP OF BASE TO FINISH CEILING.
3. STRL. STL. COLUMNS, BEAMS, BRACING, ROOF TRUSSES & UNDERSIDE OF ROOF DECK TO BE PAINTED PT-1.
4. ALL WALLS & GWB CEILINGS TO BE PAINTED PER FINISH SCHEDULE U.N.O. HERE.
5. ALL EXT. & VESTIBULE PERSONNEL DOORS & FRAMES TO BE PAINTED PT-5.
6. ALL OVHD DOORS TO BE PAINTED PT-5.
7. ALL INT. WD. DOORS TO BE STAINED ST-1 & FRAMES TO BE PAINTED PT-1.
8. ALL INT. MTL. DOORS & FRAMES TO BE PAINTED PT-1.
9. ALL EXT. & VESTIBULE GLAZING FRAMES & MUTINS TO BE PAINTED PT-5.
10. ALL INT. GLAZING FRAMES TO BE PAINTED PT-1.
11. ALL EXTERIOR WINDOWS IN OFFICES, LOBBY & MAIN ENTRY TO HAVE MINI-BLINDS, FULL HGT. & WIDTH OF WINDOW OPENING. LOCATION IDENTIFIED BY ▪▪▪▪▪▪▪▪▪▪▪

NOT FOR CONSTRUCTION

BACKCHECK

US ARMY CORPS OF ENGINEERS
ALASKA DISTRICT

CONTRACT NO.
CONTRACTOR
CITY STATE
PRIME CONTRACTOR Recommended:
RESIDENT ENGINEER Approved:
Date:

Symb.	Action	Description	Date	Appvd

U.S. ARMY ENGINEER DISTRICT
CORPS OF ENGINEERS
ANCHORAGE, ALASKA

Designed: RWK
Drawn: RWK
Reviewed: Robert Clayton
Chief - Section
Submitted: D. Frenier
Chief - Section
Date: 16 JULY 2009
Dwg Scale: AS NOTED
Plot Scale: 1:2
File: FTW336A-035-A5-03
Drawing #: F-211-13-01

INV. NO. W911KB-09-R-0007
PN 65076 FTW336A

FT. WAINWRIGHT, ALASKA
AIRCRAFT PARTS STORAGE
ARCHITECTURAL
SCHEDULES & INTERIORS
ROOM FINISH PLAN

Reference number:
A5.03

Drawing x:\UNIFIED\EN-TE\Jobs\FTW336A\Dwgs\FTW336A-035-A5-03.dwg last saved on 7/7/2009 10:37 AM was plotted by Curfew, Donald L POA on 7/17/2009 6:38 AM

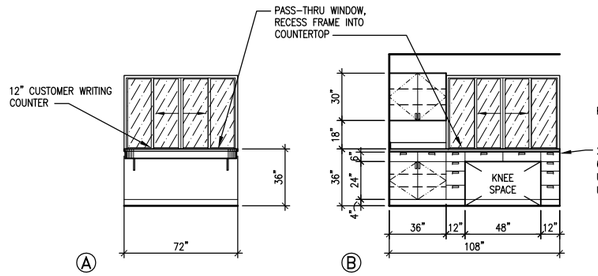

1 A1.02 A5.04 LOBBY WINDOW – ROOM 103

SCALE: 1/4"=1'-0"

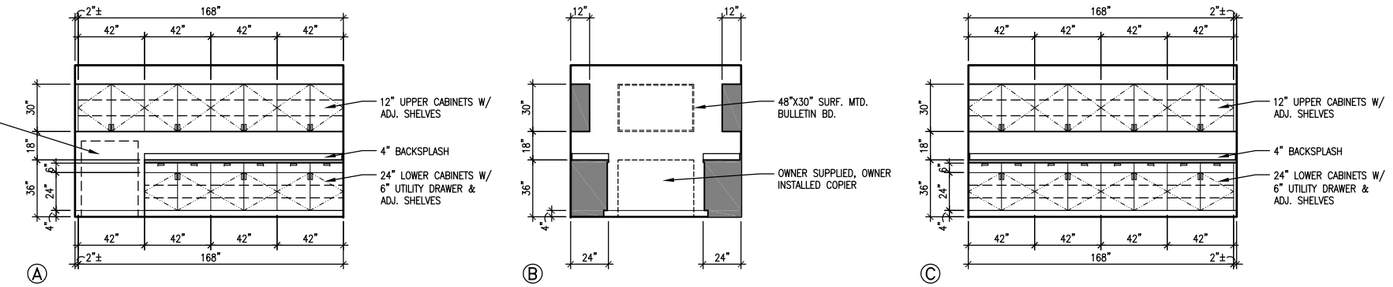

2 A1.02 A5.04 COPY – ROOM 119

SCALE: 1/4"=1'-0"

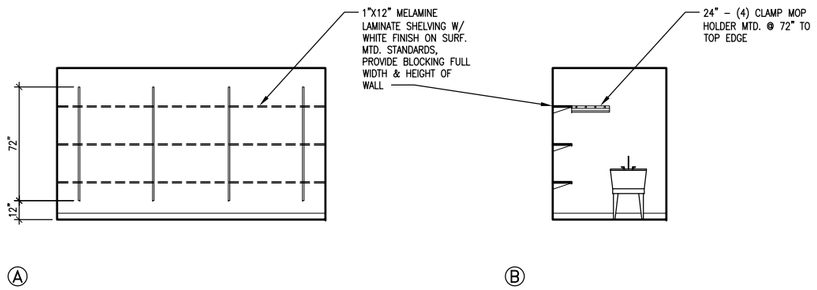

3 A1.02 A5.04 JANITOR'S CLOSET – ROOM 117

SCALE: 1/4"=1'-0"

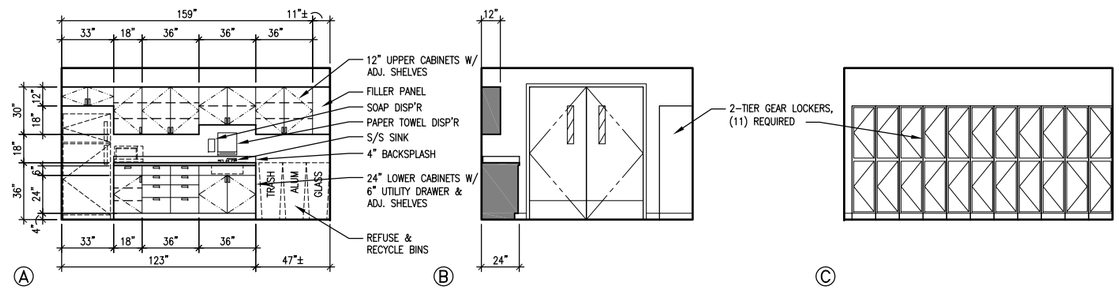

4 A1.02 A5.04 CORRIDOR/ BREAKROOM – ROOM 116

SCALE: 1/4"=1'-0"

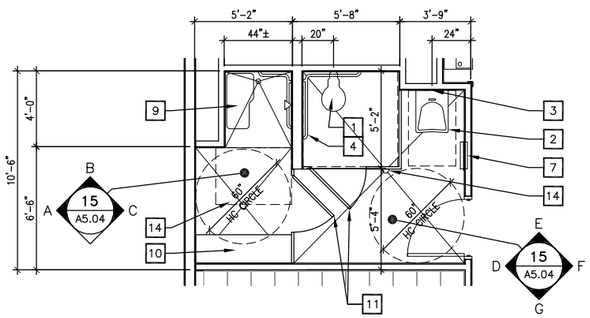

5 A1.02 A5.04 MALE LATRINE – ROOM 115 FEMALE LATRINE ROOM 114 SIMILAR, OPPOSITE HAND

SCALE: 1/4"=1'-0"

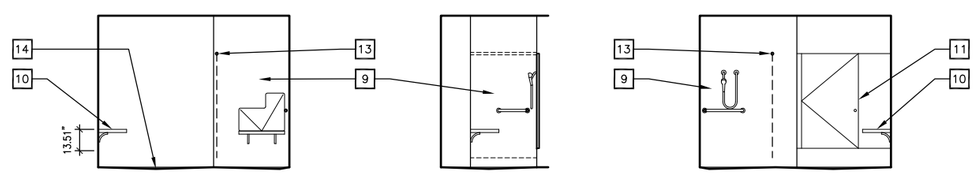

Ⓐ SHOWER – NORTH

Ⓑ SHOWER – EAST

Ⓒ SHOWER – SOUTH

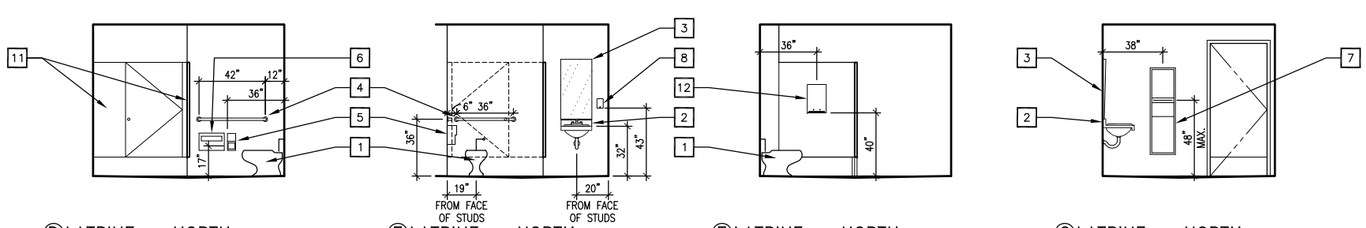

Ⓓ LATRINE – NORTH

Ⓔ LATRINE – NORTH

Ⓕ LATRINE – NORTH

Ⓖ LATRINE – NORTH

5 A5.04 A5.04 MALE LATRINE – ROOM 115

SCALE: 1/4"=1'-0"

#	TOILET KEYNOTES		
	DESCRIPTION		DESCRIPTION
1.	ADA APPROVED WATER CLOSET–SEAT MTD. @ +17"–19" A.F.F (RE. PLUMBING PLANS)		
2.	ADA APPROVED WALL LAVATORY–INSULATE PIPES. (RE: PLUMBING PLANS)		
3.	ADA APPROVED TILT MIRROR, 24"X36"		
4.	ADA APPROVED GRAB BARS., 36" & 42" PROVIDE WOOD BLOCKING AS REQUIRED FOR INSTALLATION		
5.	ADA APPROVED TOILET TISSUE DISP'R, SURF. MTD. W/ S/S FINISH		
6.	ADA APPROVED SEAT COVER DISP'R, SURF. MTD. W/ S/S FINISH		
7.	ADA APPROVED PAPER TOWEL DISP'R/ WASTE RECEPTACLE, SEMI–RECESSED W/ S/S FINISH		
8.	ADA APPROVED ANTI–BACTERIAL SOAP DISP'R, SURF. MTD. W/ S/S FINISH		
9.	ADA APPROVED 36"X36" PRE–FAB ACRYLIC ROLL–IN SHOWER W/ WHITE FINISH		
10.	FIXED SOLID SURF. DRESSING BENCH		
11.	FLOOR MTD. SOLID PHENOLIC TOILET PARTITIONS W/ 36" WIDE DOOR		
12.	ADA APPROVED SANITARY NAPKIN/ TAMPON DISP'R, SURF. MTD. W/ S/S FINISH (FEMALE LATRINE ONLY)		
13.	CURTAIN ROD W/ S/S FINISH & VINYL CURTAIN W/ OPAQUE WHITE FINISH		
14.	SLOPE TO FLOOR DRAIN, TYP.		

NOT FOR CONSTRUCTION

BACKCHECK

US ARMY CORPS OF ENGINEERS
ALASKA DISTRICT

CONTRACT NO. _____
CONTRACTOR _____
CITY _____ STATE _____
PRIME CONTRACTOR Recommended: _____
RESIDENT ENGINEER Approved: _____ Date: _____

Symb	Action	Description	Date	Appvd

U.S. ARMY ENGINEER DISTRICT
CORPS OF ENGINEERS
ANCHORAGE, ALASKA

Designed: R.W.K.
Drawn: R.W.K.
Reviewed: Robert Clayton
Chief – Section
Submitted: D. Frenier
Chief – Section
Date: 16 JULY 2009
Dwg Scale: AS NOTED
Plot Scale: 1:2
File: FTW336A-036-A5-04
Drawing #: F-211-13-01

DACA-Contract Number
INV. NO. W911KB-09-R-0007
PN 65076 FTW336A

FT. WAINWRIGHT, ALASKA
AIRCRAFT PARTS STORAGE
ARCHITECTURAL

INTERIOR ELEVATIONS

Reference number:
A5.04

Drawing x:\UNIFIED\EN-TE\Jobs\FTW336A\Dwgs\FTW336A-036-A5-04.dwg last saved on 7/13/2009 9:11 AM was plotted by Curfew, Donald L POA on 7/17/2009 6:38 AM

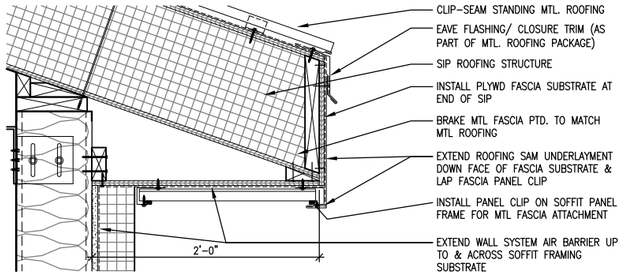

REFER TO OTHER FASCIA DETAILS FOR MORE NOTES/ MATERIALS

16 A1.04 A6.01 FASCIA AT MAIN ROOF EAVES
SCALE: 1-1/2"=1'-0"

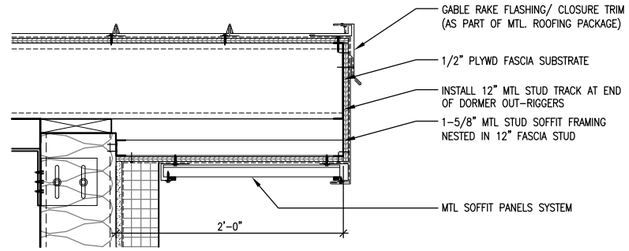

REFER TO OTHER FASCIA DETAILS FOR MORE NOTES/ MATERIALS

18 A1.04 A6.01 FASCIA AT DORMER GABLE RAKES
SCALE: 1-1/2"=1'-0"

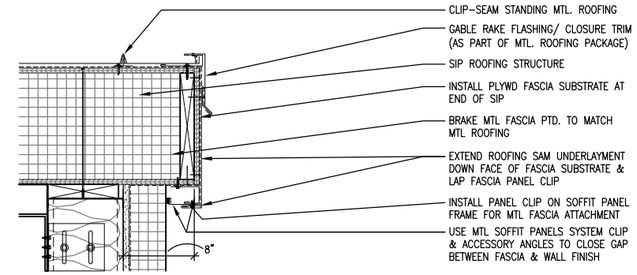

20 A1.04 A6.01 FASCIA AT MAIN ROOF GABLE RAKE
SCALE: 1-1/2"=1'-0"

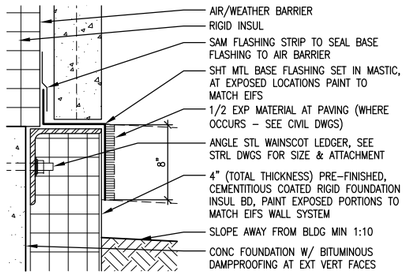

11 A4.03 A6.01 EXT WALL BASE
SCALE: 3"=1'-0"

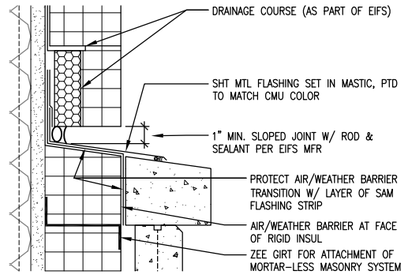

12 A4.03 A6.01 WATERTABLE COURSE
SCALE: 3"=1'-0"

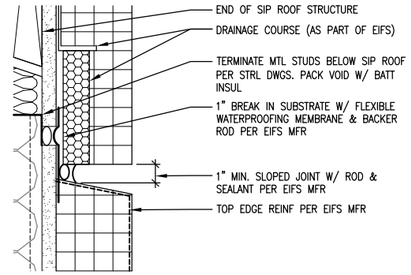

13 A4.03 A6.01 EXT WALL SLIP JOINT
SCALE: 3"=1'-0"

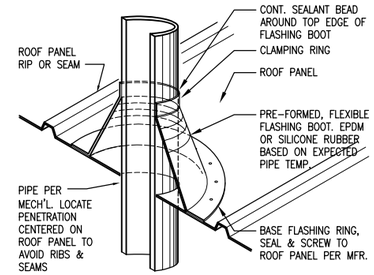

14 A1.04 A6.01 PIPE PENETRATION @ ROOF
SCALE: 1-1/2"=1'-0"

NOT USED

15 X A6.01 DETAIL
SCALE: 1-1/2"=1'-0"

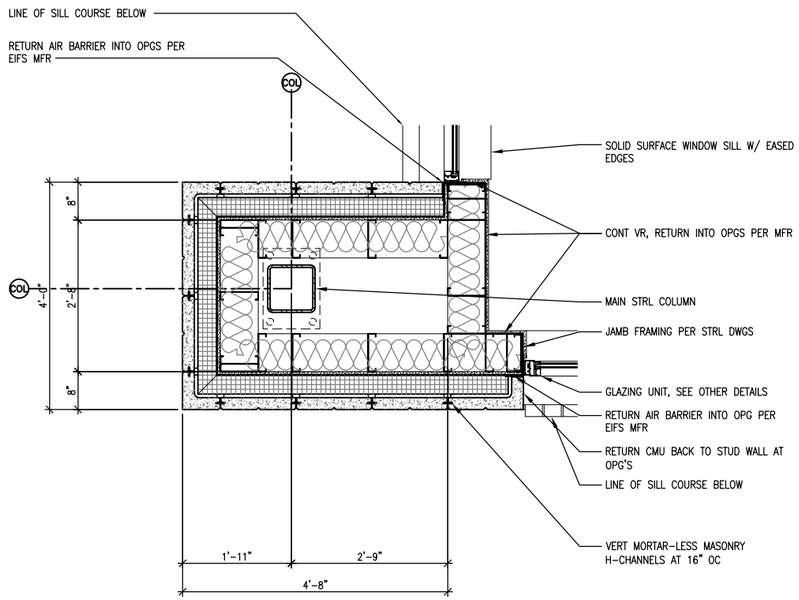

1 A1.02 A6.01 PLAN DETAIL AT ENTRY COLUMN
SCALE: 3/4"=1'-0"

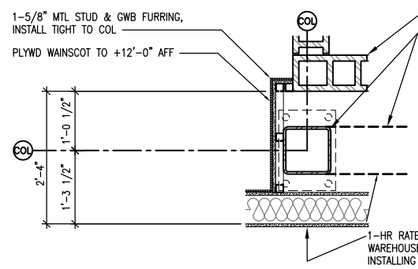

8 A1.02 A6.01 INT. COL. AT MECH'L
SCALE: 3/4"=1'-0"

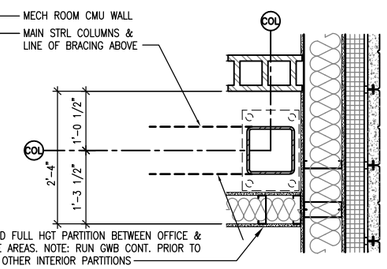

9 A1.02 A6.01 INT. COL. AT MECH'L
SCALE: 1-1/2"=1'-0"

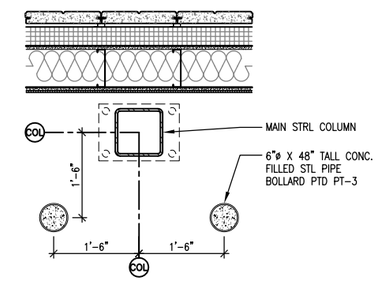

10 A1.01 A6.01 TYP. INT. BOLLARD LAYOUT
SCALE: 3/4"=1'-0"

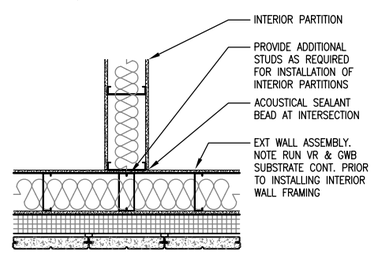

3 A1.02 A6.01 INT. WALL TO EXT. WALL
SCALE: 3/4"=1'-0"

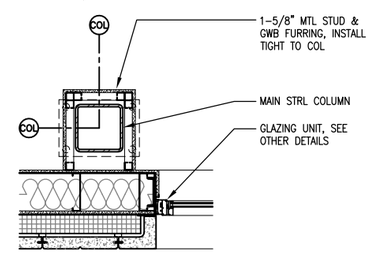

4 A1.02 A6.01 GABLE END COLUMN
SCALE: 3/4"=1'-0"

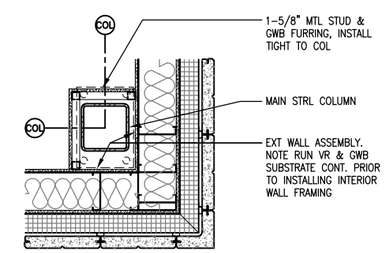

5 A6.01 A6.01 CORNER COLUMN
SCALE: 3/4"=1'-0"

NOT FOR CONSTRUCTION
BACKCHECK

US ARMY CORPS OF ENGINEERS
ALASKA DISTRICT

CONTRACT NO. ___
CONTRACTOR ___
CITY ___ STATE ___
PRIME CONTRACTOR ___
Recommended: ___
RESIDENT ENGINEER ___
Approved: ___
Date: ___

Num	Action	Description	Date	Appvd

U.S. ARMY ENGINEER DISTRICT
CORPS OF ENGINEERS
ANCHORAGE, ALASKA

Designed: RWK
Drawn: RWK
Reviewed: Robert Clayton
Chief ___ Section
Submitted: D. Frenier
Chief ___ Section
Date: 16 JULY 2009
Dwg Scale: AS NOTED
Plot Scale: 1:2
File: FTW336A_037_A6_01
Drawing #: F-211-13-01

PN 65076
INV. NO. W911KB-09-R-0007
FTW336A

FT. WAINWRIGHT, ALASKA
AIRCRAFT PARTS STORAGE
ARCHITECTURAL
DETAILS
DETAILS - BUILDING EXTERIOR

Reference number:
A6.01

Drawing x:\UNIFIED\EN-TE\Jobs\FTW336A\Dwgs\FTW336A-037-A6-01.dwg last saved on 7/13/2009 9:11 AM was plotted by Curfew, Donald L POA on 7/17/2009 6:39 AM

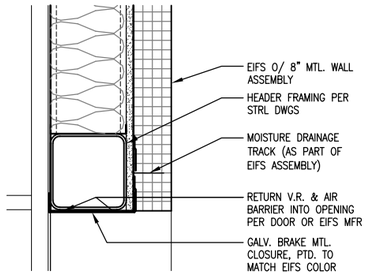

36 A5.01|A6.02 HEAD AT OVERHEAD DOOR
SCALE: 1-1/2"=1'-0"

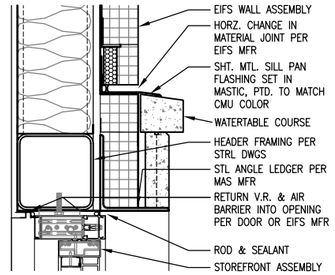

37 A5.01|A6.02 HEAD AT ENTRY DOOR
SCALE: 1-1/2"=1'-0"

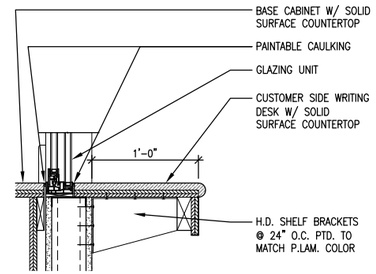

38 A5.01|A6.02 DETAIL
SCALE: 1-1/2"=1'-0"

NOT USED

39 X|A6.02 DETAIL
SCALE: 1-1/2"=1'-0"

NOT USED

40 X|A6.02 DETAIL
SCALE: 1-1/2"=1'-0"

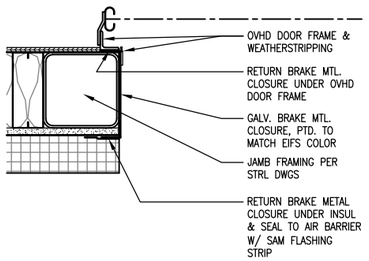

31 A5.01|A6.02 JAMB AT EIFS
SCALE: 1-1/2"=1'-0"

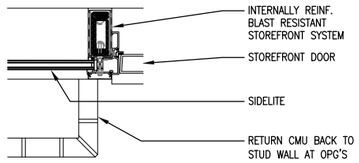

32 A5.01|A6.02 JAMB AT SIDELITE
SCALE: 1-1/2"=1'-0"

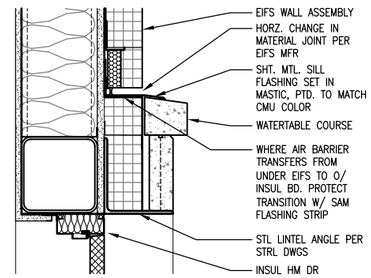

33 A5.01|A6.02 HEAD AT EXIT DOOR
SCALE: 1-1/2"=1'-0"

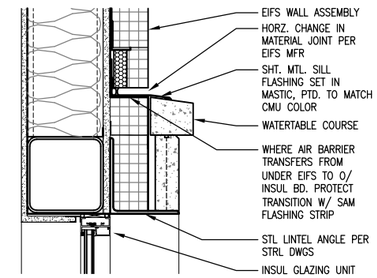

34 A5.01|A6.02 HEAD AT VISION GLAZING
SCALE: 1-1/2"=1'-0"

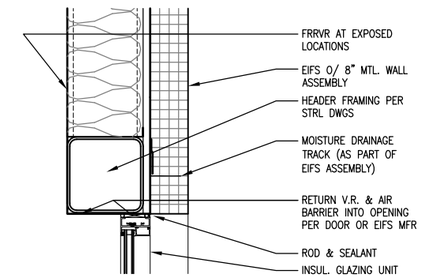

35 A5.01|A6.02 HEAD AT CLERESTORY
SCALE: 1-1/2"=1'-0"

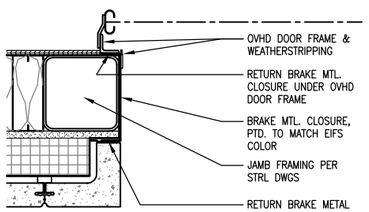

26 A5.01|A6.02 JAMB AT MASONRY
SCALE: 1-1/2"=1'-0"

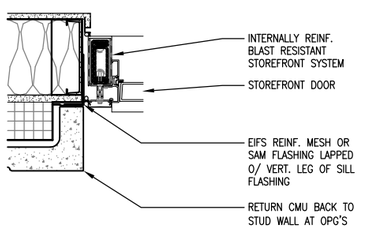

27 A5.01|A6.02 JAMB AT MASONRY
SCALE: 1-1/2"=1'-0"

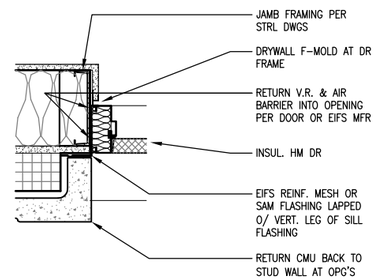

28 A5.01|A6.02 JAMB AT EXIT DOOR
SCALE: 1-1/2"=1'-0"

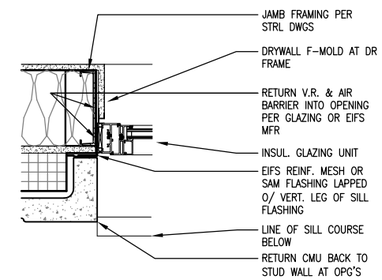

29 A5.01|A6.02 JAMB AT VISION GLAZING
SCALE: 1-1/2"=1'-0"

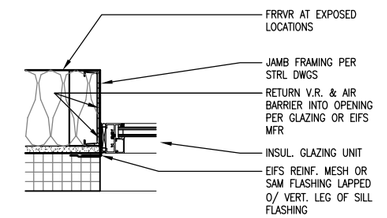

30 A5.01|A6.02 JAMB AT CLERESTORY
SCALE: 1-1/2"=1'-0"

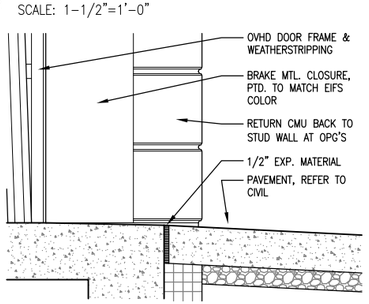

21 A5.01|A6.02 THRESHOLD AT OVERHEAD DR.
SCALE: 1-1/2"=1'-0"

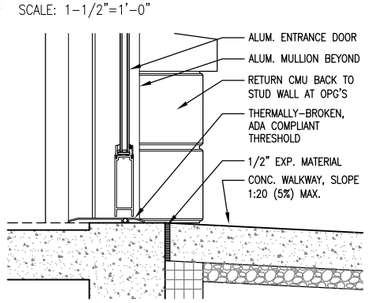

22 A5.01|A6.02 THRESHOLD AT ENTRY DOOR
SCALE: 1-1/2"=1'-0"

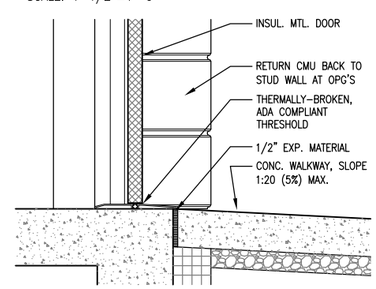

23 A5.01|A6.02 THRESHOLD AT EXIT DOOR
SCALE: 1-1/2"=1'-0"

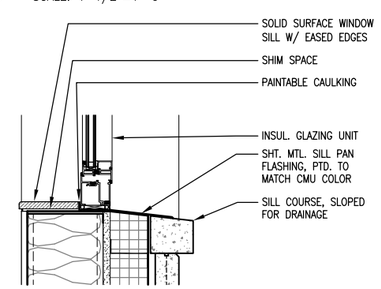

24 A5.01|A6.02 SILL AT VISION GLAZING
SCALE: 1-1/2"=1'-0"

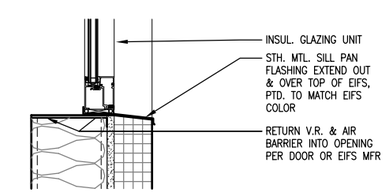

25 A5.01|A6.02 SILL AT CLERESTORY
SCALE: 1-1/2"=1'-0"

NOT FOR CONSTRUCTION
BACKCHECK

US ARMY CORPS OF ENGINEERS
ALASKA DISTRICT

CONTRACT NO. ___
CONTRACTOR ___
CITY ___ STATE ___
PRIME CONTRACTOR ___ Recommended: ___
RESIDENT ENGINEER ___ Approved: ___ Date: ___

Symb	Action	Description	Date	Appvd

U.S. ARMY ENGINEER DISTRICT
CORPS OF ENGINEERS
ANCHORAGE, ALASKA

Designed: RWK
Drawn: RWK
Reviewed: Robert Clayton
Submitted: D. Frener
Date: 16 JULY 2009
Dwg Scale: AS NOTED
Plot Scale: 1:2
File: FTW336A-038-A6-02
Drawing #: F-211-13-01

CHief - Contr-Tr-Sa - Section
CHief - Contr-Tr-Sa - Section

INV. NO. W911KB-09-R-0007
PN 65076
FTW336A

FT. WAINWRIGHT, ALASKA
AIRCRAFT PARTS STORAGE
ARCHITECTURAL
DETAILS
DETAILS - DOORS & GLAZING

Reference number:
A6.02

Drawing x:\UNIFIED\EN-TE\Jobs\FTW336A\Dwgs\FTW336A-038-A6-02.dwg last saved on 7/7/2009 8:49 AM was plotted by Curfew, Donald L POA on 7/17/2009 6:39 AM

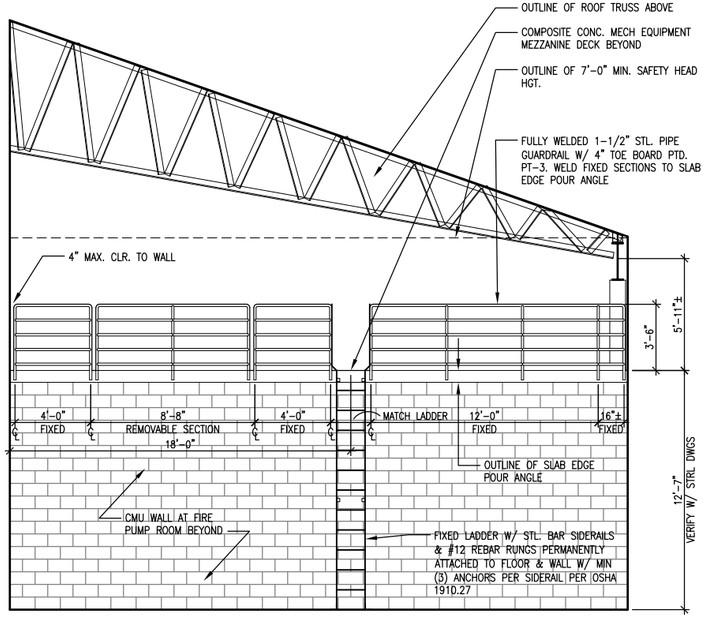

51 A1.03 A6.03 ELEVATION LOOKING TOWARDS MECH EQUIPMENT MEZZANINE

SCALE: 1/4"=1'-0"

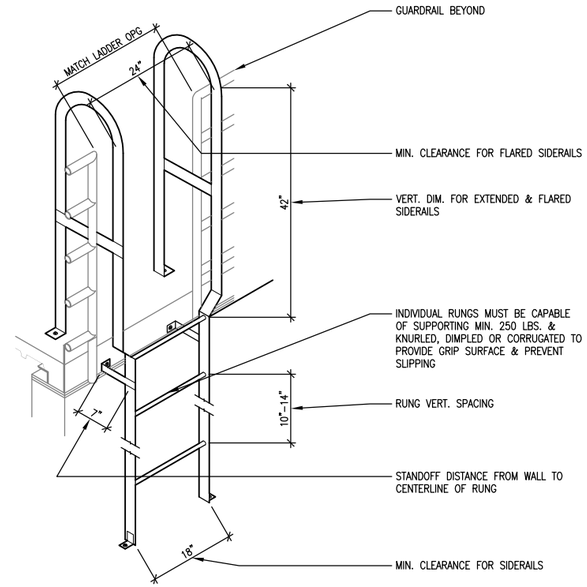

53 A6.03 A6.03 MECHANICAL MEZZANINE FIXED LADDER

SCALE: 3/4"=1'-0"

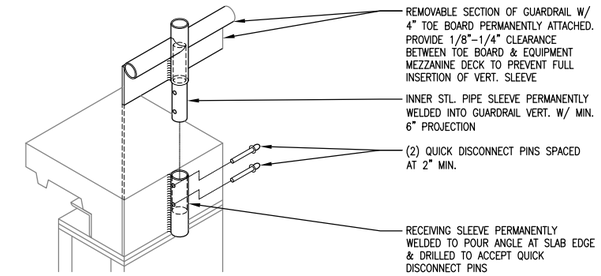

60 A6.03 A6.03 DETAIL AT REMOVABLE GUARDRAIL VERTICAL

SCALE: 1-1/2"=1'-0"

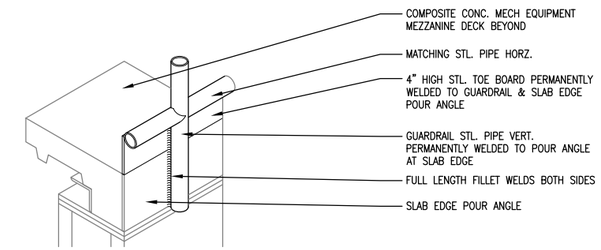

55 A6.03 A6.03 DETAIL AT FIXED GUARDRAIL VERTICAL

SCALE: 1-1/2"=1'-0"

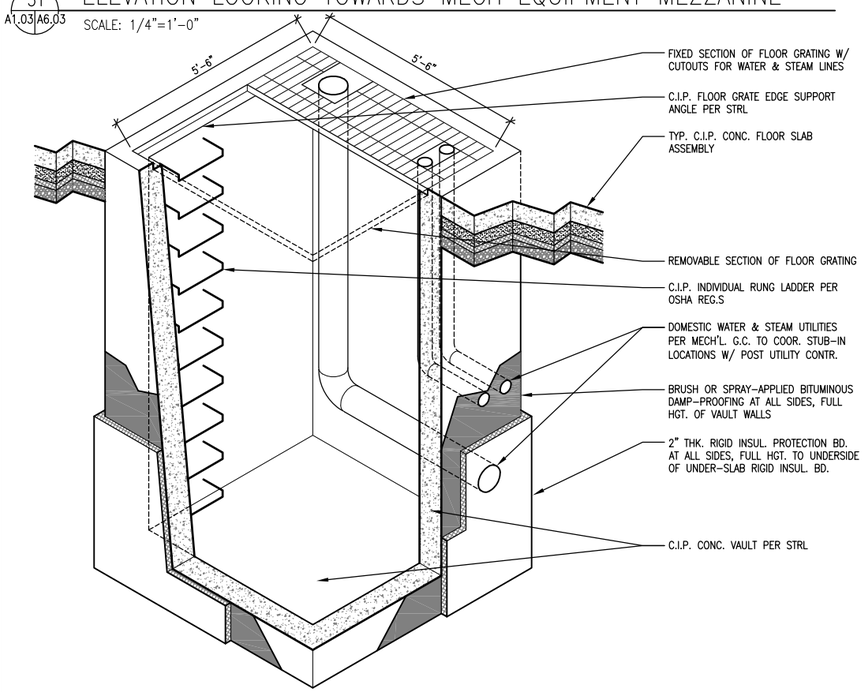

41 A1.03 A6.03 ISOMETRIC SECTION VIEW THRU UTILITIES VAULT

SCALE: 1/2"=1'-0"

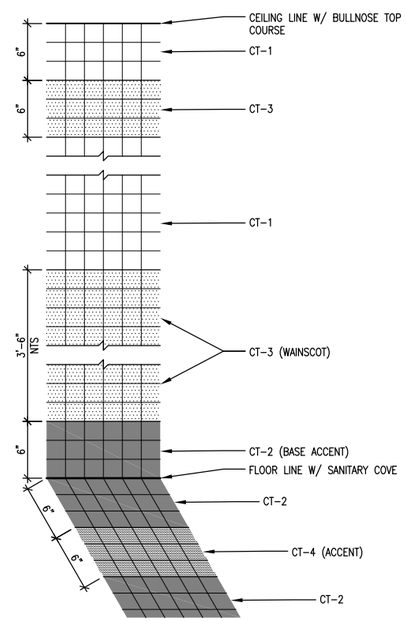

43 A5.03 A6.03 WALL/FLOOR TILE PATTERN

SCALE: 1"=1'-0"

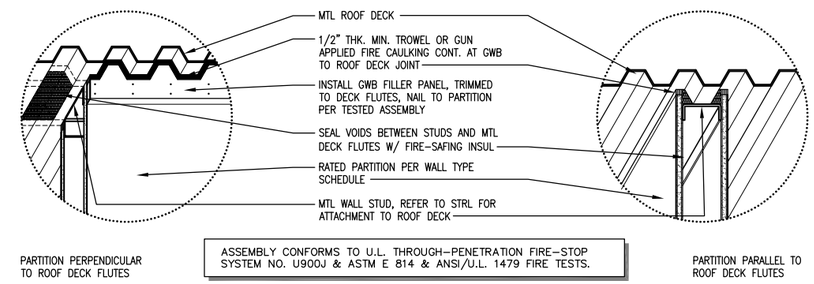

ASSEMBLY CONFORMS TO U.L. THROUGH-PENETRATION FIRE-STOP SYSTEM NO. U900J & ASTM E 814 & ANSI/U.L. 1479 FIRE TESTS.

50 A4.02 A6.03 1-HR WALL AT ROOF DECK

SCALE: 1-1/2"=1'-0"

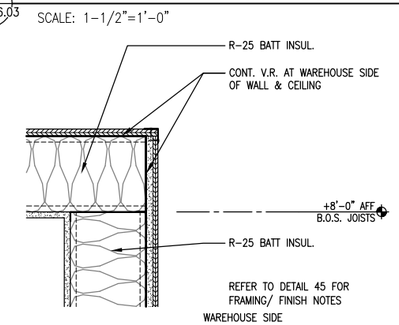

44 A1.03 A6.03 CEILING @ EXIT VESTIBULE

SCALE: 1"=1'-0"

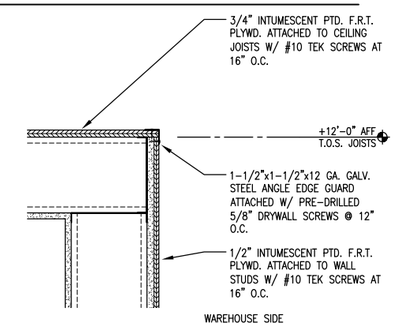

45 A1.02 A6.03 CEILING @ SECURED STORAGE

SCALE: 1"=1'-0"

NOT FOR CONSTRUCTION

BACKCHECK

US ARMY CORPS OF ENGINEERS
ALASKA DISTRICT

PRIME CONTRACTOR — Recommended: — RESIDENT ENGINEER — Approved: — Date:

CONTRACT NO. — CONTRACTOR — CITY — STATE

Symb	Action	Description	Date	Appvd

U.S. ARMY ENGINEER DISTRICT
CORPS OF ENGINEERS
ANCHORAGE, ALASKA

Designed: RWK
Drawn: RWK
Reviewed: Robert Clayton
Chief - CEPOA-EN-CH-TA
Submitted: D. Frenier
Chief - CEPOA-EN-CH-TA
Date: 16 JULY 2009
Dwg Scale: AS NOTED
Plot Scale: 1:2
File: FTW336A-039-A6-03
Drawing # F-2-211-13-01

INV. NO. W911KB-09-R-0007
PN 65076
FTW336A

FT. WAINWRIGHT, ALASKA
AIRCRAFT PARTS STORAGE
ARCHITECTURAL
DETAILS
DETAILS - BUILDING INTERIOR

Reference number:
A6.03

Drawing x:\UNIFIED\EN-TE\Jobs\FTW336A\Dwgs\FTW336A-039-A6-03.dwg last saved on 7/15/2009 1:12 PM was plotted by Curfew, Donald L POA on 7/17/2009 6:39 AM

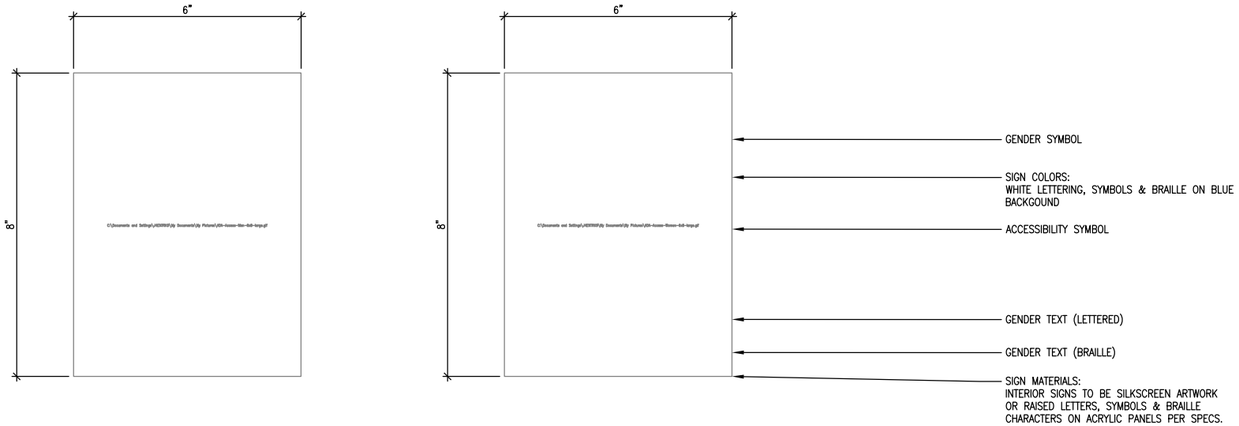

71 A5.03 A6.04 TYP. INTERIOR DOOR MTD. ADA LATRINE SIGNS

SCALE: 6"=1'-0"

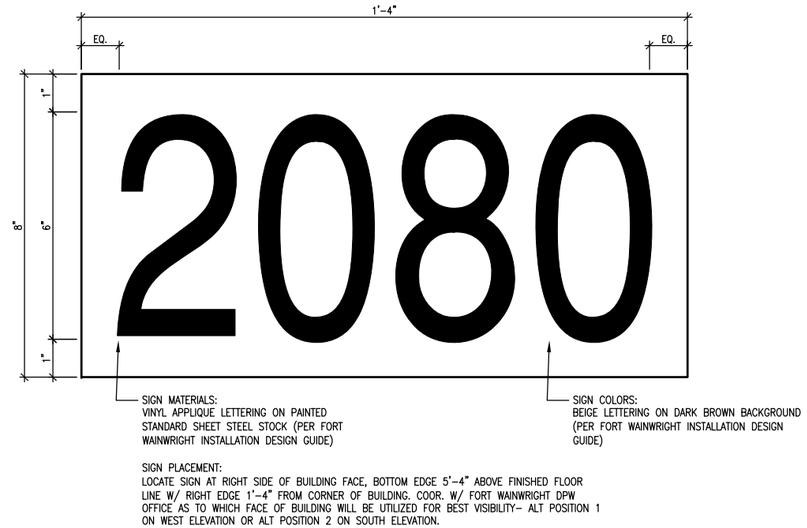

74 A3.01 A6.04 TYP. EXTERIOR WALL MTD. BUILDING NUMBER SIGN

SCALE: 6"=1'-0"

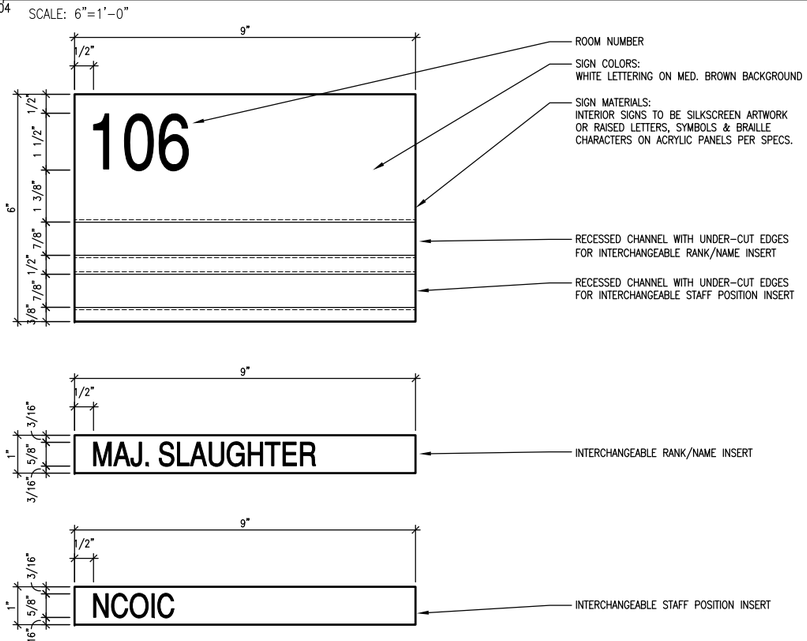

61 A5.03 A6.04 TYP. INTERIOR WALL MTD. OFFICE SIGN

SCALE: 6"=1'-0"

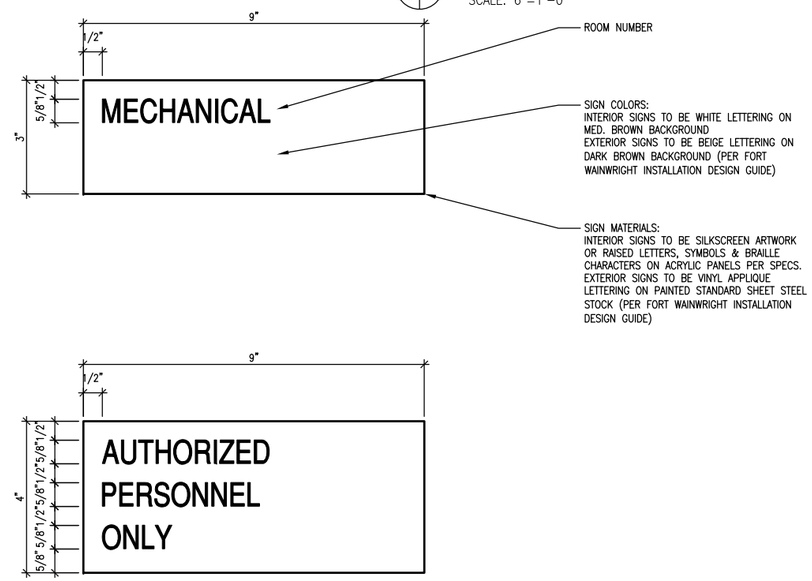

63 A5.03 A6.04 TYP. ANCILLARY SPACE SIGNS

SCALE: 6"=1'-0"

NOT FOR CONSTRUCTION

BACKCHECK

US ARMY CORPS OF ENGINEERS
ALASKA DISTRICT

CONTRACT NO. ___
CONTRACTOR ___
CITY ___ STATE ___
PRIME CONTRACTOR ___
Recommended: ___
RESIDENT ENGINEER ___
Approved: ___
Date: ___

Symb	Action	Description	Date	Appvd

U.S. ARMY ENGINEER DISTRICT
CORPS OF ENGINEERS
ANCHORAGE, ALASKA

Designed: RWK
Drawn: RWK
Reviewed: Robert Clayton
Chief - Section
Submitted: D. Frenner
Chief - Branch
Date: 16 JULY 2009
Dwg Scale: AS NOTED
Plot Scale: 1:2
File: FTW336A-040-A6-04
Drawing #: F-211-13-01

INV. NO. W911KB-09-R-0007
PN 65076
FTW336A

FT. WAINWRIGHT, ALASKA
AIRCRAFT PARTS STORAGE
ARCHITECTURAL
DETAILS
DETAILS - BUILDING SIGNAGE

Reference number:
A6.04

Drawing x:\UNIFIED\EN-TE\Jobs\FTW336A\Dwgs\FTW336A-040-A6-04.dwg last saved on 7/7/2009 8:50 AM was plotted by Curfew, Donald L POA on 7/17/2009 6:39 AM

GENERAL NOTES & STRUCTURAL DESIGN DATA

I. DESIGN LOADS & LOAD COMBINATIONS

1. DESIGN LOADS & LOAD COMBINATIONS IN ACCORDANCE WITH IBC 2006 CHAPTER 16 & & ASCE 7–05, EXCEPT AS NOTED BELOW.
2. BUILDING CLASSIFICATION IN ACCORDANCE WITH IBC 2006 (SECTION 1604.5)
   A. BUILDING CLASSIFICATION = CATEGORY II
3. FLOOR LIVE LOAD IN ACCORDANCE WITH IBC 2006 (SECTION 1607).
   A. MECHANICAL MEZZANINE = 125 PSF
4. ROOF LIVE LOAD IN ACCORDANCE WITH IBC 2006 (SECTION 1607.11).
   A. ROOF LIVE LOAD = 20 psf
5. SNOW LOAD IN ACCORDANCE WITH IBC 2006 (SECTION 1608), ASCE 7–05 & CEPOA–EN–TE–SA POLICY.
   A. GROUND SNOW LOAD = 75 psf
   B. MINIMUM ROOF SNOW LOAD = 50.4 psf
   C. IMPORTANCE FACTOR, I = 1.0
   D. HEATED BUILDING, Ct = 1.0
   E. PARTIALLY EXPOSED ROOF, Ce = 1.0
   F. SLOPED ROOF SNOW LOAD, Pf = 50 psf
   G. UNBALANCED SNOW LOADS PER ASCE 7–05.
6. WIND LOAD IN ACCORDANCE WITH IBC 2006 (SECTION 1609), ASCE 7–05
   A. BASIC WIND SPEED IS, V = 90 mph
   B. EXPOSURE CATEGORY C
   C. IMPORTANCE FACTOR, I = 1.0
   D. INTERNAL PRESSURE CODFFICIENT = 0.18 and –0.18
7. SEISMIC LOAD IN ACCORDANCE WITH IBC 2006 (SECTION 1613) & ASCE 7–05
   A. OCCUPANCY CATEGORY II
   B. IMPORTANCE FACTOR, I = 1.0
   C. MAPPED SPECTRAL RESPONSE ACCELERATIONS, Ss = 1.11, S1 = 0.31
   D. SITE CLASS = CLASS D. Fa=1.1, Fv=1.8.
   E. DESIGN SPECTRAL RESPONSE ACCELERATIONS, SDS = 0.81, SD1 = 0.37
   F. SEISMIC DESIGN CATEGORY D
   G. ANALYSIS PROCEDURE = EQUIVALENT LATERAL FORCE METHOD
   H. SEISMIC FORCE RESISTING SYSTEM: MOMENT FRAMES OR BRACED FRAMES
   I. DESIGN BASE SHEAR [INCLUDES 20% FLAT ROOF SNOW AND COLLATERAL LOAD]
   J. REDUNDANCY = PER MANUFACTURER

II. SPECIAL INSPECTION

1. SPECIAL INSPECTIONS SHALL BE IN ACCORDANCE WITH IBC 2006 CHAPTER 17 AND SPECIFICATION SECTION 01 45 35.
2. SEE SHEETS S0.2 AND S0.3 FOR SPECIAL INSPECTION SCHEDULES.

III. FOUNDATION DESIGN

1. INSTALL BACKFILL PER THE "GEOTECHNICAL RECOMMENDATIONS REPORT, ATF AIRCRAFT PARTS STORAGE FACILITY (FTW336A), FORT WAINWRIGHT, ALASKA" DATED MARCH 2009. PROVIDE MINIMUM 95% COMPACTION FOR BACKFILL AND SUBGRADE UNDER FOOTINGS AND SLAB–ON–GRADE.
2. ALLOWABLE BEARING CAPACITY 4000 LBS/FOOT^2.

IV. REINFORCED MASONRY

1. FULL STRESSES USED FOR DESIGN. f'm = 2000 PSI AS DETERMINED BY UNIT STRENGTH METHOD. SPECIAL INSPECTION REQUIRED.
2. HOLLOW LOAD BEARING CONCRETE MASONRY UNITS, GRADE N–1 PER ASTM C90. UNIT COMPRESSIVE STRENGTH 2800 PSI.
3. GROUT COMPRESSIVE STRENGTH 2800.
4. TYPE M MORTAR, PER ASTM C270.
5. LAY UNITS IN RUNNING BOND. GROUT WALLS SOLID. GROUT ALL BELOW GRADE FOUNDATION WALLS SOLID. MORTAR ALL JOINTS. ALL CELLS CONTAINING REINFORCEMENT SHALL BE GROUTED SOLID. GROUTED VERTICAL CELLS SHALL BE ALIGNED TO PROVIDE A CONTINUOUS 2" UNOBSTRUCTED OPENING. W
6. WALL CONSTRUCTION SHALL BE PER THE AMERICAN CONCRETE INSTITUTE ACI 530 "BUILDING CODE REQUIREMENTS FOR MASONRY STRUCTURES" AND ACI 530.1 "SPECIFICATIONS FOR MASONRY STRUCTURES". COLD WEATHER CONSTRUCTION SHALL COMPLY WITH IBC 2104.3. MATERIALS HANDLING, STORAGE AND PREPARATION SHALL BE PER IBC 2104.1. UNITS SHALL BE PLACED PER IBC 2104.1. GROUT SHALL BE PLACED PER IBC 2104.1.2.7.
7. REINFORCING STEEL PER ASTM A615, GRADE 60. WELDABLE REINFORCING PER ASTM A706 AND SHALL BE WELDED PER ANSI/AWS D1.4. FIELD BENDING BARS NOT PERMITTED. LAP VERTICAL REINFORCING 48 DIAMETERS AT SPLICES. PROVIDE 2–#5 VERTICAL BARS AT EACH JAMB, CORNER, INTERSECTION AND DISCONTINUOUS END. PROVIDE MATCHING DOWELS WITH STANDARD HOOKS IN FOOTINGS. WIRE BAR SPACERS FOR ALL VERTICAL REINFORCING. REINFORCEMENT SHALL BE SECURED AGAINST DISPLACEMENT [PRIOR TO GROUTING BY WIRE POSITIONERS OR OTHER SUITABLE DEVICES AT INTERVALS NOT EXCEEDING 200 BAR DIAMETERS. REINFORCE BASEMENT FOUNDATION WALLS AND SHEAR WALLS WITH 8" HIGH BOND BEAMS @ 24" OC REINFORCED WITH #5 BARS EXCEPT 2–#5 AT TOP OF WALL AND AT FLOOR DECK CONNECTIONS AND AT ROOF DECK CONNECTIONS. LAP HORIZONTAL REINFORCING 40 DIAMETERS AT SPLICES.PROVIDE CORNER BARS OF SAME SIZE AND NUMBER AS REQUIRED FOR BOND BEAMS AT CORNERS AND INTERSECTIONS [ALTERNATE DIRECTION AT INTERSECTIONS], WITH 40 DIAMETERS EACH LEG. PROVIDE 8" LINTELS ABOVE OPENINGS. PROVIDE STANDARD HOOKS ENGAGING END BARS AT WALL JAMBS, AND DISCONTINUOUS ENDS. PROVIDE 2–#5 HORIZONTAL ABOVE [UNLESS NOTED OTHERWISE] AND BELOW ALL WALL OPENINGS EXTENDING 2'–0" BEYOND OPENINGS.
8. GROUT IN EACH CELL SHALL BE CONSOLIDATED BY MECHANICAL VIBRATION DURING PLACING AND BEFORE LOSS OF PLASTICITY IN A MANNER TO FILL THE GROUT SPACE. GROUT SHALL BE RECONSOLIDATED BY MECHANICAL VIBRATION AFTER THE EXCESS WATER IS ABOSORBED INTO THE UNITS (USUALLY AFTER 3 TO 5 MINUTES).
9. CLEANOUTS ARE REQUIRED FOR GROUT POURS OVER 5 FEET IN HEIGHT. CLEANOUTS SHALL BE LOCATED IN THE BOTTOM COURSE AT EVERY VERTICAL BAR BUT SHALL NOT BE SPACED MORE THAN 32 INCHES ON CENTER FOR SOLIDLY GROUTED MASONRY.
10. GROUT SHALL BE PLACED IN A CONTINUOUS POUR IN GROUT LIFTS NOT EXCEEDING 6 FEET.

V. STEEL NOTES

1. ALL STEEL DESIGN SHALL BE IN ACCORDANCE WITH AISC MANUAL OF STEEL CONSTRUCTION, CURRENT EDITION.
2. CONTRACTOR SHALL DESIGN STEEL CONNECTIONS NOT SHOWN ON PLANS IN ACCORDANCE WITH AISC "MANUAL OF STEEL CONSTRUCTION".
3. ALL STEEL MEMBERS SHALL BE SHOP PRIMED U.N.O. NO PAINT ON SURFACES EMBEDDED IN CONCRETE, MEMBERS RECEIVING SPRAY ON FIRE PROOFING, FAYING AREAS OF HIGH STENGTH BOLTED CONNECTIONS OR WITHIN 3 INCHES OF FIELD WELDS.
4. PROVIDE CAP PLATES FOR ALL TUBE AND PIPE COLUMNS PRIOR TO ERECTION. PROVIDE WEEP HOLES AT BOTTOM OF COLUMNS.
5. UNLESS DESIGNED OTHERWISE STEEL MEMBERS SHALL CONFORM TO THE FOLLOWING:
   A. ALL STEEL W–SHAPE MEMBERS FOR BUILDING FRAMING SHALL CONFORM TO ASTM A 992/A 992M.
   B. MISCELLANEOUS STEEL MEMBERS AND PLATE SHALL CONFORM TO ASTM A 36/A 36M.
   C. HSS STEEL MEMBERS SHALL CONFORM TO ASTM A 500, GRADE B.
   D. PIPE SHALL CONFORM TO ASTM A53, GRADE B.
6. ALL BOLTED CONNECTIONS SHALL BE FULLY PRETENSIONED A325N BOLTS WITH DIAMETER BOLTS AS SHOWN ON PLANS. U.N.O. BOLT HOLES SHALL HAVE AISC STANDARD ROUND HOLES OR SHORT SLOTTED HOLES WITH SLOT PERPENDICULAR TO LINE OF FORCE. FULLY PRE–TENSIONED BOLTS SHALL BE PRETENSIONED WITH TWIST OFF BOLTS PER ASTM F1852 OR F2280 OR DIRECT TENSION INDICATOR WASHERS PER ASTM F959. PROVIDE PRE–INSTALLATION CALIBRATION WITH SKIDMORE–WILHELM DEVICE.
7. UNLESS NOTED OTHERWISE. ANCHOR RODS SHALL CONFORM TO ASTM F1554 GRADE 36.
8. ALL WELDING SHALL BE IN ACCORDANCE WITH THE LATEST EDITION OF AWS D1.1., BY CERTIFIED WELDERS USING ELECTRODES CONFORMING TO CLASS E70. ALL WELDS SHALL BE 3/16–in MINIMUM, UNLESS OTHERWISE NOTED.
9. ALL BRACED FRAME GUSSET WELDS AND MOMENT FRAME WELDS SHALL HAVE A CHARPY V–NOTCH TOUGHNESS OF 20 FT*LBS AT –20° F AS DETERMINED BY THE APPROPRIATE AWS CLASSIFICATION TEST METHOD OR MANUFACTURER CERTIFICATION AND A CHARPY V–NOTCH TOUGHNESS OF 40 FT*LBS AT 70 °F AS DETERMINED AISC341–05 APPENDIX X OR OTHER APPROVED METHOD. SUBMIT INFORMATION PER AISC 341–05 SECTION 7.3B FOR ELECTRODES NOT REQUIRING TESTING.
10. COLUMN TO BASE PLATE WELDS AND SHEAR LUG TO BASE PLATE WELDS SHALL BE MADE WITH FILLER METAL WITH A CHARPY V–NOTCH TOUGHNESS OF 20 FT*LBS AT 0° F AS DETERMINED BY THE APPROPRIATE AWS A5 CLASSIFICATION TEST METHOD OR MANUFACTURER CERTIFICATION.
11. LATERAL FORCE RESISTING SYSTEM CONNECTIONS SHALL BE PROPORTIONED TO FAIL BY DUCTILE LIMIT STATE IN EITHER THE MEMBER OR CONNECTION PER AISC 341–05 SECTION 7.1.
12. PROTECTED ZONES: PROTECTED ZONES ON BRACES ARE LOCATED WITHIN 8 INCHES OF GUSSETS AND THE CENTER 5 FEET CENTERED MIDWAY BETWEEN GUSSETS. THERE SHALL BE NO WELDED, BOLTED, SCREWED OR SHOT IN OR SHEAR STUD CONNECTIONS TO PROTECTED ZONES. AIR ARC GOUGING, TACK WELDS, THERMAL CUTTING, ERECTION AIDS IN PROTECTED ZONES SHALL BE REPAIRED AS DIRECTED BY THE ENGINEER OF RECORD.
13. U.N.O. WIRES FOR SUSPENDED CEILINGS AND JOIST TIE ROD BRACING SHALL BE "GALVANIZED SOFT ANNNEALED MILD STEEL WIRE", AS DEFINED IN ASTM A641 (CLASS 1 COATING). #10 WIRE DIAMETER=.135" & #12 WIRE DIAMETER=.106" AS SHOWN BY U.S. STEEL WIRE GAGE. 4 TWISTS WITHIN 1.5" @ CONNECTED PARTS.
14. AIRCRAFT CABLE SHALL CONFORM TO ASTM A1023. AIRCRAFT CABLE AND ACCESSORIES SHALL BE GALVANIZED. FORM LOOPS WITH THIMBLES AND WIRE ROPE CLIPS OR SWAGE FITTINGS PER MANUFACTURER INSTALLATION INSTRUCTIONS. THIMBLES MAY BE OMITTED FOR LOOPS OVER 2" DIAMETER TIE RODS.

VI. CONCRETE NOTES

1. ALL CONCRETE DESIGN SHALL BE IN ACCORDANCE WITH ACI 318–05/318R–05.
2. ALL CAST–IN–PLACE CONCRETE SHALL HAVE MINIMUM 28 DAY COMPRESSIVE STRENGTH, f'c, AS FOLLOWS:
   SLAB–ON–GRADE f'c = 4,000 psi
   PEDESTALS, PILASTERS, FOUNDATION WALLS f'c = 4,000 psi
   FOOTINGS F'c = 3,000 psi
   COMPOSITE FLOOR DECK f'c = 3,000 psi
   OTHER CONCRETE f'c =3,000 psi
3. NON–SHRINK NON–METALLIC GROUT SHALL CONFORM TO ASTM C1107.
4. ALL REINFORCING BARS SHALL CONFORM TO ASTM A 615, GRADE 60.
5. U.N.O. MINIMUM REINFORCING BAR LAP SPLICES SHALL BE 57 BAR DIAMETERS FOR #3 THROUGH #6 AND 71 BAR DIAMETERS #7 & LARGER. OR 12–in WHICHEVER IS GREATER.
6. FORMED SURFACES SHALL BE PER THE SPECIFICATION 03 31 00.00 10.
7. CONCRETE COVER: THE FOLLOWING MINIMUM CONCRETE COVER SHALL BE PROVIDED FOR REINFORCEMENT FOR CAST–IN–PLACE CONCRETE:
   A. CONCRETE CAST AGAINST AND PERMANENTLY EXPOSED TO EARTH 3 INCH
   B. CONCRETE EXPOSED TO EARTH OR WEATHER:
   #6 THROUGH #8 2 INCH
   #5 & SMALLER 1½ INCH
   C. CONCRETE NOT EXPOSED TO WEATHER OR IN CONTACT WITH GROUND :#14 AND #18 BARS 1½ INCH, #11 AND SMALLER ¾ INCH
   BEAMS, COLUMNS – PRIMARY REINFORCEMENT, TIES, STIRRUPS, SPIRALS 1 ½ INCH
8. U.N.O. REINFORCEMENT HOOKS SHALL BE AS FOLLOWS:
   A. STIRRUP HOOKS: #5 AND SMALLER 135° BEND WITH 6 BAR DIAMETER W/ EXTENSION.
   B. SEISMIC TIE HOOKS: #5 AND SMALLER –135° BEND WITH 6 BAR DIAMETER W/ EXTENSION ONE END, 90° BEND W/ 6 BAR DIAMETER EXTENSION OTHER END.
   C. STANDARD HOOKS: 90° BEND PLUS 12 BAR DIAMETER EXTENSION.
9. MINIMUM REINFORCEMENT BEND DIAMETERS SHALL BE AS FOLLOWS: 6 BAR DIAMETERS FOR #3 THROUGH #8, 8 BAR DIAMETERS FOR #9,#10#11, 10*DIAMETERS #14, #18.
10. PROVIDE MATCHING CORNER BARS AT WALL AND STRIP FOOTING INTERSECTIONS AND TEES WITH 57 DIAMETER LAPS AT LEGS TO HORIZONTAL REINFORCEMENT.

VII STEEL DECK NOTES:

1. STEEL DECK AND COMPOSITE FLOOR DECK SHALL BE DESIGNED BY THE MANUFACTURER. METAL DECKING SHALL BE GALVANIZED STEEL (G–60 COATING INTERIOR), DESIGNED, MANUFACTURED AND INSTALLED PER SDI 30 (2001) DESIGN MANUAL FOR COMPOSITE DECKS, FORM DECKS, AND ROOF DECKS AND SDI DDMO3(3RD EDITION) DIAPHRAGM DESIGN MANUAL.
2. MANUFACTURER TO PROVIDE ADDITIONAL METAL REINFORCEMENT AND CLOSURE PIECES AS REQUIRED FOR STRENGTH AND CONTINUITY OF DECKING.
3. DO NOT SUSPEND MECHANICAL, ELECTRICAL OR PLUMBING FROM STEEL ROOF DECK. ONLY SUSPEND FROM FLOOR DECK PER ANCHOR MANUFACTURER ICC EVALUATION REPORTS.
4. ROOF DECK

A. DECK UNITS SHALL BE MINIMUM 18 GAGE THICK, Imin = 0.292 in^4/ft, SPmin = 0.318 in^3/ft, SNmin = 0.327 in^3/ft. FLUTE DEPTH 1.5 INCH.

B. FASTEN PER DETAIL 1/S4.01. BUTTON PUNCHING OF SIDELAPS IS PROHIBITED FOR ROOF DECKING.

STRUCTURAL ABBREVIATIONS

SYMBOLS

@	AT
#	NUMBER
&	AND
L	ANGLE
⅃L	DOUBLE ANGLE
℄	CENTERLINE
ø	DIAMETER, ROUND
PL	PLATE

CODES & STANDARDS

ACI	AMERICAN CONCRETE INSTITUTE
AISC	AMERICAN INSTITUTE OF STEEL CONSTRUCTION
ASCE	AMERICAN SOCIETY OF CIVIL ENGINEERS
ASTM	AMERICAN SOCIETY FOR TESTING AND MATERIALS
AWS	AMERICAN WELDING SOCIETY
CEPOA	US ARMY CORPS OF ENGINEERS, AK DISTRICT
FEMA	FEDERAL EMERGENCY MANAGEMENT AGENCY
IBC	INTERNATIONAL BUILDING CODE
LRFD	LOAD AND RESISTANCE FACTOR DESIGN
UFC	UNIFIED FACILITIES CRITERIA

GENERAL

AB	ANCHOR BOLT
APPROX	APPROXIMATELY
ARCH	ARCHITECTURAL
BB	BEARING BAR(S)
BLDG	BUILDING
BM	BEAM
BOD	BOTTOM OF DECK
BOG	BOTTOM OF GIRT
BOTT	BOTTOM
CCJ	CRACK CONTROL JOINT
CHKR	CHECKER
CIP	CAST IN PLACE
CL	CENTERLINE
CLR	CLEAR
COL	COLUMN
CONC	CONCRETE
CONST J	CONSTRUCTION JOINT
CONT	CONTINUOUS
DET	DETAIL
DFT	DRY FILM THICKNESS
DICA	DRILL–IN–CONCRETE–ANCHOR
DIST	DISTANCE
DO	DITTO
DWG(S)	DRAWING(S)
(E)	EXISTING
E	EAST
EF	EACH FACE
EL	ELEVATION
ELEC	ELECTRICAL
EMBED	EMBEDMENT
EQ	EQUAL
EW	EACH WAY
EXP	EXPANSION
FAB	FABRICATED
FF	FINISH FLOOR
FLR	FLOOR
FOS	FACE OF STUD
FOW	FACE OF WALL
FND	FOUNDATION
FS	FAR SIDE
FTG	FOOTING
GALV	GALVANIZED
HDG	HOT DIPPED GALVANIZED
HGT	HEIGHT
HORZ	HORIZONTAL
IJ	ISOLATION JOINT
INT	INTERIOR
JT	JOINT
JST	JOIST
LLH	LONG LEG HORIZONTAL
LLV	LONG LEG VERTICAL
LONG	LONGITUDINAL
LSL	LONG–SLOTTED HOLE

GENERAL (CONTINUED)

MANF	MANUFACTURER
MAX	MAXIMUM
MBR(S)	MEMBERS(S)
MECH	MECHANICAL
MEZZ	MEZZANINE
MIN	MINIMUM
MISC	MISCELLANEOUS
(N)	NEW
N	NORTH
NFS	NON–FROST SUSCEPTIBLE
NO.	NUMBER
NS	NEAR SIDE
NTS	NOT TO SCALE
OC	ON CENTER
OD	OUTSIDE DIAMETER
OPP	OPPOSITE
OVS	OVERSIZED HOLES
PAF	POWDER ACTUATED FASTENER
PL	PLATE
R	RADIUS
REINF	REINFORCING, REINFORCEMENT, REINFORCED
REQD	REQUIRED
RO	ROUGH OPENING
RM	ROOM
S	SOUTH
SCHED	SCHEDULE
SECT	SECTION
SFRS	SEISMIC–FORCE–RESISTING SYSTEM
SHT	SHEET
SIM	SIMILAR
SLH	SHORT LEG HORIZONTAL
SLV	SHORT LEG VERTICAL
SOG	SLAB ON GRADE
SPEC	SPECIFICATION
SQ	SQUARE
SS	STAINLESS STEEL
SSL	SHORT–SLOTTED HOLE
STD	STANDARD
STL	STEEL
SYM	SYMETRICAL
T	TOP
THK	THICK
THRU	THROUGH
TOC	TOP OF CONCRETE
TOF	TOP OF FOOTING
TOG	TOP OF GIRT
TOS	TOP OF STEEL
TOW	TOP OF WALL
TRANS	TRANSVERSE
TYP	TYPICAL
UNO	UNLESS NOTED OTHERWISE
VERT	VERTICAL
W	WEST
W/	WITH
W/O	WITHOUT
WGT	WEIGHT
WL	WORK LINE
WP	WORK POINT

STRUCTURAL STEEL SHAPES

C	CHANNELS AMERICAN STANDARD
HP	HP SHAPE
HSS	HOLLOW STRUCTURAL SHAPE
L	ANGLE
M	M SHAPE
MC	MISCELLANEOUS CHANNEL
MT	STRUCTURAL TEE FROM M SHAPE
S	S SHAPE
ST	STRUCTURAL TEE FROM S SHAPE
W	W SHAPE
WT	STRUCTURAL TEE FROM W SHAPE

NOT FOR CONSTRUCTION

BACKCHECK

US ARMY CORPS OF ENGINEERS
ALASKA DISTRICT

CONTRACT NO. ___
CONTRACTOR ___
CITY ___ STATE ___
PRIME CONTRACTOR ___
Recommended: ___
RESIDENT ENGINEER ___
Approved: ___
Date: ___

Symb	Action	Description	Date	Appvd

U.S. ARMY ENGINEER DISTRICT
CORPS OF ENGINEERS
ANCHORAGE, ALASKA

Designed: SMH
Drawn: SMH
Reviewed: P. Lorn
Chief – CEPOA–EN–TE–SA – Section
Submitted: D. Fraher
Chief – CEPOA–EN–TE – Branch
Date: 16 JULY 2009
Dwg Scale: AS NOTED
Plot Scale: 1:2
File: FTW336A–041–S0–1
Drawing No: F–211–13–01

INV. NO. W911KB–09–R–0007
PN 65076
FTW336A

FT. WAINWRIGHT, ALASKA
AIRCRAFT PARTS STORAGE
STRUCTURAL
GENERAL
GENERAL NOTES AND ABBREVIATIONS 1

Reference number:
S0.1

Drawing x:\UNIFIED\EN–TE\Jobs\FTW336A\Dwgs\FTW336A–041–S0–1.dwg last saved on 7/13/2009 6:34 AM was plotted by Curfew, Donald L POA on 7/17/2009 6:39 AM

GENERAL NOTES CONTINUED

VII STEEL DECK NOTES CONTINUED:

5. FLOOR DECK

A. DECK UNITS SHALL BE MINIMUM 20 GAGE THICK, Imin = 0.216 in^4/ft, +Smin = 0.235 in^3/ft, −Smin = 0.248 in^3/ft. FLUTE DEPTH 1.5 INCHES. PROVIDE EMBOSSMENTS AND INDENTATIONS IN THE DECK TO DEVELOP COMPOSITE ACTION WITH THE CONCRETE FILL. 4" TOTAL SLAB THICKNESS U.N.O. f'c=3000 PSI. REINFORCE WITH #3 @ 12" OC EACH WAY LOCATED @ SLAB CENTERLINE.

B. FASTEN PER DETAIL 1/S4.01.

VIII. STEEL JOIST NOTES

1. STEEL JOISTS SHALL BE MANUFACTURED AND INSTALLED PER THE STEEL JOIST INSTITUTE'S SPECIFICATIONS U.N.O.
2. PROVIDE BRIDGING AND ERECTION BRACING PER MANUFACTURER'S INSTRUCTIONS.
3. PROVIDE STANDARD CAMBER IN ALL JOISTS. ALLOWABLE LIVE LOAD DEFLECTION = L/360.
4. WELD K-JOISTS WITH 3/16-in FILLET EACH SIDE FOR FULL LENGTH OF CONTACT. WELD LH-JOISTS PER DETAIL.
5. UNDERSLUNG LH SCISSOR JOIST PROFILE AND LOADING PER SHEET S0.5. K-JOIST SEATS 2.5" DEEP U.N.O..
6. MECHANICAL BRACING, ELECTRICAL BRACING AND PLUMBING BRACING SHALL ONLY BE CONNECTED TO TOP FLANGE OF JOISTS.

IX. LIGHT GAGE STEEL FRAMING

1. ALL LIGHT GAGE STUD / TRACK MEMBERS SHALL BE MANUFACTURED BY A SSMA MEMBER COMPANY OR APPROVED EQUIVALENT. ALL STRUCTURAL MEMBERS SHALL BE DESIGNED PER THE AMERICAN IRON AND STEEL INSTITUTE (AISI) "SPECIFICATION FOR THE DESIGN OF COLD-FORMED STEEL STRUCTURAL MEMBERS", LATEST EDITION. STUDS COVERED WITH MASONRY VENEER SHALL BE DESIGNED FOR AN L/600 DEFLECTION LIMIT. STUDS COVERED WITH EIFS SHALL BE DESIGNED FOR AN L/240 DEFLECTION LIMIT.
2. ISOLATE NON-BEARING PARTITION STUDS FROM BUILDING STRUCTURAL DEFLECTIONS AND STUD WALLS WITH PROPRIETARY DEFLECTION TRACKS OR PROPRIETARY DEFLECTION CLIPS. DO NOT CONNECT FINISH TO TRACKS WHERE DEFLECTION OCCURS. PROVIDE FIRE FIRE RESISTIVE JOINT SYSTEMS AT SLIP CONNECTIONS IN RATED WALLS.
3. COLD FORMED STEEL SHALL MEET ASTM OR A653 (FY=50000 PSI) FOR 14 OR 16 GAGE MEMBERS AND ASTM A653 (FY=33000 PSI) FOR 18 GAGE AND LIGHTER MEMBERS. ALL STUDS, TRACKS AND JOISTS SHALL BE GALVANIZED AND HAVE A MINIMUM G-60 COATING

LEGEND: 8000S200-54
800 DEPTH = 8.0"
STYLE = "S" STRUCTURAL, "T" TRACK
200 FLANGE WIDTH = 2"
54 GAGE OF STUD (IN MILS) 54 = 16 GAGE

STEEL GAGE / THICKNESS [MILS]:
20 33
18 43
16 54
14 68
12 97

4. FASTENERS FOR CONNECTING LIGHTGAGE MEMBERS TO LIGHTGAGE MEMBERS SHALL BE #10 SELF DRILLING U.N.O, SELF TAPPING SCREWS WITH A MINIMUM OF 3 THREADS PENETRATION OR WELDS, UNLESS NOTED OTHERWISE. SCREWS SHALL HAVE A MINIMUM 5/16" HEAD OR HAVE A WASHER WITH A 5/16 HEAD. PROVIDE 1 SCREW FROM TRACK TO EACH STUD FLANGE. FASTENERS FOR CONNECTING LIGHTGAGE MEMBERS TO STRUCTURAL STEEL SHALL BE DEFLECTION CLIPS W/ NO. 12 SCREWS. FASTENERS FOR CONNECTING LIGHTGAGE MEMBERS TO CONCRETE SHALL BE BY .145" DIAMETER X 1-1/2" PENETRATION POWDER ACTUATED FASTENERS AT 8" O.C. UNLESS NOTED OTHERWISE.
5. PROVIDE ALL ACCESSORIES INCLUDING TRACK, CLIPS, WEB STIFFENERS, ANCHORS, FASTENING DEVICES, RESILIENT CLIPS, AND OTHER ITEMS REQUIRED FOR A COMPLETE AND PROPER INSTALLATION. INSTALL ALL ITEMS RECOMMENDED BY THE MANUFACTURER.
6. FASTENING OF COMPONENTS SHALL BE WITH SELF-DRILLING SCREWS OR WELDS OR POWDER ACTUATED FASTENERS OF SUFFICIENT SIZE AND SPACING TO ENSURE THE STRENGTH OF THE CONNECTION. WIRE TYING OF COMPONENTS SHALL NOT BE PERMITTED. ALL WELDS SHALL BE TOUCHED UP WITH A ZINC-RICH PAINT.
7. PROVIDE COMMERCIAL GROUT FOR LEVELING THE FLOOR RUNNER OF STEEL STUD PARTITIONS AS REQUIRED.
8. ISOLATE ALL INTERIOR AND EXTERIOR STUD WALLS FROM VERTICAL STRUCTURAL DEFLECTIONS WITH DEFLECTION TRACK OR DEFLECTION CLIPS AS SHOWN. FOLLOW SSMA RECOMMENDED GUIDELINES WHERE CONNECTIONS NOT SHOWN.
9. INTERIOR STUDS SHALL BE 362S162-43 @ 16" OC FOR $3\frac{5}{8}$" STUDS U.N.O. AND 600S162-43 @ 16" OC FOR 6" STUDS U.N.O.
10. CEILING JOISTS SHALL BE 800S200-54 @ 16" OC U.N.O. ALIGN JOISTS OVER STUDS. PROVIDE 800T150-43 RIM JOIST OR 800SXX-XX BLOCKING OVER ALL INTERIOR WALL JOIST SUPPORTS. INSTALL $\frac{3}{4}$" FORTA-CRETE STRUCTURAL PANELS OR APPROVED EQUIVALENT OVER TOP FLANGE OF INTERIOR CEILING JOISTS WITH NO. 8-18 SELF-TAPPING PANCAKE HEAD SCREWS @ 6" OC OVER WALLS AND ALONG SUPPORTED PANEL EDGES AND @ 12" OC IN THE FIELD. LAYOUT FORTA-CRETE PANELS [OR APPROVED EQIVALENT] WITH STRENGTH AXIS SPANNING OVER JOISTS WITH END JOINTS STAGGERED PER PLAN.

X. SUSPENDED CEILING SYSTEMS:

1. INSTALL SUSPENDED GYPSUM WALL BOARD CEILINGS WITH PROPRIETARY DRY WALL SUSPENSION SYSTEM COMPOSED OF MAIN TEES AND CROSS TEES PER MANUFACTURER INSTRUCTIONS AND ICC EVALUATION REPORT. BRACE PER ICC REPORT AND THE FOLLOWING.
2. INSTALL SUSPENDED ACCOUSTICAL TILE CEILINGS PER THE FOLLOWING. SUSPENDED LAY IN ACCOUSTICAL TILE CEILING SYSTEMS SHALL BE INSTALLED PER CISCA "GUIDELINES FOR SEISMIC RESTRAINT OF DIRECT HUNG SUSPENDED CEILING ASSEMBLIES" AND THE FOLLOWING. A HEAVY DUTY T-BAR GRID SYSTEM SHALL BE USED. THE WIDTH OF PERIMETER SUPPORTING CLOSURE ANGLES SHALL NOT BE LESS THAN 2 INCHES UNLESS ICC APPROVED PROPRIETARY SLIP CLIP CONNECTIONS ARE USED. IN EACH PERPENDICULAR DIRECTION ONE END OF THE CEILING GRID SHALL BE ATTACHED TO THE CLOSURE ANGLE. THE OTHER END SHALL HAVE A .75" CLEARANCE FROM THE WALL AND SHALL REST UPON AND BE FREE TO SLIDE ON A CLOSURE ANGLE UNLESS CONNECTED WITH ICC APPROVED PROPRIETARY SLIP CONNECTORS. HORIZONTAL RESTRAINT OF THE CEILING TO THE BAR JOISTS, PURLINS AND STRUCTURAL STEEL SHALL BE PROVIDE WITH DIAGONAL SPLAY WIRES PER THE CISCA GUIDELINES. A SEISMIC 1.5" SEPARATION JOINT OR FULL HEIGHT PARTITION SHALL SPLIT CEILING AREAS INTO LESS THAN 2500 SQUARE FEET. SPRINKLER HEADS AND OTHER PENETRATIONS SHALL HAVE A 2-INCH OVERSIZE RING, SLEEVE OR ADAPTOR TO ALLOW FREE MOVEMENT OF 1" IN ALL HORIZONTAL DIRECTIONS. CHANGES IN CEILING PLANE ELEVATION SHALL BE PROVIDED WITH POSITIVE BRACING. CABLE TRAYS AND ELECTRICAL CONDUITS SHALL BE INDEPENDENTLY SUPPORTED AND BRACED INDEPENDENTLY OF THE CEILING. SUSPENDED CEILING SYSTEMS SHALL HAVE SPECIAL INSPECTION.
3. A COMPRESSION STRUT FASTENED TO THE MAIN RUNNER SHALL BE EXTENDED TO AND FASTENED TO THE STRUCTURAL MEMBERS SUPPORTING THE ROOF OR FLOOR ABOVE AT ALL BRACING WIRES. THE STRUT SHALL BE ADEQUATE TO RESIST THE VERTICAL COMPONENT INDUCED BY THE BRACING WIRES. ATTACHMENT OF THE RESTRAINT WIRES TO THE STRUCTURE ABOVE SHALL BE ADEQUATE FOR THE LOAD IMPOSED.
4. POWDER ACTUATED FASTENERS SHALL NOT BE USED TO RESIST SEISMIC TENSION UNLESS APPROVED FOR SUCH USE BY AN ICC EVALUATION REPORT.
5. FASTEN HANGER WIRES AND BRACING WIRES PER THE SUGGESTED DETAILS IN THE CISCA GUIDELINES OR PER GOVERNMENT APPROVED ALTERNATIVE.

XI. MECHANICAL, ELECTRICAL & MISCELLANEOUS EQUIPMENT

1. MECHANICAL, ELECTRICAL & MISCELLANEOUS EQUIPMENT SHALL HAVE SEISMIC BRACING DESIGNED IN ACCORDANCE WITH IBC 2006 (SECTION 1621) AND IN ACCORDANCE WITH THE SPECIFICATIONS. THE MORE STRINGENT OF THE TWO SHALL GOVERN WHERE DISCREPANCIES OCCUR.
2. FASTENERS SHALL BE INSTALLED PER ICC EVALUATION REPORT RECOMMENDATIONS.
3. POWDER ACTUATED FASTENERS SHALL NOT BE USED TO RESIST SEISMIC TENSION UNLESS ALLOWED BY ICC EVALUATION REPORT RECOMMENDATIONS.
4. BRACING SHALL NOT BE CONNECTED TO STEEL ROOF DECK. WHERE CONNECTED TO STEEL JOISTS BRACING SHALL ONLY BE CONNECTED TO JOIST TOP CHORDS.

TABLE 4 – SPECIAL INSPECTION SCHEDULE

REQUIRED VERIFICATION & INSPECTION FOR SEISMIC RESISTANCE

VERIFICATION & INPSECTION	CONTINUOUS	PERIODIC	REFERENCED STANDARD	IBC REFERENCE
1. STRUCTURAL STEEL:				
A. STRUCTURAL WELDING IN ACCORDANCE WITH AISC 341	X	–	AWS D1.1, AISC 341	1707.2
2. ARCHITECTURAL COMPONENTS:				
A. INSPECTION DURING THE ERECTION AND FASTENING OF EXTERIOR CLADDING, INTERIOR AND EXTERIOR NONBEARING WALLS AND INTERIOR AND EXTERIOR VENEER	–	X	–	1707.6
3. MECHANICAL AND ELECTRICAL COMPONENTS:				
A. INSPECTION DURING THE ANCHORAGE OF ELECTRICAL EQUIPMENT FOR EMERGENCY OR STANDBY POWER SYSTEMS	–	X	–	1707.7
B. INSPECTION DURING INSTALLATION OF PIPING SYSTEMS INTENDED TO CARRY FLAMMABLE, COMBUSTIBLE OR HIGHLY TOXIC CONTENTS AND THEIR ASSOCIATED MECHANICAL UNITS	–	X	–	1707.7
C. INSPECTION DURING THE INSTALLATION OF HVAC DUCTWORK THAT WILL CONTAIN HAZARDOUS MATERIALS	–	X	–	1707.7
D. INSPECTION FOR THE INSTALLATION OF THE FOLLOWING COMPONENTS, WHERE THE COMPONENT HAS A COMPONENT IMPORTANCE FACTOR OF 1.0 OR 1.5 IN ACCORDANCE WITH SECTION 9.6.1.5 OF ASCE 7. EVIDENCE OF THE QUALITY CONTROL PROGRAM SHALL BE PERMANENTLY IDENTIFIED ON EACH PIECE OF EQUIPMENT BY A LABEL				
1) EQUIPMENT USING COMBUSTIBLE ENERGY SOURCES	–	X	–	1707.7.1
2) ELECTRICAL MOTORS, TRANSFORMERS, SWITCHGEAR UNIT SUBSTATIONS AND MOTOR CONTROL CENTERS	–	X	–	1707.7.1
3) RECIPROCATING AND ROTATING-TYPE MACHINERY	–	X	–	1707.7.1
4) PIPING DISTRIBUTION SYSTEMS 3 INCHES AND LARGER	–	X	–	1707.7.1
5) TANKS, HEAT EXCHANGERS AND PRESSURE VESSELS	–	X	–	1707.7.1

NOT FOR CONSTRUCTION
BACKCHECK

US ARMY CORPS OF ENGINEERS
ALASKA DISTRICT

CONTRACT NO. ___
CONTRACTOR ___
CITY ___ STATE ___
PRIME CONTRACTOR ___
Recommended: ___
RESIDENT ENGINEER ___
Approved: ___
Date: ___

Symb	Action	Description	Date	Appvd

U.S. ARMY ENGINEER DISTRICT
CORPS OF ENGINEERS
ANCHORAGE, ALASKA

Designed: SMH
Drawn: SMH
Reviewed: P. Lam
Chief - Section
Submitted: D. Frenter
Chief - Branch
Date: 16 JULY 2009
Dwg Scale: AS NOTED
Plot Scale: 1:2
File: FTW336A-042-S0-2
Drawing # F-211-13-01

DACA85-09-B-0007
INV. NO. W911KB-09-R-0007
PN 65076
FTW336A

FT. WAINWRIGHT, ALASKA
AIRCRAFT PARTS STORAGE
STRUCTURAL
GENERAL
GENERAL NOTES AND ABBREVIATIONS 2

Reference number:
S0.2

Drawing x:\UNIFIED\EN-TE\Jobs\FTW336A\Dwgs\FTW336A-042-S0-2.dwg last saved on 6/22/2009 2:37 PM was plotted by Curfew, Donald L POA on 7/17/2009 6:39 AM

TABLE 1 – SPECIAL INSPECTION SCHEDULE

REQUIRED VERIFICATION & INSPECTION OF STEEL CONSTRUCTION

VERIFICATION & INSPECTION	CONTINUOUS	PERIODIC	REFERENCED STANDARD[a]	IBC REFERENCE
1. MATERIAL VERIFICATION OF HIGH–STRENGTH BOLTS, NUTS AND WASHERS:				
A. IDENTIFICATION MARKINGS TO CONFORM TO ASTM STANDARDS SPECIFIED IN THE APPROVED CONSTRUCTION DOCUMENTS	–	X	APPLICABLE ASTM MATERIAL SPECIFICATIONS; AISC LRFD, SECTION A3.3	–
B. MANUFACTURER'S CERTIFICATE OF COMPLIANCE REQUIRED	–	X	–	–
2. INSPECTION OF HIGH–STRENGTH BOLTING:				
A. BEARING–TYPE CONNECTIONS	–	X	AISC LRFD SECTION M2.5	1704.3.3
B. SLIP–CRITICAL / FULLY PRETENSIONED BOLTS	–	X		
3. MATERIAL VERIFICATION OF STRUCTURAL STEEL:				
A. IDENTIFICATION MARKINGS TO CONFORM TO ASTM STANDARDS SPECIFIED IN THE APPROVED CONSTRUCTION DOCUMENTS	–	X	ASTM A 6	1708.4
B. MANUFACTURER'S CERTIFIED MILL TEST REPORTS	–	X	ASTM A 6	
4. MATERIAL VERIFICATION OF WELD FILLER MATERIALS:				
A. IDENTIFICATION MARKINGS TO CONFORM TO AWS SPECIFICATION IN THE APPROVED CONSTRUCTION DOCUMENTS	–	X	AISC LRFD, SECTION A3.5	–
B. MANUFACTURER'S CERTIFICATE OF COMPLIANCE REQUIRED	–	X	–	–
5. INSPECTION OF WELDING:				
A. STRUCTURAL STEEL				
1) COMPLETE & PARTIAL PENETRATION GROOVE WELDS	X	–	AWS D1.1	1704.3.1
2) MULTIPASS FILLET WELDS	X	–		
3) SINGLE–PASS FILLET WELDS > 5/16"	X	–		
4) SINGLE–PASS FILLET WELDS ≤ 5/16"	–	X		
5) FLOOR AND DECK WELDS	–	X	AWS D1.3	–
B. REINFORCING STEEL:				
1) VERIFICATION OF WELDABILITY OF REINFORCING STEEL OTHER THAN ASTM A 706	–	X	AWS D1.4, ACI 318: 3.5.2	1903.5.2
2) REINFORCING STEEL–RESISTING FLEXURAL AND AXIAL FORCES IN INTERMEDIATE ADN SPECIAL MOMENT FRAMES, AND BOUNDARY ELEMENTS OF SPECIAL REINFORCED CONCRETE SHEAR WALLS AND SHEAR REINFORCEMENT	X	–		
3) SHEAR REINFORCEMENT	x	–		
4) OTHER REINFORCING STEEL	–	X		
C. OTHER STEEL				
1) STAIRS AND RAILING SYSTEMS	–	X	AWS D1.1	1704.3
6. INSPECTION OF STEEL FRAME JOINT DETAILS FOR COMPLIANCE WITH APPROVED CONSTRUCTION DOCUMENTS:				
A. DETAILS SUCH AS BRACING AND STIFFENING	–	X	–	1704.3.2
B. MEMBER LOCATIONS	–	X		
C. APPLICATION OF JOINT DETAILS AT EACH CONNECTION	–	X		

a. WHERE APPLICABLE SEE TABLE 4 SHEET S0.2 & IBC SECTION 1707, SPECIAL INSPECTION FOR SEISMIC RESISTANCE.

TABLE 2 – SPECIAL INSPECTION SCHEDULE

REQUIRED VERIFICATION & INSPECTION OF CONCRETE CONSTRUCTION

VERIFICATION & INSPECTION	CONTINUOUS	PERIODIC	REFERENCED STANDARD[a]	IBC REFERENCE
1. INSPECTION OF REINFORCING STEEL, INCLUDING PRESTRESSING TENDONS, AND PLACEMENT	–	X	ACI 318: 3.5, 7.1–7.7	1903.5, 1907.1, 1907.7
2. INSPECTION OF REINFORCING STEEL WELDING IN ACCORDANCE WITH TABLE 1, ITEM 5B	–	X	AWS D1.4 ACI 318: 3.5.2	1903.5.2
3. INSPECT BOLTS TO BE INSTALLED IN CONCRETE PRIOR TO AND DURING PLACEMENT OF CONCRETE WHERE ALLOWABLE LOADS HAVE BEEN INCREASED	X	–	–	1912.5
4. VERIFYING USE OF REQUIRED DESIGN MIX	–	X	ACI 318: CH.4, 5.2–5.4	1904, 1905.2–1905.4
5. AT THE TIME FRESH CONCRETE IS SAMPLED TO FABRICATE SPECIMENS FOR STRENGTH TESTS, PERFORM SLUMP AND AIR CONTENT TESTS, AND DETERMINE THE TEMPERATURE OF THE CONCRETE	X	–	ASTM C 172, ASTM C 31, ACI 318: 5.6, 5.8	1905.6
6. INSPECTION OF CONCRETE PLACEMENT FOR PROPER APPLICATION	X	–	ACI 318: 5.9, 5.10	1905.9, 1905.10
7. INSPECTION FOR MAINTENANCE OF SPECIFIED CURING TEMPERATURE AND TECHNIQUES	–	X	ACI 318: 5.11–5.13	1905.11, 1905.13

a. WHERE APPLICABLE SEE TABLE 4 SHEET S0.2 & IBC SECTION 1707, SPECIAL INSPECTION FOR SEISMIC RESISTANCE.

TABLE 3 – SPECIAL INSPECTION SCHEDULE

REQUIRED VERIFICATION & INSPECTION OF MASONRY CONSTRUCTION

VERIFICATION & INSPECTION	CONTINUOUS	PERIODIC	IBC SECTION	ACI 530	ACI 530.1
1. AS MASONRY CONSTRUCTION BEGINS, THE FOLLOWING SHALL BE VERIFIED TO ENSURE COMPLIANCE.					
A. PROPORTIONS OF SITE PREPARED MORTAR.	–	X	–	–	Art. 2.6A
B. CONSTRUCTION OF MORTAR JOINTS.	–	X	–	–	Art. 3.3B
C. LOCATION OF REINFORCEMENT.	–	X	–	–	Art. 3.4
2. THE INSPECTION PROGRAM SHALL VERIFY:					
A. THE SIZE AND LOCATION OF STRUCTURAL ELEMENTS.	–	X	–	–	Art. 3.3G
B. TYPE SIZE AND LOCATION OF ANCHORS TO MASONRY .	–	X	–	SEC 1.2.2(E), 2.1.4, 3.1.6	–
C. SPECIFIED SIZE, GRADE & TYPE OF REINFORCEMENT.	–	X	–	SEC 1.13	Art. 2.4, 3.4
D. WELDING OF REINFORCING BARS	X	–	–	SEC 2.1.10.7.2, 3.3.3.4(B)	–
E. PROTECTION FROM COLD WEATHER (TEMP<40 °) & HOT WEATHER (TEMPERATURE>90°)	–	X	SEC 2104.3, 2104.4	SEC 2.1.10.7.2, 3.3.3.4(B)	–
3. PRIOR TO GROUTING, THE FOLLOWING SHALL BE VERIFIED TO ENSURE COMPLIANCE:					
A. GROUT SPACE IS CLEAN.	–	X	–	–	Art. 3.3D
B. PLACEMENT OF REINFORCEMENT AND CONNECTORS.	–	X	–	SEC 1.13	Art. 3.4
C. PROPORTIONS OF SITE PREPARED GROUT.	–	X	–	–	Art. 2.6B
D. CONSTRUCTION OF MORTAR JOINTS	–	X	–	–	Art. 3.3B
4. GROUT PLACEMENT SHALL BE VERIFIED TO ENSURE COMPLIANCE WITH CODE AND CONSTRUCTION DOCUMENT PROVISIONS.					
	X	–	–	–	Art. 3.5
5. PREPARATION OF ANY REQUIRED GROUT SPECIMENS, MORTAR SPECIMENS AND/OR PRISMS SHALL BE OBSERVED.					
	X	–	SEC 2105.2.2, 2105.3	–	Art. 1.4
6. COMPLIANCE WITH REQUIRED INSPECTION PROVISIONS OF THE PLANS AND SPECIFICATION AND APPROVED SUBMITTALS SHALL BE VERIFIED.					
	–	X	–	–	Art. 1.5

a. WHERE APPLICABLE SEE TABLE 4 SHEET S0.2 & IBC SECTION 1707, SPECIAL INSPECTION FOR SEISMIC RESISTANCE.

NOT FOR CONSTRUCTION
BACKCHECK

US ARMY CORPS OF ENGINEERS
ALASKA DISTRICT

CONTRACT NO. ___
CONTRACTOR ___
CITY ___ STATE ___
PRIME CONTRACTOR ___ Recommended: ___
RESIDENT ENGINEER ___ Approved: ___ Date: ___

Symb	Action	Description	Date	Appvd

U.S. ARMY ENGINEER DISTRICT
CORPS OF ENGINEERS
ANCHORAGE, ALASKA

Designed: SMH
Drawn: SMH
Reviewed: P. Lorn
Chief — CEPOA-EN-TE-SAK — Section
Submitted: D. Trenter
Chief — CEPOA-EN-CW-ET — Branch
Date: 16 JULY 2009
Dwg Scale: AS NOTED
Plot Scale: 1:2
File: FTW336A-043-S0-3
Drawing #: F-211-13-01

INV. NO. W911KB-09-R-0007
PN 65076 FTW336A

FT. WAINWRIGHT, ALASKA
AIRCRAFT PARTS STORAGE
STRUCTURAL
GENERAL
SPECIAL INSPECTION SCHEDULE

Reference number:
S0.3

Drawing x:\UNIFIED\EN-TE\Jobs\FTW336A\Dwgs\FTW336A-043-S0-3.dwg last saved on 6/29/2009 7:18 AM was plotted by Curfew, Donald L POA on 7/17/2009 6:39 AM

FOUNDATION SCHEDULE

FOOTING TYPE	FOOTING DIMENSIONS B (FT) SHORT DIMENSION	L (FT) LONG DIMENSION	T (IN) TOTAL THICKNESS	BOTTOM OF FOOTING REINFORCING LONG DIRECTION BARS	SHORT DIRECTION BARS OVER WIDTH =B
F5	5'	5'	12"	6 – #5	6 – #5
F6 (NOTE 2)	6'	6'	16"	7 – #5	7 – #5
F7 (NOTE 2)	7'	7'	16"	8 – #5	8 – #5
F8 (NOTE 2)	8'	8'	24"	9 – #5	9 – #5
F9 (NOTE 2)	9'	9'	24"	10 – #6	10 – #6
F10 (NOTE 2)	10'	10'	40"	14 – #6	14 – #6
F12 (NOTE 2)	12'	12'	44"	14 – #8	14 – #8
F16 (NOTE 2)	16'	16'	48"	20 – #8	20 – #8

NOTES:
1. SEE FOUNDATION DETAIL SHEET(S) FOR MORE INFORMATION. DISTRIBUTE REINFORCEMENT UNIFORMLY. PROVIDE 3" COVER FROM BOTTOM OF FOOTING.
2. INSTALL REINFORCING STEEL PER SCHEDULE IN BOTH TOP AND BOTTOM OF FOOTING. PROVIDE 2" COVER FROM TOP OF FOOTING.

EXTERIOR STUD SCHEDULE

LOCATION	STUD SIZE	SPACING (IN)	BOTTOM TRACK CONNECTION DETAIL	TOP TRACK CONNECTION DETAIL
GRID 1	800S200–54	16	9 / S6.01	12 / S4.02
GRID 6	800S200–54	16	9 / S6.01	12 / S4.02
GRID I ABOVE GIRT	800S200–54	12	9 / S6.01	1 / S4.04, 2 / S4.04
GRID I BELOW GIRT	800S200–54	16	9 / S6.01	3 / S6.01
GRID A ABOVE GIRT	800S200–54	16	9 / S6.01	1 / S4.04, 2 / S4.04
GRID A BELOW GIRT	800S200–54	16	9 / S6.01	3 / S6.01
ENTRY	800S200–54	16	9 / S6.01	3 / S6.01

NOTES:
1) FOR "ZONE" LOCATIONS SEE COMPONENTS AND CLADDING WIND PRESSURE DIAGRAM ON SHEET S.06.
2) TYPICAL BASE TRACK IS 800T150–68. TYPICAL TOP TRACK IS 800T150–43.
3) WHERE SPECIFIC DETAIL IS GIVEN USE CONNECTIONS SHOWN ON THE DETAIL.

PARTITION GWB SHEAR WALL SCHEDULE

MARK	GWB	NO. 6 SCREW EDGE PATTERN INCH O.C.	NO. 6 SCREW FIELD PATTERN INCH O.C.
4U	SINGLE SIDE UNBLOCKED	4 INCH OC	4 INCH OC
4B	SINGLE SIDE BLOCKED	4 INCH OC	4 INCH OC
77B	BOTH SIDES BLOCKED	7 INCH OC	7 INCH OC
44U	BOTH SIDES UNBLOCKED	4 INCH OC	4 INCH OC
44B	BOTH SIDES BLOCKED	4 INCH OC	4 INCH OC

NOTES:
1) GWB=GYPSUM WALL BOARD – TYPE AND THICKNESS PER ARCHITECTURAL PLANS. USE NO. 6 [MIN] SELF TAPPING SCREWS GYPSUM WALL BOARD SCREWS.
2) SHEAR WALL GYPSUM WALL BOARD IS CONTINUOUS FROM TOP TRACK/UNDERSIDE OF CEILING JOIST TO BOTTOM TRACK.
3) FOR INTERIOR PARTITIONS WITH SINGLE SIDED SHEAR WALL SCREW PATTERN THE PATTERN MAY BE INSTALLED ON EITHER WALL FACE.
4) 43 MIL [MIN,] STUD BEHIND ALL VERTICAL GWB JOINTS & EDGES.
5) BLOCKING=CONTINUOUS 43 MILX2" SHEET BEHIND HORIZONTAL GWB JOINTS INSTALLED FOR "BLOCKED" PATTERNS.

NOT FOR CONSTRUCTION
BACKCHECK

US ARMY CORPS OF ENGINEERS
ALASKA DISTRICT

CONTRACT NO. ___
CONTRACTOR ___
CITY ___ STATE ___
PRIME CONTRACTOR ___ Recommended: ___
RESIDENT ENGINEER ___ Approved: ___ Date: ___

Dwg Action	Description	Date	Appvd

U.S. ARMY ENGINEER DISTRICT
CORPS OF ENGINEERS
ANCHORAGE, ALASKA

Designed: SMH
Drawn: SMH
Reviewed: P. Lam
Chief — CEPOA-TS-TE-SA — Section
Submitted: D. Frenier
Chief — CEPOA-TS-TE — Branch
Date: 16 JULY 2009
Dwg Scale: AS NOTED
Plot Scale: 1:2
File: FTW336A-044-S0-4
Drawing No. H-F-211-13-01
INV. NO. W911KB-09-R-0007
PN 65076
FTW336A

FT. WAINWRIGHT, ALASKA
AIRCRAFT PARTS STORAGE
STRUCTURAL
GENERAL
STRUCTURAL SCHEDULES

Reference number:
S0.4

Drawing x:\UNIFIED\EN-TE\Jobs\FTW336A\Dwgs\FTW336A-044-S0-4.dwg last saved on 6/26/2009 10:05 AM was plotted by Curfew, Donald L POA on 7/17/2009 6:39 AM

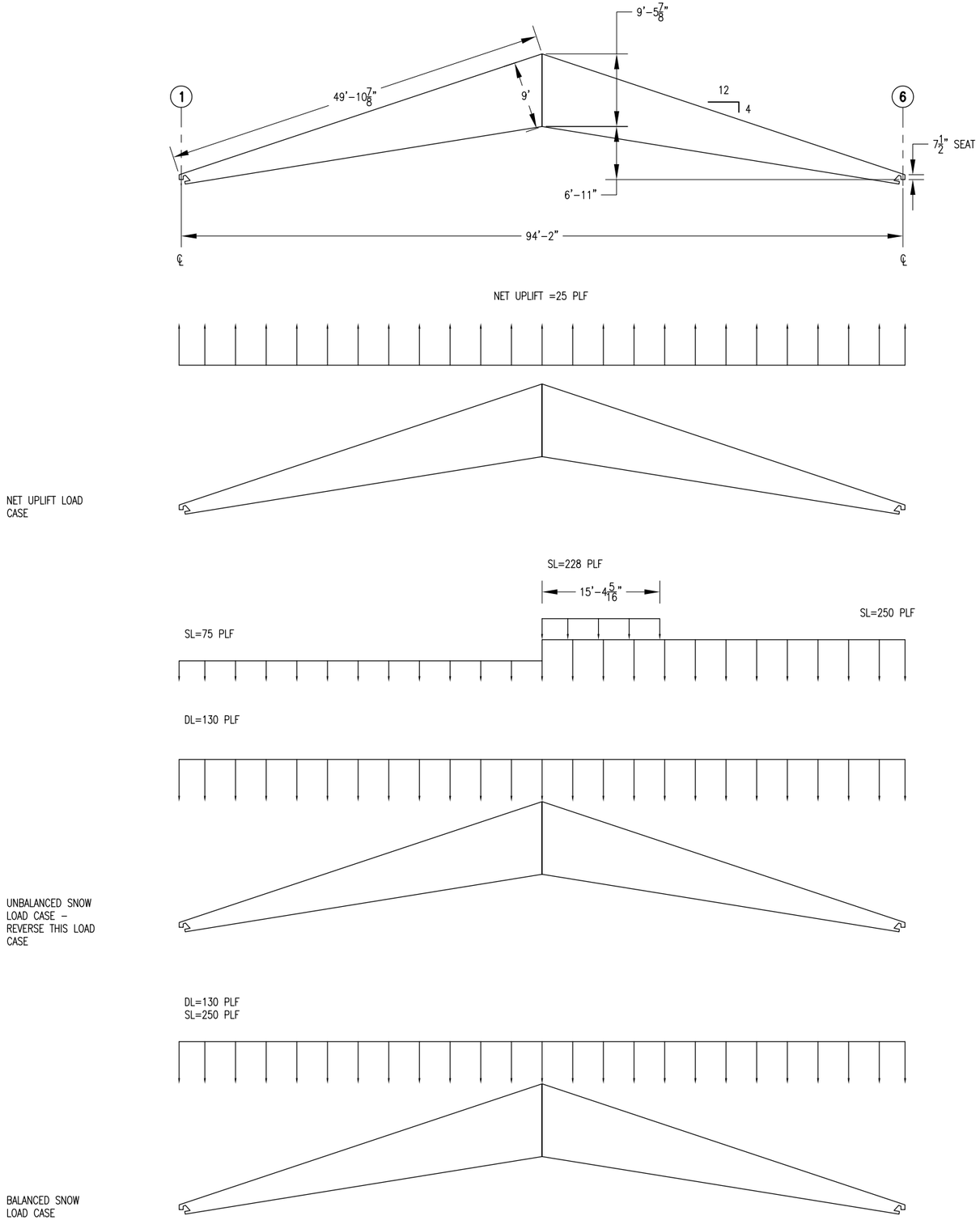

1 S0.5 S0.5 SCISSOR LH JOIST LOADING
SCALE: 1/8" = 1'-0"

NOTES:
L/360 SNOW LOAD DEFLECTION
L/240 TOTAL LOAD DEFLECTION

LOADS SHOWN DO NOT INCLUDE JOIST SELF WEIGHT. JOISTS HAVE A 22 PLF BOTTOM CHORD DEAD LOAD IN ADDITION TO LOADS SHOWN [EXCEPT FOR NET UPLIFT LOAD CASE]. JOISTS SHALL BE DESIGNED FOR A 120 LB HORIZONTAL WORKING STRESS SEISMIC LOAD EITHER DIRECTION AT PANEL POINTS. SUPPLIER SHALL DESIGN HORIZONTAL CROSS BRIDGING TO TRANSMIT THIS SEISMIC LOAD TO THE JOIST TOP CHORDS WHICH TRANSMITS FORCE TO THE ROOF DECK THROUGH PUDDLE WELDS.

JOIST SEATS SHALL BE WELDED TO SUPPORTS. 6" BEARING LENGTH TYPICAL. MAXIMUM JOIST SEAT WIDTH 10" TYPICAL. LIMIT OVERALL JOIST DEPTH TO 18" ON SHALLOW END.

CROSS BRIDGING SHALL BE DESIGNED AND SUPPLIED BY THE JOIST MANUFACTURER.

JOISTS SHALL BE DESIGNED CONSIDERING SUPPORTS RESTRAINED HORIZONTALLY FOR THE DEAD+SNOW LOAD COMBINATION. PROVIDE JOISTS THAT LIMIT TOTAL LOAD THRUST TO 50 KIPS.

JOISTS SHALL BE DESIGNED CONSIDERING SUPPORTS UNRESTRAINED HORIZONTALLY FOR THE FULL DEAD+SNOW LOAD COMBINATION LIMITING TOTAL HORIZONTAL DEFLECTION TO 7/8".

JOISTS SHALL BE DESIGNED CONSIDERING SUPPORTS UNRESTRAINED HORIZONTALLY FOR NET WIND UPLIFT.

JOIST MANUFACTURER SHALL PROVIDE JOISTS WITH WEBS THAT FIT ON A C12X30 LAID FLAT & CENTERED UNDER THE SEAT WITHOUT INTERSECTING THE JOIST WEBS.

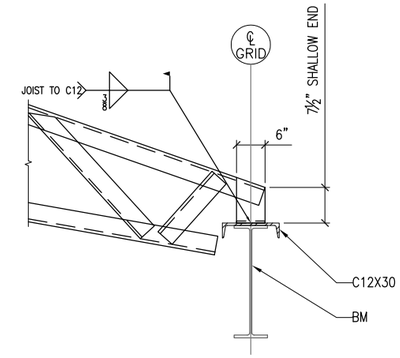

2 S0.5 S0.5 TYPICAL SCISSOR LH JOIST SEAT @ BEAM
SCALE: 3/4" = 1'-0"

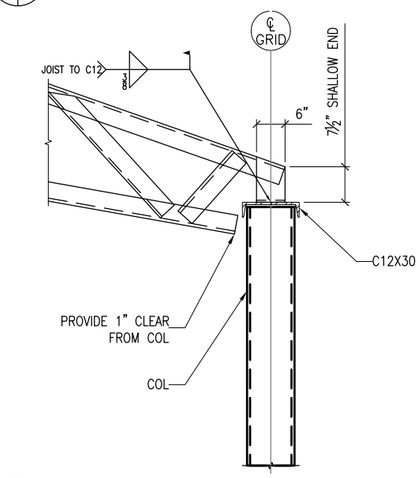

3 S0.5 S0.5 TYPICAL SCISSOR LH JOIST SEAT @ COL
SCALE: 3/4" = 1'-0"

US ARMY CORPS OF ENGINEERS
ALASKA DISTRICT

CONTRACT NO. _____
CONTRACTOR _____
CITY _____ STATE _____
PRIME CONTRACTOR Recommended: _____
RESIDENT ENGINEER Approved: _____ Date: _____

Num	Action	Description	Date	Appvd

U.S. ARMY ENGINEER DISTRICT
CORPS OF ENGINEERS
ANCHORAGE, ALASKA

Designed: SMH
Drawn: SMH
Reviewed: P. Lum
Chief — CEPOA-EC-TE-SA — Section
Submitted: D. Frenier
Chief — CEPOA-EC-TE — Branch
Date: 16 JULY 2009
Dwg Scale: AS NOTED
Plot Scale: 1:2
File: FTW336A-045-S0-5
Drawing # F-211-13-01

PN 65076
INV. NO. W911KB-09-R-0007
FTW336A

FT. WAINWRIGHT, ALASKA
AIRCRAFT PARTS STORAGE
STRUCTURAL
GENERAL
JOIST LOADING DIAGRAMS

Reference number:
S0.5
Sheet 45 of 118

NOT FOR CONSTRUCTION
BACKCHECK

Drawing x:\UNIFIED\EN-TE\Jobs\FTW336A\Dwgs\FTW336A-045-S0-5.dwg last saved on 6/29/2009 7:18 AM was plotted by Curfew, Donald L POA on 7/17/2009 6:39 AM

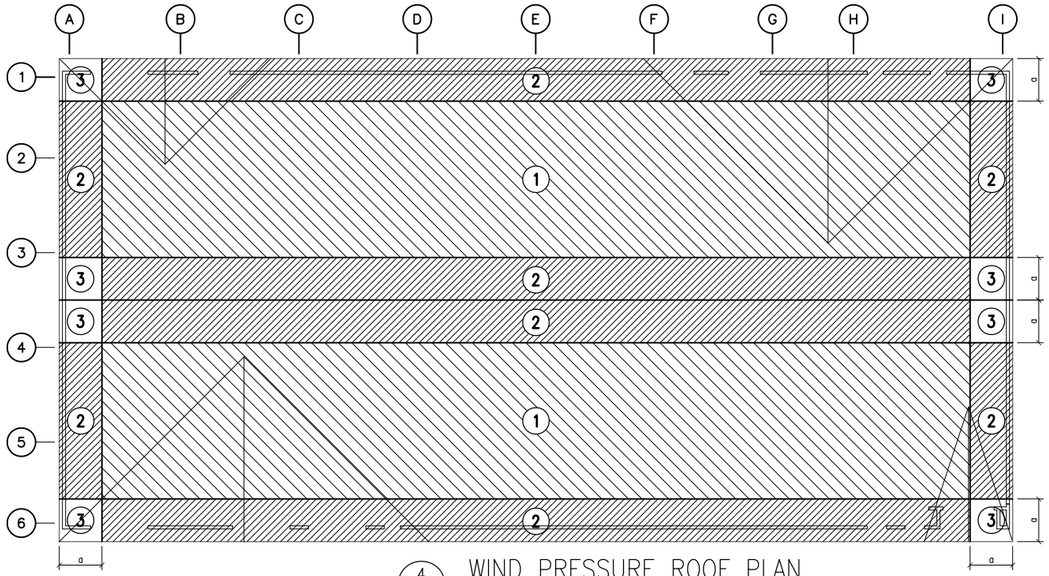

4 S0.6|S0.6 WIND PRESSURE ROOF PLAN

SCALE: 1/16"=1'-0"

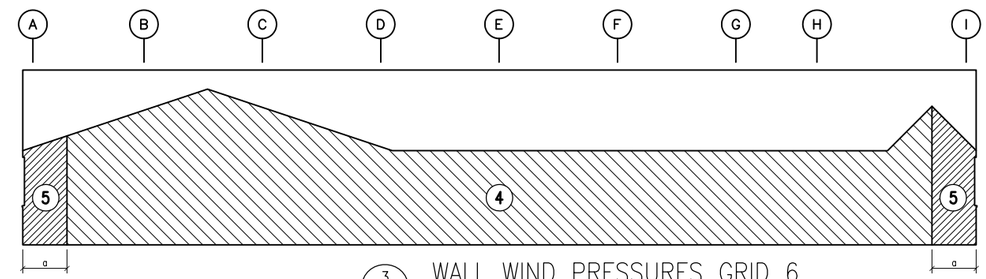

3 S0.6|S0.6 WALL WIND PRESSURES GRID 6

SCALE: 1/16"=1'-0"

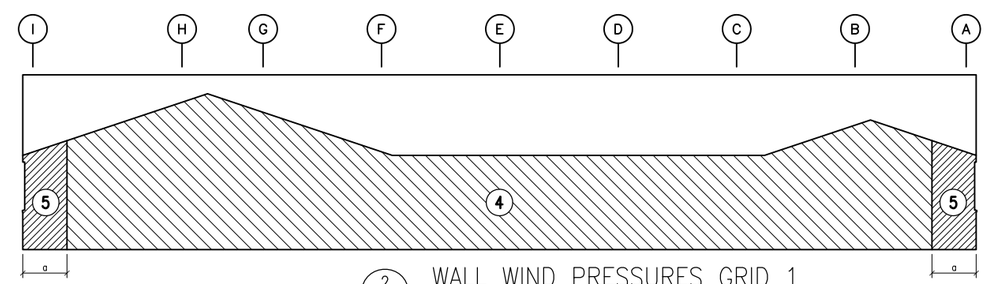

2 S0.6|S0.6 WALL WIND PRESSURES GRID 1

SCALE: 1/16"=1'-0"

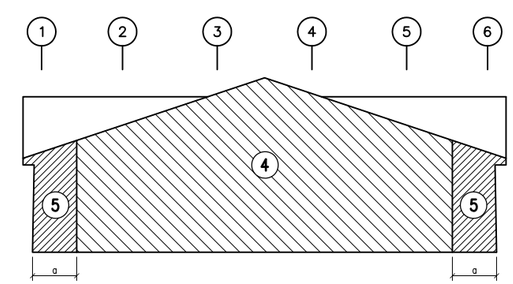

1 S0.6|S0.6 WALL WIND PRESSURES GRID A & GRID I

SCALE: 1/16"=1'-0"

SHEET NOTES:

1. WIND PRESSURES ARE GROSS IS BASED ON THE 2006 INTERNATIONAL BUILDING CODE CHAPTER 16. INCREASE WIND PRESSURE BY ω=1.3 WHEN IBC ALTERNATIVE ALLOWABLE STRESS DESIGN LOAD COMBINATIONS ARE USED. MEAN ROOF HEIGHT AT CENTER OF BUILDING IS 30 FT, MEAN ROOF HEIGHT AT WINGS IS 30 FT, SLOPE 4:12. SEE NOTES ON S.01 FOR ADDITIONAL DESIGN CRITERIA.

2. ALL WIND PRESSURES ARE PERPENDICAULR TO THE BUILDING SURFACES

3. TABULATED VALUES ARE SHOWN WITH + AND − TO SIGNIFY FORCE DIRECTION:
   (−) OUTWARD PRESSURE
   (+) INWARD PRESSURE

4. a = 9 FT. ROOF OVERHANG PRESSURES OCCUR FROM PERIMETER BEAM CENTERLINE TO EDGE OF ROOF.

5. EFFECTIVE WIND AREA: THE EFFECTIVE WIND AREA FOR DETERMINATION OF COMPONENT AND CLADDING WIND PRESSURES IS THE SPAN LENGTH MULTIPLIED BY THE EFFECTIVE WIDTH THAT SHALL NOT BE LESS THAN ONE−THIRD THE SPAN LENGTH. FOR CLADDING FASTENERS, THE EFFECTIVE AREA SHALL NOT BE GREATER THAN THE AREA THEAT IS TRIBUTARY TO THE INDIVIDUAL FASTENER..

6. REFER TO TABLE FOR PRESSURE BASED ON TRIBUTARY AREA. COMPONENT ZONES ARE INDICATED BY:

COMPONENT AND CLADDING WIND PRESSURES

	EFFECTIVE WIND AREA (SQ FT)			
ZONE	10	20	50	100
1	−18.6 / 14.0	−18.2 / 14.0	−17.5 / 14.0	−16.9 / 14.0
2	−39.5 / 14.0	−35.8 / 14.0	−30.9 / 14.0	−27.3 / 14.0
3	−39.5 / 14.0	−35.8 / 14.0	−30.9 / 14.0	−27.3 / 14.0
4	−22.1 / 20.4	−21.1 / 19.5	−20.2 / 18.2	−19.0 / 17.4
5	−27.3 / 20.4	−25.5 / 19.5	−23.1 / 18.2	−21.1 / 17.4
OVERHANG	−64 / 14.0	−56.7 / 14.0	−47.04 / 14.0	−39.7 / 14.0

NOT FOR CONSTRUCTION

BACKCHECK

US ARMY CORPS OF ENGINEERS
ALASKA DISTRICT

CONTRACT NO. ___
CONTRACTOR ___
CITY ___ STATE ___
Recommended: ___ PRIME CONTRACTOR
Approved: ___ RESIDENT ENGINEER
Date: ___

Symb	Action	Description	Date	Appvd

U.S. ARMY ENGINEER DISTRICT
CORPS OF ENGINEERS
ANCHORAGE, ALASKA

Designed: SMH
Drawn: SMH
Reviewed: P. Lam
Chief — Grade-Fit-Size — Section
Submitted: D. Frenner
Chief — Foundation — Structure — Region
Date: 16 JULY 2009
Dwg Scale: AS NOTED
Plot Scale: 1:2
File: FTW336A-046-S0-6
Drawing #: F-211-13-01

INV. NO. W911KB-09-R-0007
PN 65076
FTW336A

FT. WAINWRIGHT, ALASKA
AIRCRAFT PARTS STORAGE
STRUCTURAL
GENERAL
WIND COMPONENTS AND CLADDING PRESSURES

Reference number:
S0.6

Drawing x:\UNIFIED\EN-TE\Jobs\FTW336A\Dwgs\FTW336A-046-S0-6.dwg last saved on 6/29/2009 7:18 AM was plotted by Curfew, Donald L POA on 7/17/2009 6:39 AM

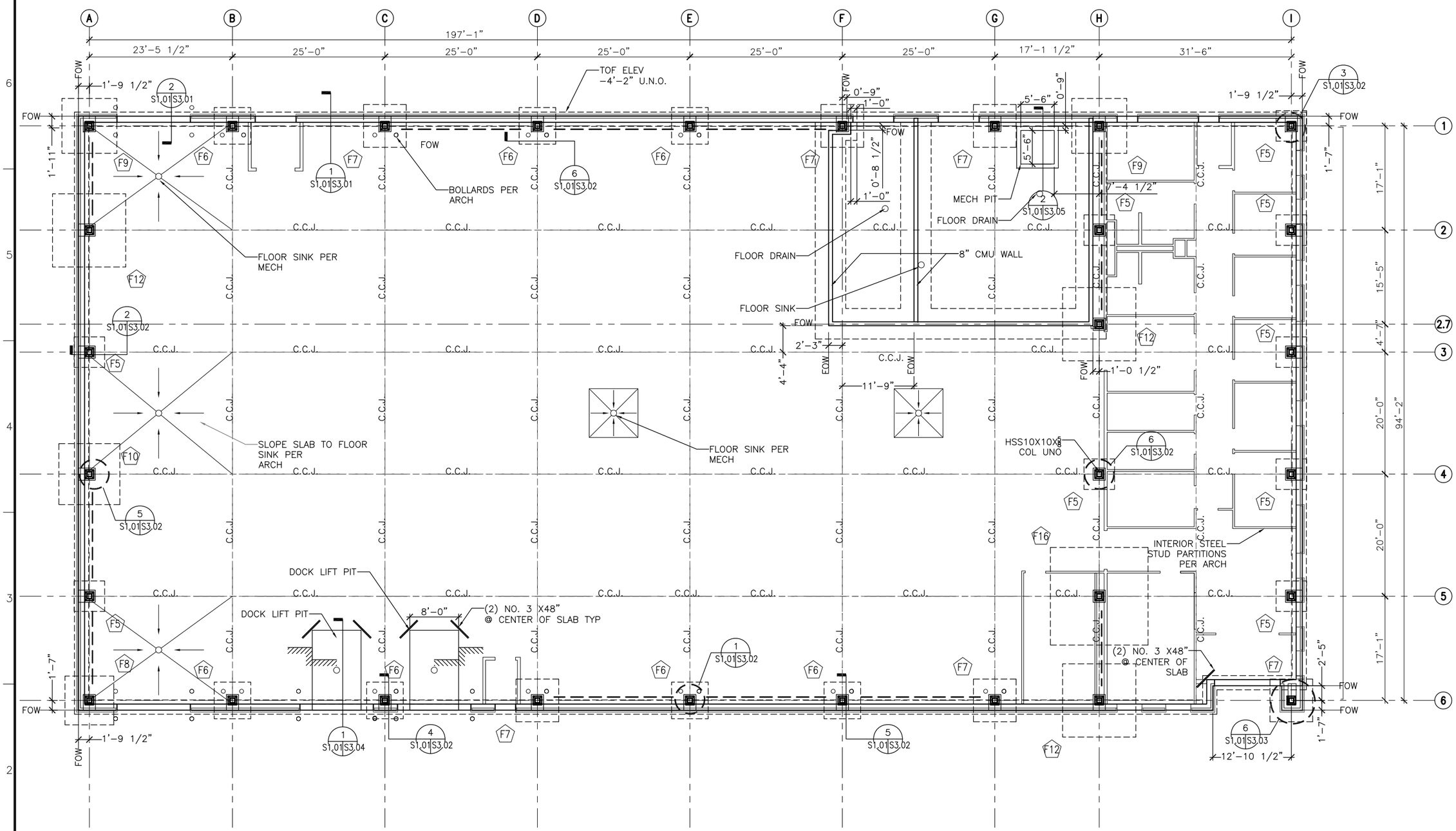

DENOTES HSS10X10X5/8 COL

DENOTES CONCENTRICALLY BRACED FRAME LOCATION

1 S1.01S1.01 FOUNDATION PLAN

SCALE: 1/8"=1'-0"

NOTES:

1. TOP OF SLAB-ON-GRADE ELEVATION 0'-0" U.N.O.
2. TOP OF PEDESTAL ELEVATION -8" U.N.O..
3. TOP OF EXTERIOR FOUNDATION WALL -8" U.N.O.
4. TOP OF INTERIOR/EXTERIOR FOOTING ELEVATION -50" U.N.O..
5. SEE FOOTING SCHEDULE ON SHEET S0.4.
6. TOTAL 8" SLAB-ON-GRADE THICKNESS ON 2" SAND 95% COMPACT ON INSULATION PER MECHANICAL PLANS. REINFORCE WITH NO. 5 @ 12" OC EA. WAY W/ 2.5" COVER FROM TOP. f'c=4000 psi. NO ENTRAINED AIR IN POWER TROWELED SLAB-ON-GRADE. PROTECT SLAB-ON-GRADE FROM FREEZE-THAW AFTER INSTALLATION.
7. FLOOR DRAIN LOCATIONS PER PLUMBING PLANS. HOUSE KEEPING PAD LOCATIONS PER MECHANICAL PLANS. SLOPE SLAB PER ARCHITECTURAL PLANS.
8. VERIFY AND COORDINATE DOCK LIFT PIT DIMENSIONS WITH DOCK LIFT MANUFACTURER.

NOT FOR CONSTRUCTION

BACKCHECK

US ARMY CORPS OF ENGINEERS
ALASKA DISTRICT

CONTRACT NO.
CONTRACTOR
CITY
STATE
PRIME CONTRACTOR
Recommended:
Approved:
RESIDENT ENGINEER
Date:

Grid	Action	Description	Date	Appvd

U.S. ARMY ENGINEER DISTRICT
CORPS OF ENGINEERS
ANCHORAGE, ALASKA

Designed: SMH
Drawn: SMH
Reviewed: P. Lam
Chief: CEPOA-EN-TE-SA
Submitted: D. Frenier
Chief: CEPOA-EN-TE-SA
Date: 16 JULY 2009
Dwg Scale: AS NOTED
Plot Scale: 1:2
File: FTW336A-047-S1-01
Drawing No.: F-211-13-01

INV. NO. W911KB-09-R-0007
PN 65076
FTW336A

FT. WAINWRIGHT, ALASKA
AIRCRAFT PARTS STORAGE
STRUCTURAL
PLANS
FOUNDATION PLAN

Reference number:
S1.01

Drawing x:\UNIFIED\EN-TE\Jobs\FTW336A\Dwgs\FTW336A-047-S1-01.dwg last saved on 7/1/2009 10:38 AM was plotted by Curfew, Donald L POA on 7/17/2009 6:39 AM

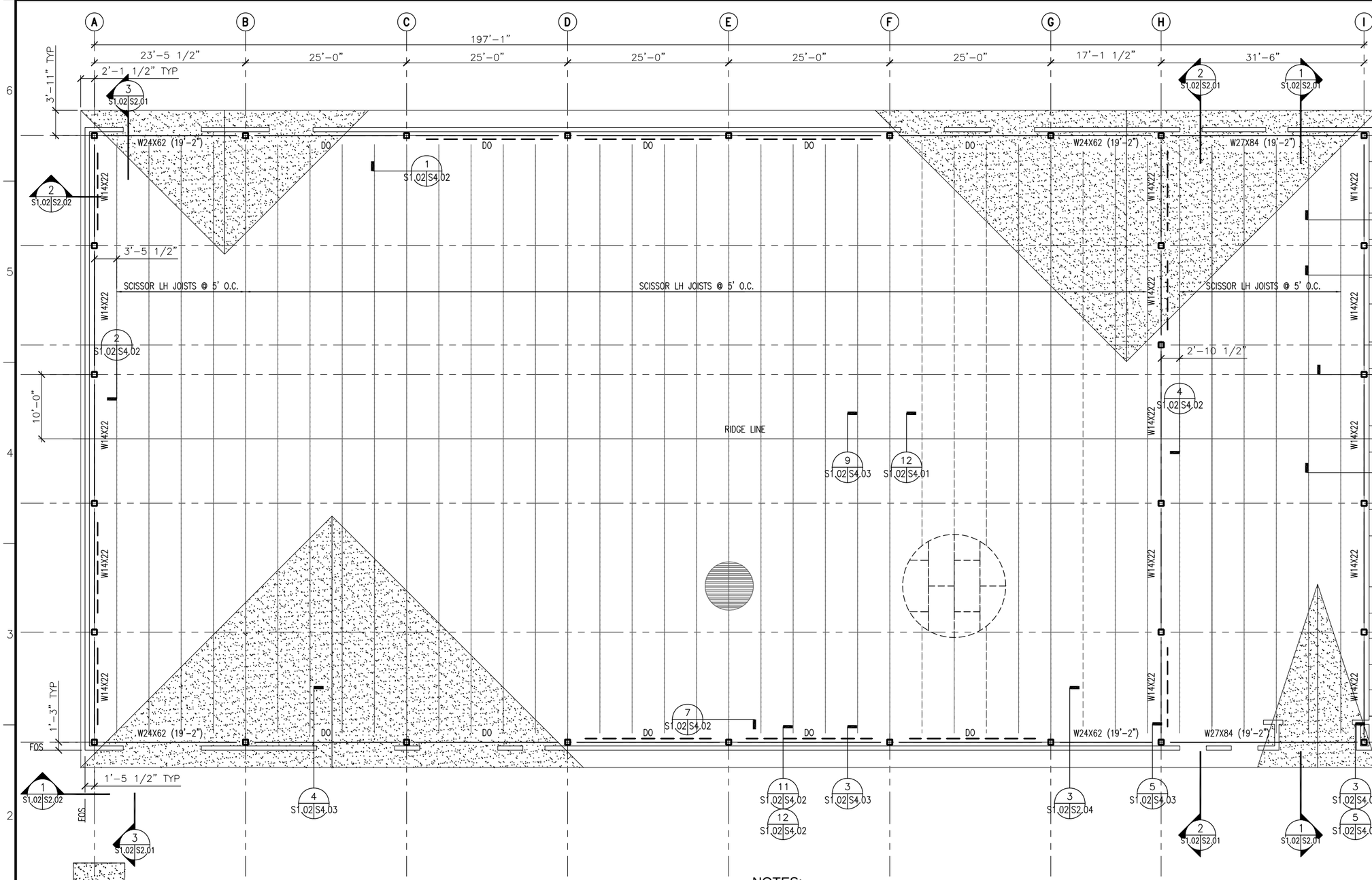

OVER FRAMING LOCATION

HSS10X10X⅜ COL

DENOTES CONCENTRICALLY BRACED FRAME LOCATION

DENOTES STEEL DECK SPAN

DENOTES TYPICAL SIP PANEL LAYOUT

1 S1.02 S1.02 ROOF FRAMING PLAN

SCALE: 1/8"=1'-0"

NOTES:

1. (X'-X") DENOTES TOP OF STEEL ELEVATION. TOP OF STEEL IS TOP OF FLAT C12x30 ON GRID 1 AND GRID 6.
2. REFERENCE TOP OF SLAB-ON-GRADE ELEVATION 0'-0".
3. COLUMNS SHOWN ON SHEET S1.01.
4. STEEL ROOF DECK PER 1/S4.01.
5. SEE SHEETS A1.04, A2.01 AND A2.02 FOR ROOF OVER FRAMING RIDGE DIMENSIONS, VALLEY DIMENSIONS AND SLOPE
6. USE JOIST MANUFACTURER APPROVED DETAIL TO SUSPEND SPRINKLER PIPES.

NOT FOR CONSTRUCTION

BACKCHECK

US ARMY CORPS OF ENGINEERS
ALASKA DISTRICT

CONTRACT NO. _____
CONTRACTOR _____
CITY _____ STATE _____
PRIME CONTRACTOR _____ Recommended: _____
RESIDENT ENGINEER _____ Approved: _____ Date: _____

Mod.	Action	Description	Date	Appvd

U.S. ARMY ENGINEER DISTRICT
CORPS OF ENGINEERS
ANCHORAGE, ALASKA

Designed: SMH
Drawn: SMH
Reviewed: P. Lam
Chief: ---
Submitted: D. Frenier
Date: 16 JULY 2009
Dwg Scale: AS NOTED
Plot Scale: 1:2
File: FTW336A-048-S1-02
Drawing No: F-211-13-01

INV. NO. W911KB-09-R-0007
PN 65076
FTW336A

FT. WAINWRIGHT, ALASKA
AIRCRAFT PARTS STORAGE
STRUCTURAL
PLANS
ROOF FRAMING PLAN

Reference number:
S1.02

Drawing x:\UNIFIED\EN-TE\Jobs\FTW336A\Dwgs\FTW336A-048-S1-02.dwg last saved on 6/25/2009 1:54 PM was plotted by Curfew, Donald L POA on 7/17/2009 6:40 AM

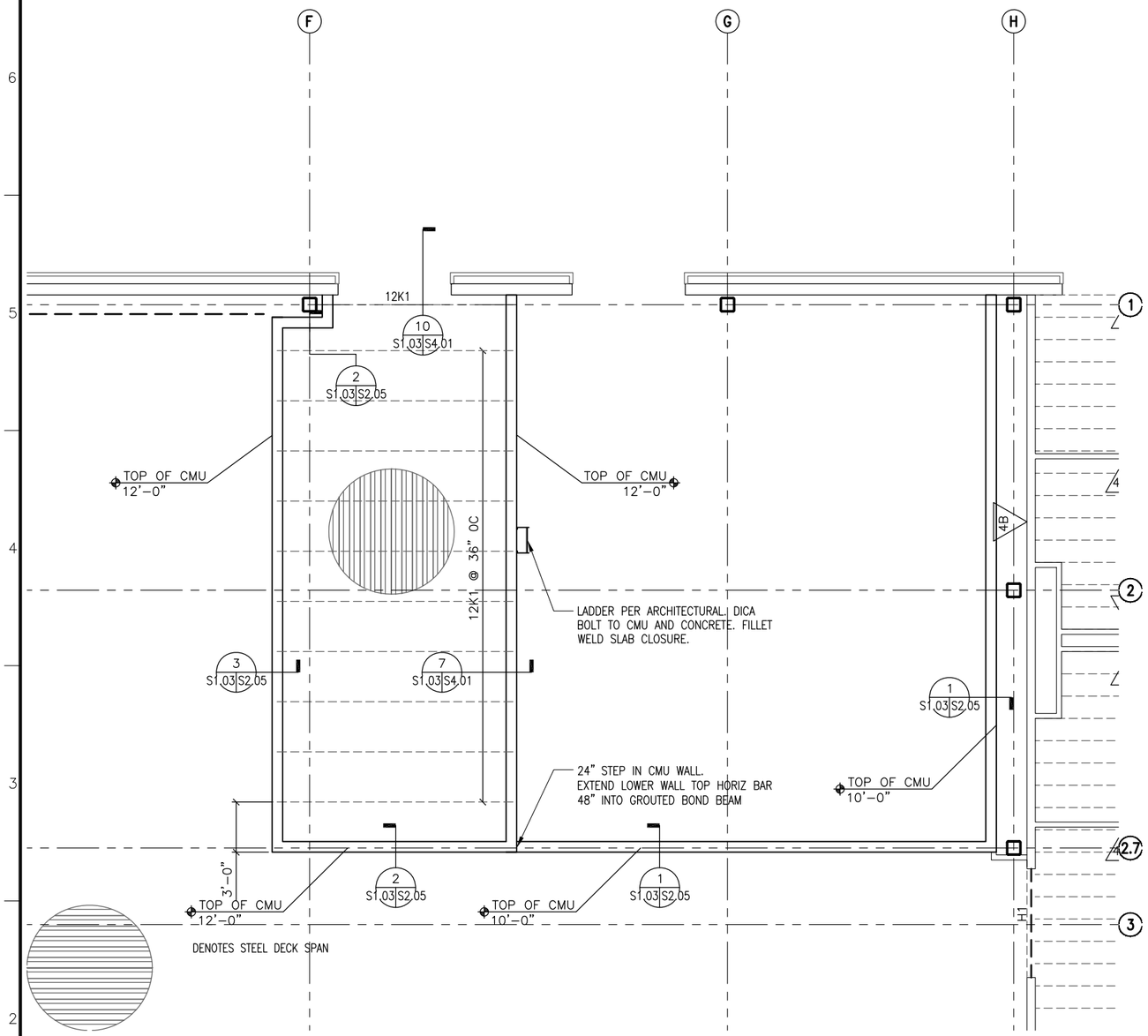

NOTES:

1. MEZZANINE FINISH FLOOR ELEVATION 12'-7".
2. REFERENCE TOP OF SLAB-ON-GRADE ELEVATION 0'-0".
3. COLUMNS AND DIMENSIONS SHOWN ON SHEET S1.01.
4. FLOOR SLAB PER 1/S4.01.

1 S1.03 S1.03 MEZZANINE FLOOR FRAMING PLAN

SCALE: 1/4"=1'-0"

NOT FOR CONSTRUCTION

BACKCHECK

US ARMY CORPS OF ENGINEERS
ALASKA DISTRICT

CONTRACT NO. _____
CONTRACTOR _____
CITY _____ STATE _____
PRIME CONTRACTOR _____
Recommended: _____
Approved: _____
RESIDENT ENGINEER _____
Date: _____

Symb	Action	Description	Date	Appvd

U.S. ARMY ENGINEER DISTRICT
CORPS OF ENGINEERS
ANCHORAGE, ALASKA

Designed: SMH
Drawn: SMH
Reviewed: P. Lam
Chief — CEPOA-EN-TE-SA — Section
Submitted: D. Frenier
Chief — CEPOA-EN-CW-ST — Branch
Date: 16 JULY 2009
Dwg Scale: AS NOTED
Plot Scale: 1:2
File: FTW336A-049-S1-03
Drawing No: R-F-211-13-01

INV. NO. W911KB-09-R-0007
PN 65076
FTW336A

FT. WAINWRIGHT, ALASKA
AIRCRAFT PARTS STORAGE
STRUCTURAL
PLANS
MEZZANINE FRAMING PLAN

Reference number:
S1.03

Drawing x:\UNIFIED\EN-TE\Jobs\FTW336A\Dwgs\FTW336A-049-S1-03.dwg last saved on 6/25/2009 1:56 PM was plotted by Curfew, Donald L POA on 7/17/2009 6:40 AM

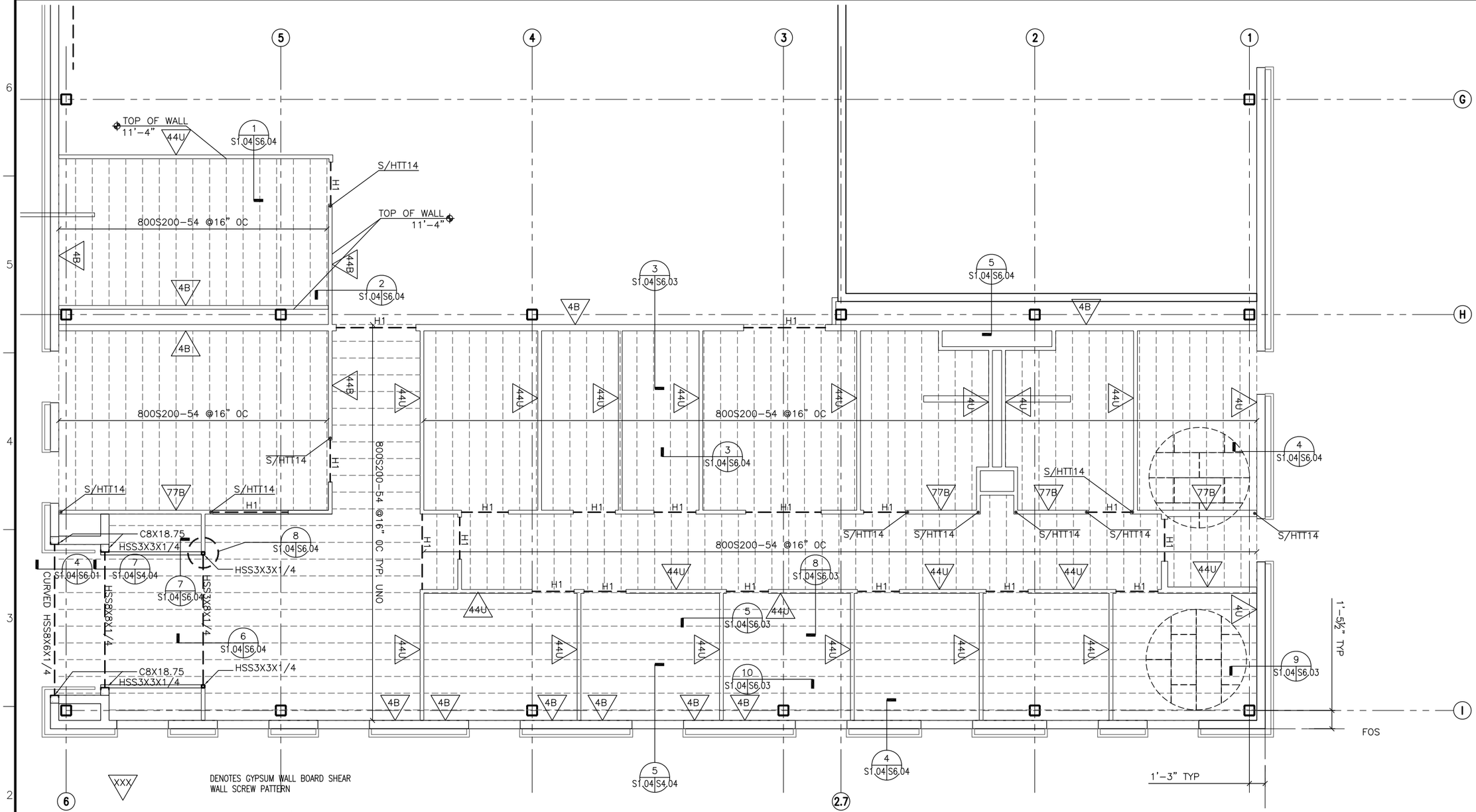

XXX — DENOTES GYPSUM WALL BOARD SHEAR WALL SCREW PATTERN

• — DENOTES SIMPSON S/HTT14 TIEDOWN ANCHOR OR APPROVED EQUIVALENT TO SLAB-ON-GRADE

□ — DENOTES TUBE STEEL COL

HSS4X8X1/4 — DENOTES TUBE STEEL HEADER

- - - - - — DENOTES FLOOR JOIST

H1 — DENOTES LAMINATED HEADER

DENOTES TYPICAL FORTA-CRETE PANEL LAYOUT

1 / S1.04 S1.04 OFFICE CEILING FRAMING PLAN

SCALE: 1/4"=1'-0"

NOTES:

1. TOP OF INTERIOR STUD WALL IS 12'-0" ABOVE FINISH FLOOR TYPICAL EXCEPT WHERE ARCHITECTURAL PLANS CALL FOR FULL HEIGHT WALLS. OR U.N.O. .
2. REFERENCE TOP OF SLAB-ON-GRADE ELEVATION 0'-0".
3. COLUMNS SHOWN ON SHEET S1.01.
4. H1 DENOTES LAMINATED STUD HEADER PER 9/S6.02 CONNECTED TO LAMINATED STUD JAMB POST PER 3/S6.02.
5. SEE PARTITION GYPSUM WALL BOARD SHEAR WALL SCHEDULE ON SHEET S0.4.
6. SIMPSON S/HTT14 OR APPROVED EQUIVALENT TIE DOWN ANCHORS ARE SHOWN AT THE BOTTOM OF THE PARTITIONS. EMBED ⅝" STEEL ROD 6" IN SIMPSON SET EPOXY OR APPROVED EQUIVALENT.

NOT FOR CONSTRUCTION

BACKCHECK

US ARMY CORPS OF ENGINEERS
ALASKA DISTRICT

CONTRACT NO. _____
CONTRACTOR _____
CITY _____ STATE _____
PRIME CONTRACTOR _____ Recommended: _____
RESIDENT ENGINEER _____ Approved: _____ Date: _____

Sym	Action	Description	Date	Appvd

U.S. ARMY ENGINEER DISTRICT
CORPS OF ENGINEERS
ANCHORAGE, ALASKA

Designed: SMH
Drawn: SMH
Reviewed: P. Lam
Submitted: D. Frenier
Chief - Section: D. Frenier
Date: 16 JULY 2009
Dwg Scale: AS NOTED
Plot Scale: 1:2
File: FTW336A-050-S1-04
Drawing #: F-211-13-01

INV. NO. W911KB-09-R-0007
PN 65076
FTW336A

FT. WAINWRIGHT, ALASKA
AIRCRAFT PARTS STORAGE
STRUCTURAL
PLANS
OFFICE CEILING FRAMING PLAN

Reference number:
S1.04

Drawing x:\UNIFIED\EN-TE\Jobs\FTW336A\Dwgs\FTW336A-050-S1-04.dwg last saved on 6/26/2009 11:09 AM was plotted by Curfew, Donald L POA on 7/17/2009 6:40 AM

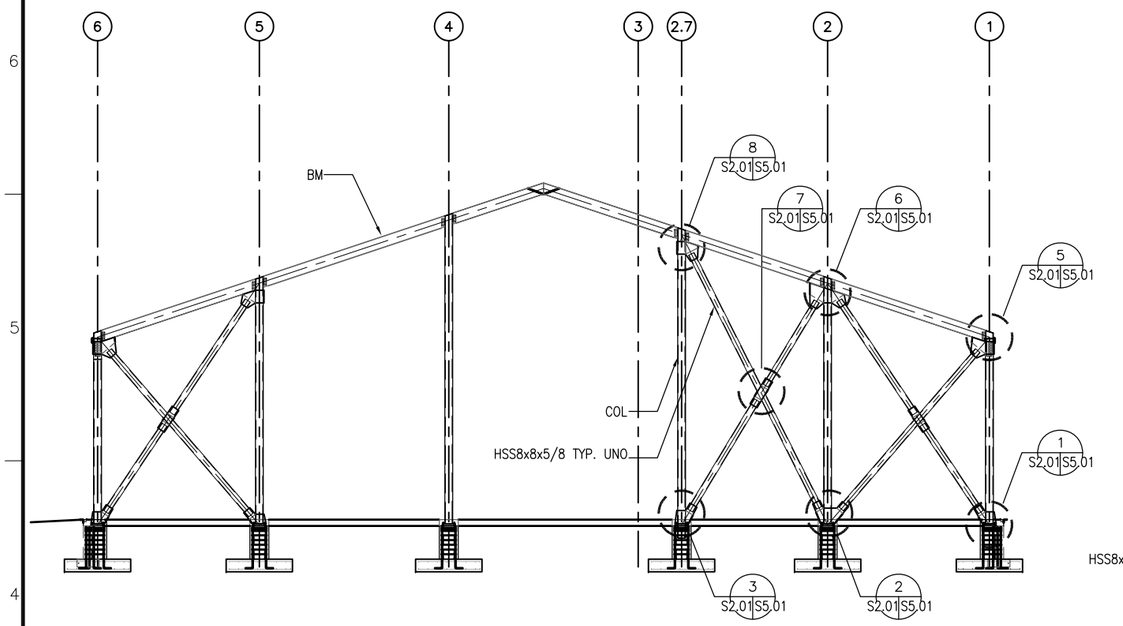

2 S1.02 S2.01 GRID H STEEL FRAME ELEVATION

SCALE: 1/8"=1'-0"

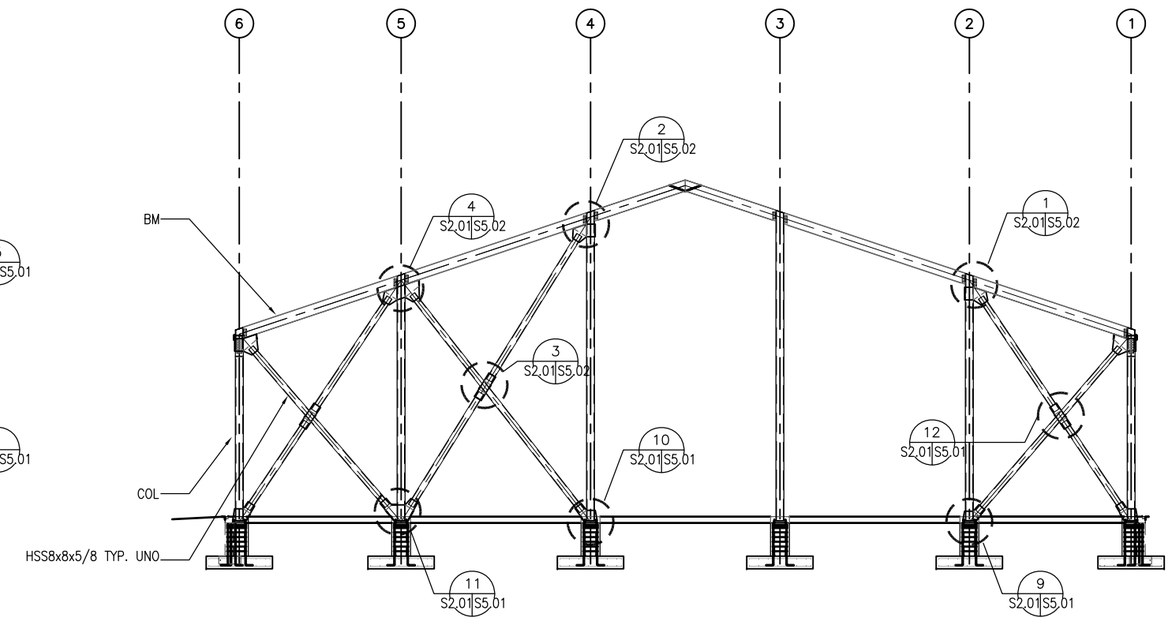

3 S1.02 S2.01 GRID A STEEL FRAME ELEVATION

SCALE: 1/8"=1'-0"

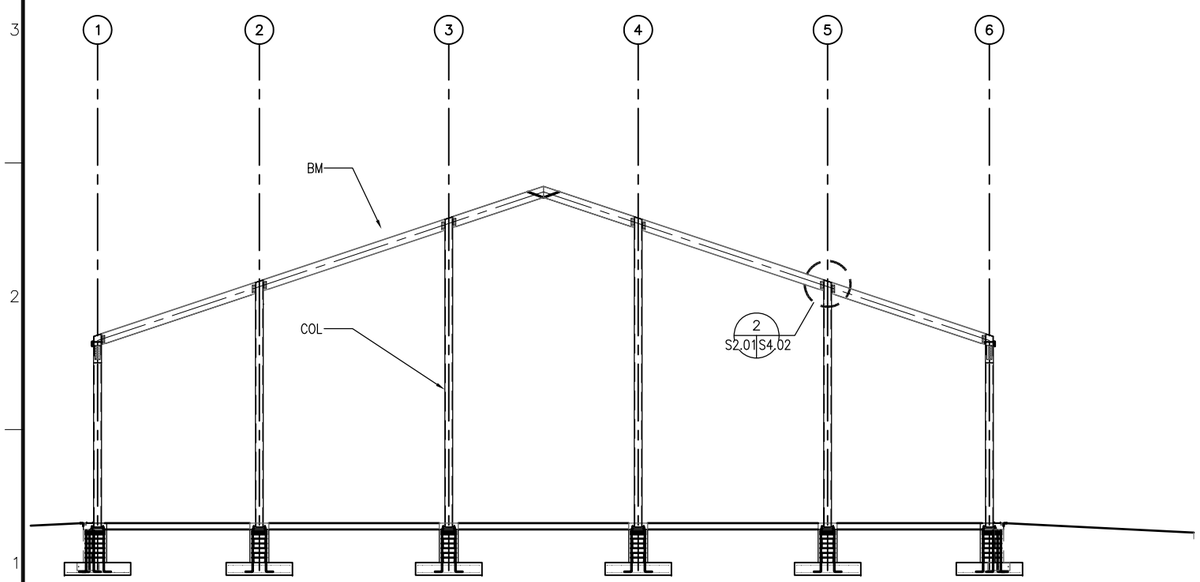

1 S1.02 S2.01 GRID I STEEL FRAME ELEVATION

SCALE: 1/8"=1'-0"

NOTES:

1. SEE SHEET S1.02 FOR BOTTOM OF STEEL DECK [BOD] ELEVATIONS.

NOT FOR CONSTRUCTION

BACKCHECK

US ARMY CORPS OF ENGINEERS
ALASKA DISTRICT

CONTRACT NO. _____
CONTRACTOR _____
CITY _____ STATE _____
PRIME CONTRACTOR _____
Recommended: _____
RESIDENT ENGINEER _____
Approved: _____
Date: _____

Mod.	Action	Description	Date	Approval

U.S. ARMY ENGINEER DISTRICT
CORPS OF ENGINEERS
ANCHORAGE, ALASKA

Designed: SMH
Drawn: SMH
Reviewed: P. Lam
Chief — Section
Submitted: D. Frenier
Chief — Branch
Date: 16 JULY 2009
Dwg Scale: AS NOTED
Plot Scale: 1:2
File: FTW336A-051-S2-01
Drawing #: F-211-13-01

INV. NO. W911KB-09-R-0007
PN 65076
FTW336A

FT. WAINWRIGHT, ALASKA
AIRCRAFT PARTS STORAGE
STRUCTURAL
ELEVATIONS
FRAME ELEVATIONS 1

Reference number:
S2.01

Drawing x:\UNIFIED\EN-TE\Jobs\FTW336A\Dwgs\FTW336A-051-S2-01.dwg last saved on 6/23/2009 7:48 AM was plotted by Curfew, Donald L POA on 7/17/2009 6:40 AM

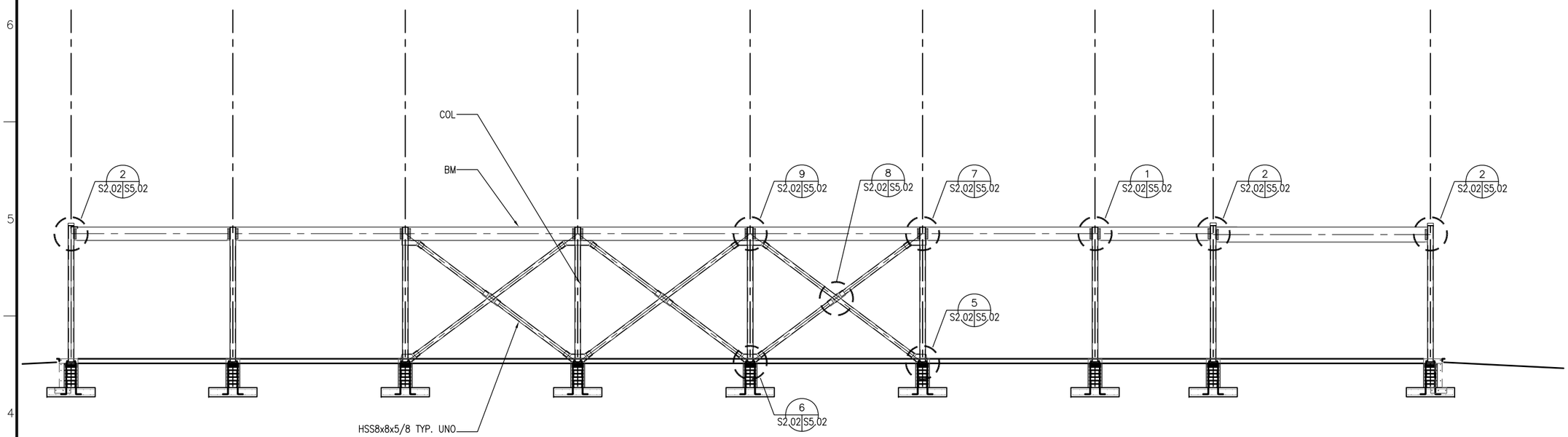

2 S1.02 S2.02 GRID 1 FRAMING ELEVATION
SCALE: 1/8"=1'-0"

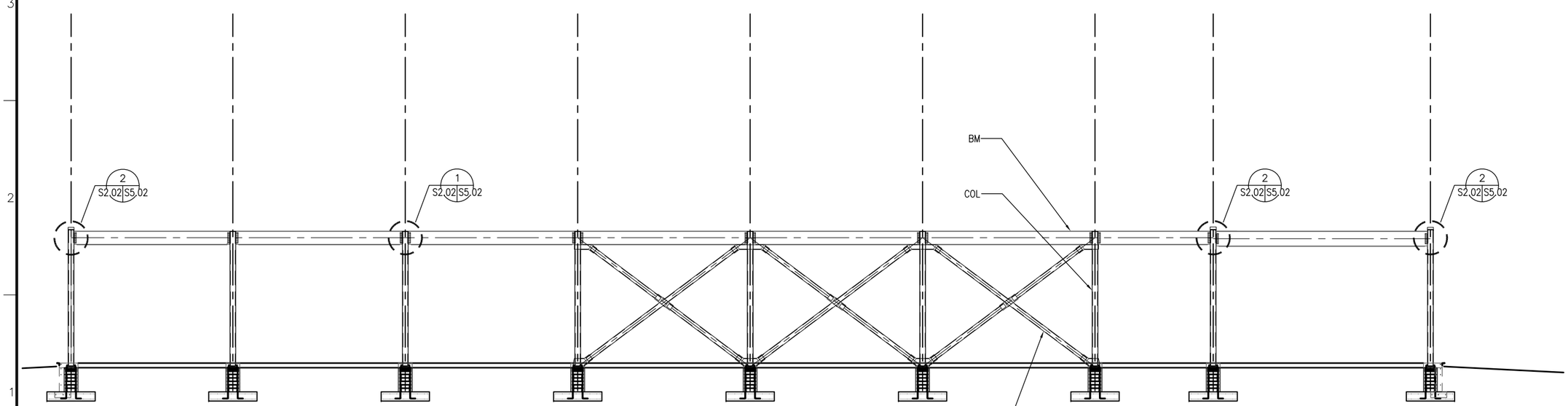

1 S1.02 S2.02 GRID 6 FRAMING ELEVATION
SCALE: 1/8"=1'-0"

NOTES:

1. SEE SHEET S1.02 FOR BOTTOM OF STEEL DECK [BOD] ELEVATIONS AND TOP OF STEEL ELEVATIONS [TOS].

NOT FOR CONSTRUCTION

BACKCHECK

US ARMY CORPS OF ENGINEERS
ALASKA DISTRICT

CONTRACT NO. _____
CONTRACTOR _____
CITY _____ STATE _____
Recommended: _____ PRIME CONTRACTOR
Approved: _____ RESIDENT ENGINEER
Date: _____

Grid	Action	Description	Date	Appvd

U.S. ARMY ENGINEER DISTRICT
CORPS OF ENGINEERS
ANCHORAGE, ALASKA

Designed: SMH
Drawn: SMH
Reviewed: P. Lorm
Chief — CEPOA-EN-TE-SA Section
Submitted: D. Trenier
Chief — CEPOA-EN-CD-SA Section
Date: 16 JULY 2009
Dwg Scale: AS NOTED
Plot Scale: 1:2
File: FTW336A-052-S2-02
Drawing #: F-2111-13-01

INV. NO. W911KB-09-R-0007
PN 65076
FTW336A

FT. WAINWRIGHT, ALASKA
AIRCRAFT PARTS STORAGE
STRUCTURAL
ELEVATIONS
FRAME ELEVATIONS 2

Reference number:
S2.02

Drawing x:\UNIFIED\EN-TE\Jobs\FTW336A\Dwgs\FTW336A-052-S2-02.dwg last saved on 6/23/2009 8:53 AM was plotted by Curfew, Donald L POA on 7/17/2009 6:40 AM

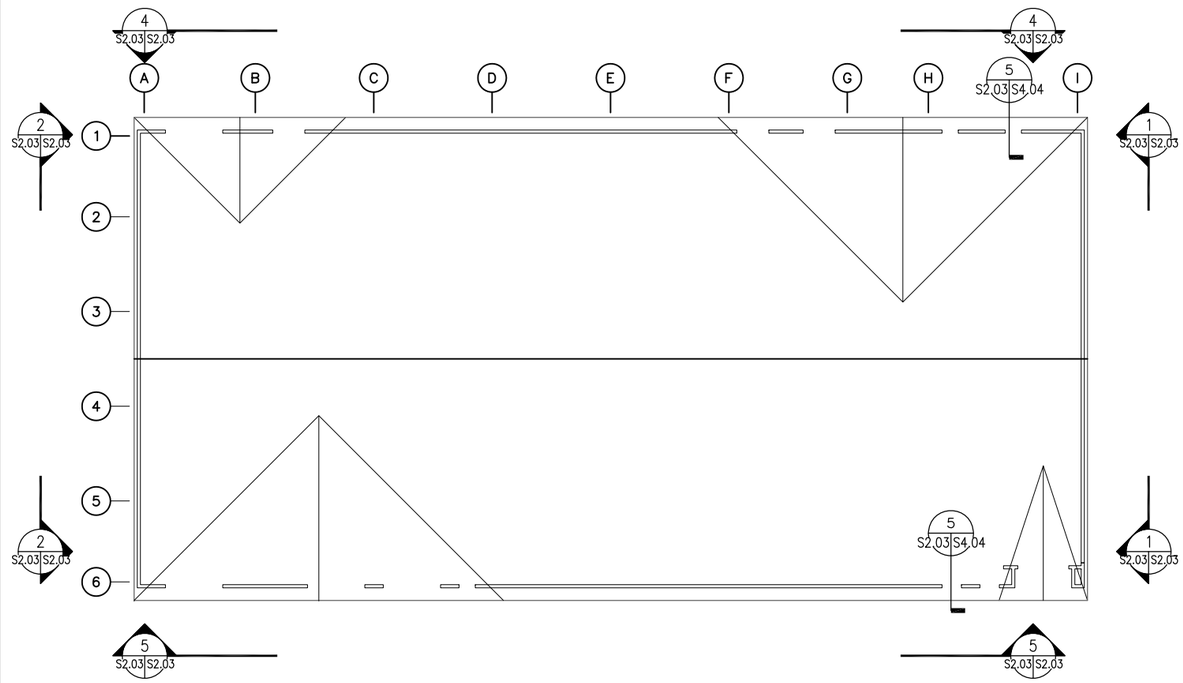

1 S2.03 S2.03 WALL OPENING PLAN
SCALE: 1/16"=1'-0"

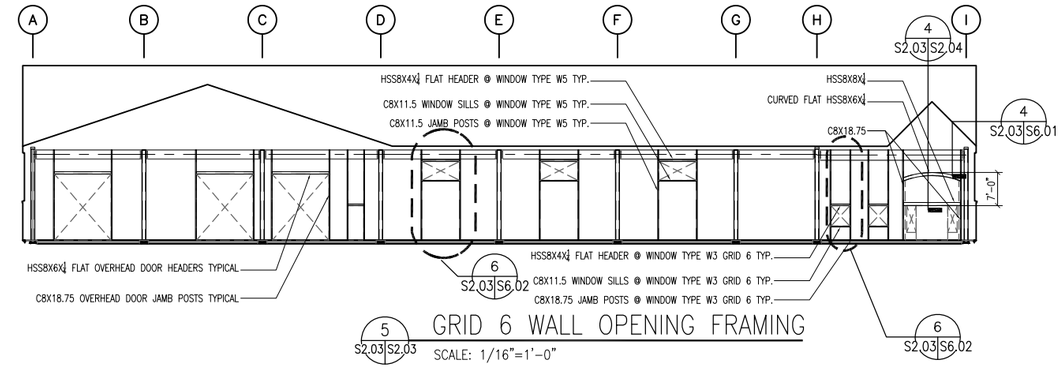

5 S2.03 S2.03 GRID 6 WALL OPENING FRAMING
SCALE: 1/16"=1'-0"

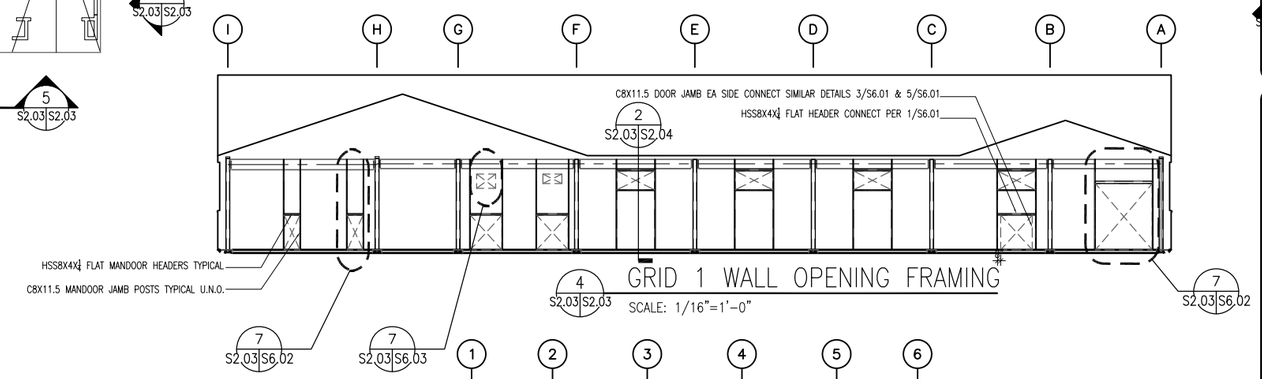

4 S2.03 S2.03 GRID 1 WALL OPENING FRAMING
SCALE: 1/16"=1'-0"

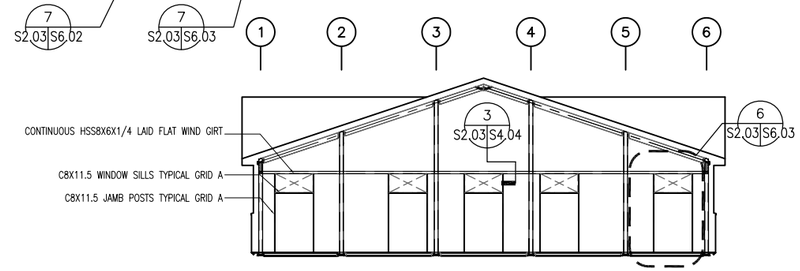

2 S2.03 S2.03 GRID A WALL OPENING FRAMING
SCALE: 1/16"=1'-0"

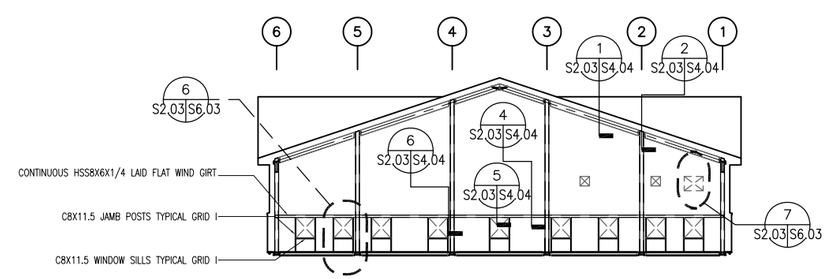

1 S2.03 S2.03 GRID I WALL OPENING FRAMING
SCALE: 1/16"=1'-0"

SHEET NOTES:

1. SEE SHEET S2.01 AND S2.02 FOR BRACED FRAMES.
2. SEE ARCHITECTURAL PLANS FOR ROUGH OPENING SIZES AND LOCATIONS. WINDOW AND DOOR TYPES PER SHEET A5.01.

NOT FOR CONSTRUCTION
BACKCHECK

US ARMY CORPS OF ENGINEERS
ALASKA DISTRICT

CONTRACT NO. _____
CONTRACTOR _____
CITY _____ STATE _____
PRIME CONTRACTOR _____
Recommended: _____
Approved: _____
RESIDENT ENGINEER _____
Date: _____

Symb	Action	Description	Date	Appvd
1 S2.03				

U.S. ARMY ENGINEER DISTRICT
CORPS OF ENGINEERS
ANCHORAGE, ALASKA

Designed: SMH
Drawn: SMH
Reviewed: P. Lorn
Chief: — CEPOA-TE-SA — Section
Submitted: D. Frenier
Chief: — CEPOA-TE-SA — Branch
Date: 16 JULY 2009
Dwg Scale: AS NOTED
Plot Scale: 1:2
File: FTW336A-053-S2-03
Drawing No: F-211-13-01

INV. NO. W911KB-09-R-0007
PN 65076
FTW336A

FT. WAINWRIGHT, ALASKA
AIRCRAFT PARTS STORAGE
STRUCTURAL
ELEVATIONS
FRAME ELEVATIONS 3

Reference number:
S2.03
Sheet 53 of 118

Drawing x:\UNIFIED\EN-TE\Jobs\FTW336A\Dwgs\FTW336A-053-S2-03.dwg last saved on 7/1/2009 11:54 AM was plotted by Curfew, Donald L POA on 7/17/2009 6:40 AM

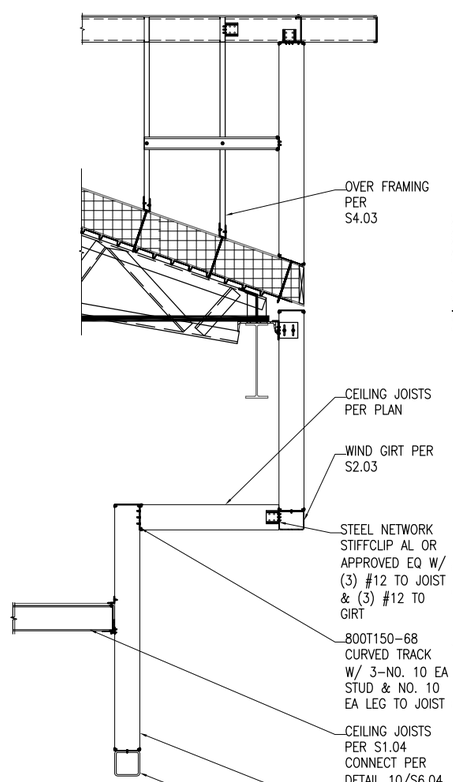

4 S2.03 S2.04 WALL SECTION
SCALE: 1/2"=1'-0"

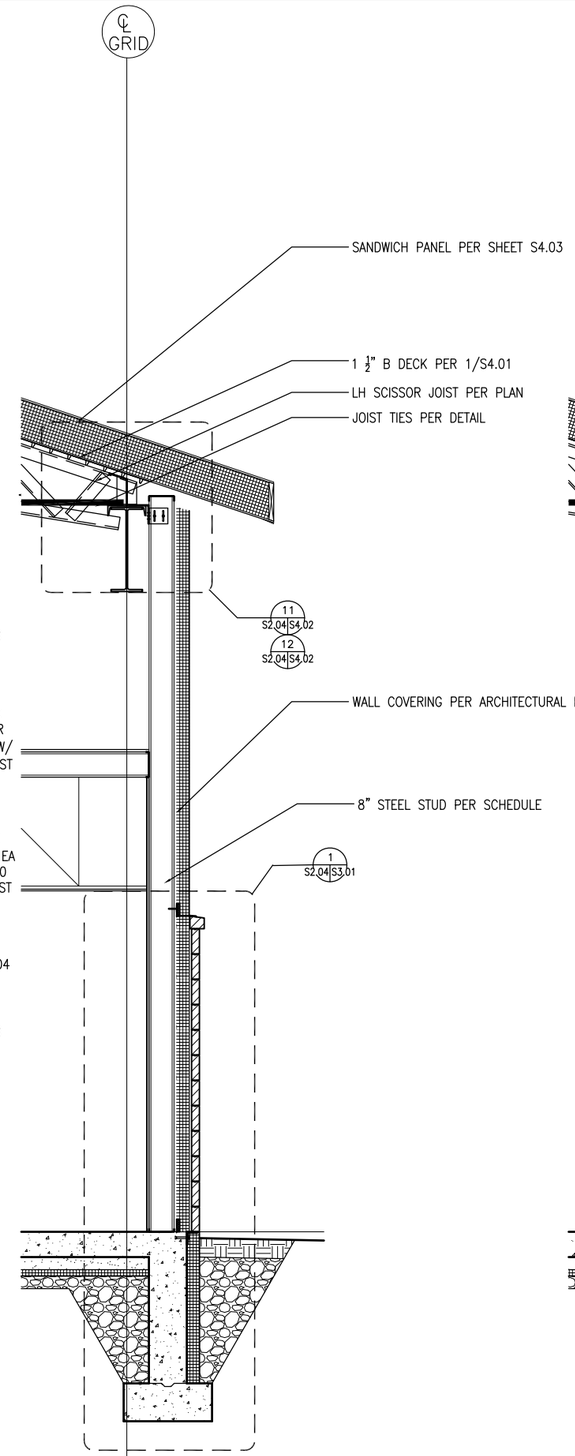

3 S1.02 S2.04 WALL SECTION
SCALE: 1/2"=1'-0"

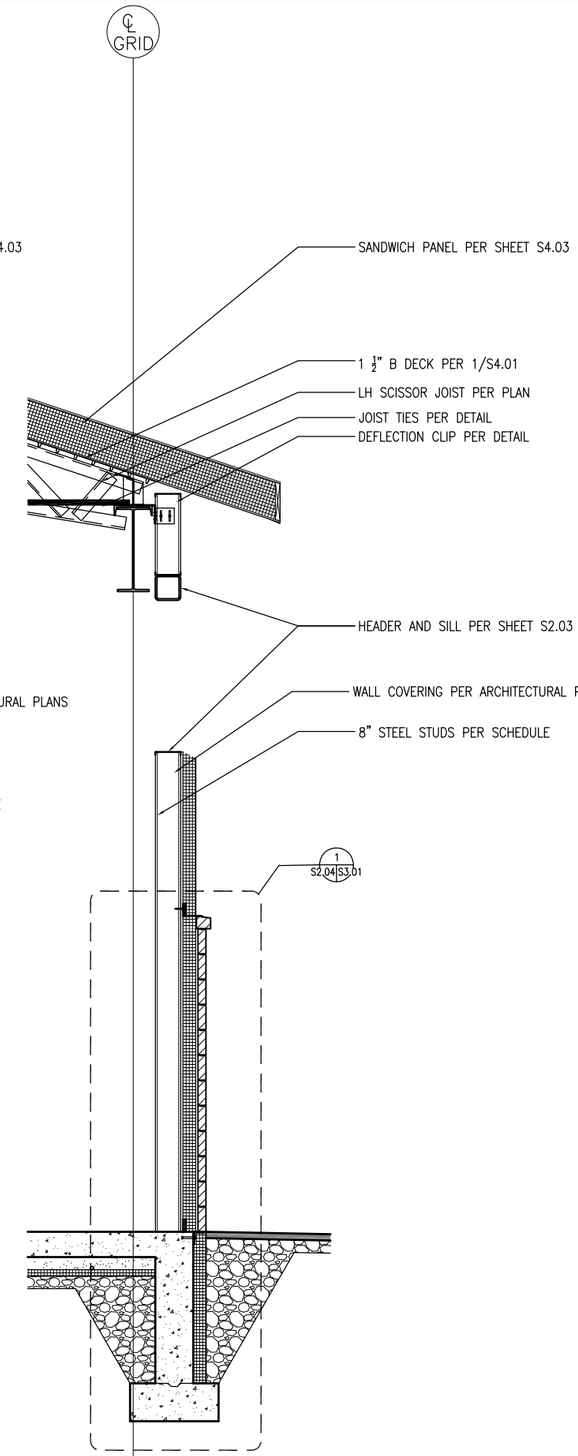

2 S2.03 S2.04 WALL SECTION
SCALE: 1/2"=1'-0"

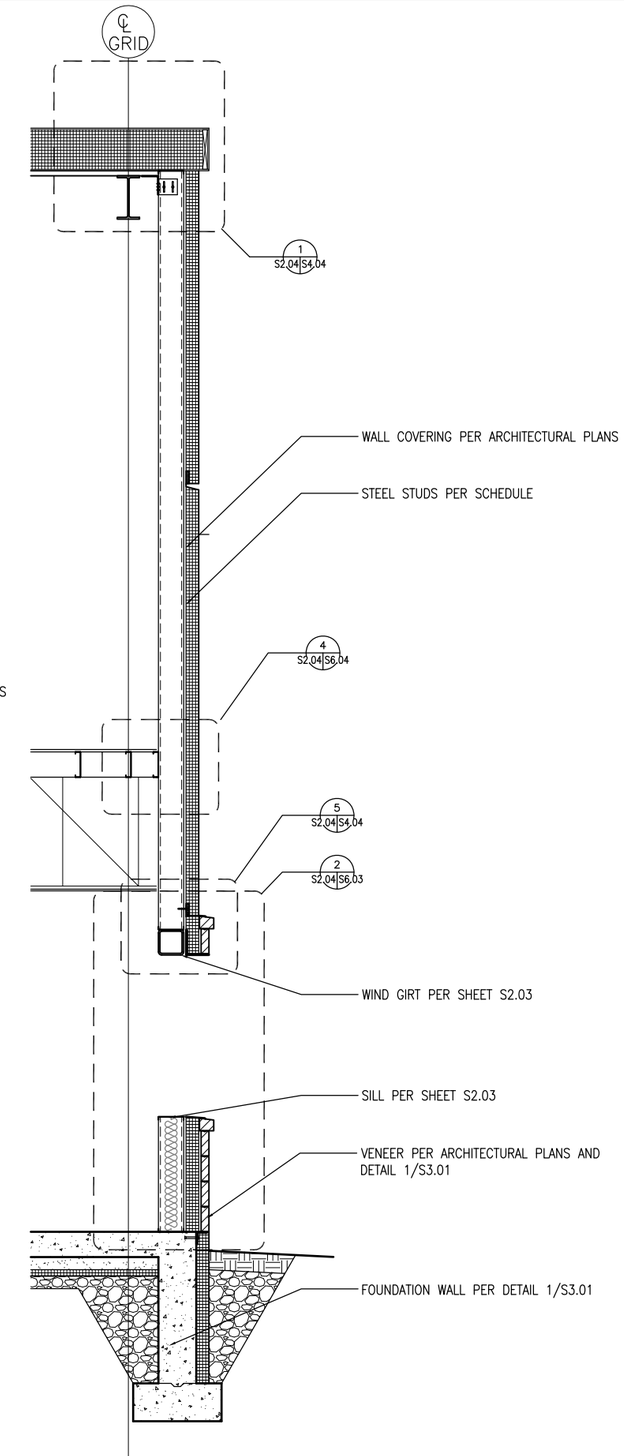

1 S1.02 S2.04 WALL SECTION
SCALE: 1/2"=1'-0"

NOT FOR CONSTRUCTION
BACKCHECK

US ARMY CORPS OF ENGINEERS
ALASKA DISTRICT

CONTRACT NO. _____
CONTRACTOR _____
CITY _____ STATE _____
PRIME CONTRACTOR _____
Recommended: _____
Approved: _____
RESIDENT ENGINEER _____
Date: _____

Symb	Action	Description	Date	Appvd

U.S. ARMY ENGINEER DISTRICT
CORPS OF ENGINEERS
ANCHORAGE, ALASKA

Designed: SMH
Drawn: SMH
Reviewed: P. Lam
Chief: ---- Section
Submitted: D. Frenier
Chief: ---- Branch
Date: 16 JULY 2009
Dwg Scale: AS NOTED
Plot Scale: 1:2
File: FTW336A-054-S2-04
Drawing No: F-211-13-01

INV. NO. W911KB-09-R-0007
PN 65076
FTW336A

FT. WAINWRIGHT, ALASKA
AIRCRAFT PARTS STORAGE
STRUCTURAL
ELEVATIONS
WALL SECTIONS 1

Reference number:
S2.04

Drawing x:\UNIFIED\EN-TE\Jobs\FTW336A\Dwgs\FTW336A-054-S2-04.dwg last saved on 7/1/2009 11:56 AM was plotted by Curfew, Donald L POA on 7/17/2009 6:41 AM

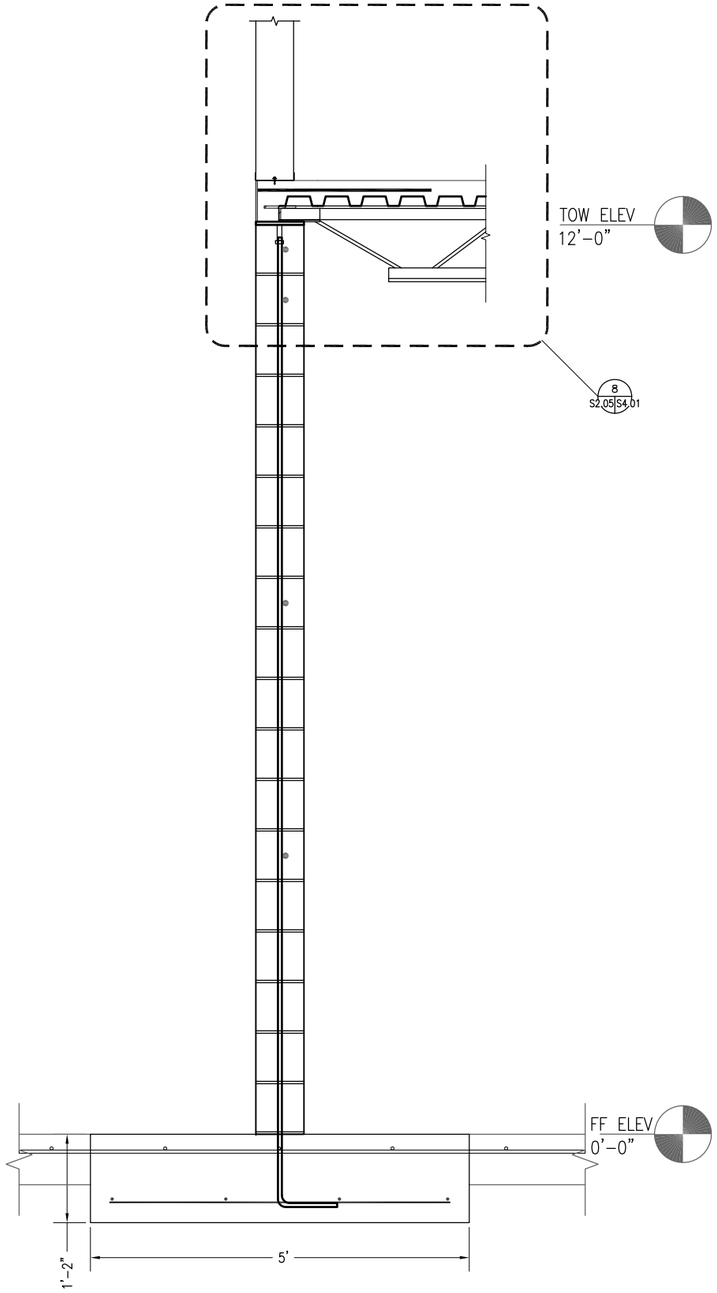

NOTE:
1. SEE DETAIL 1/S2.05 FOR INFORMATION NOT SHOWN

3 S1.03 S2.05 INTERIOR CMU WALL SECTION AT JOIST SUPPORT
SCALE: 1"=1'-0"

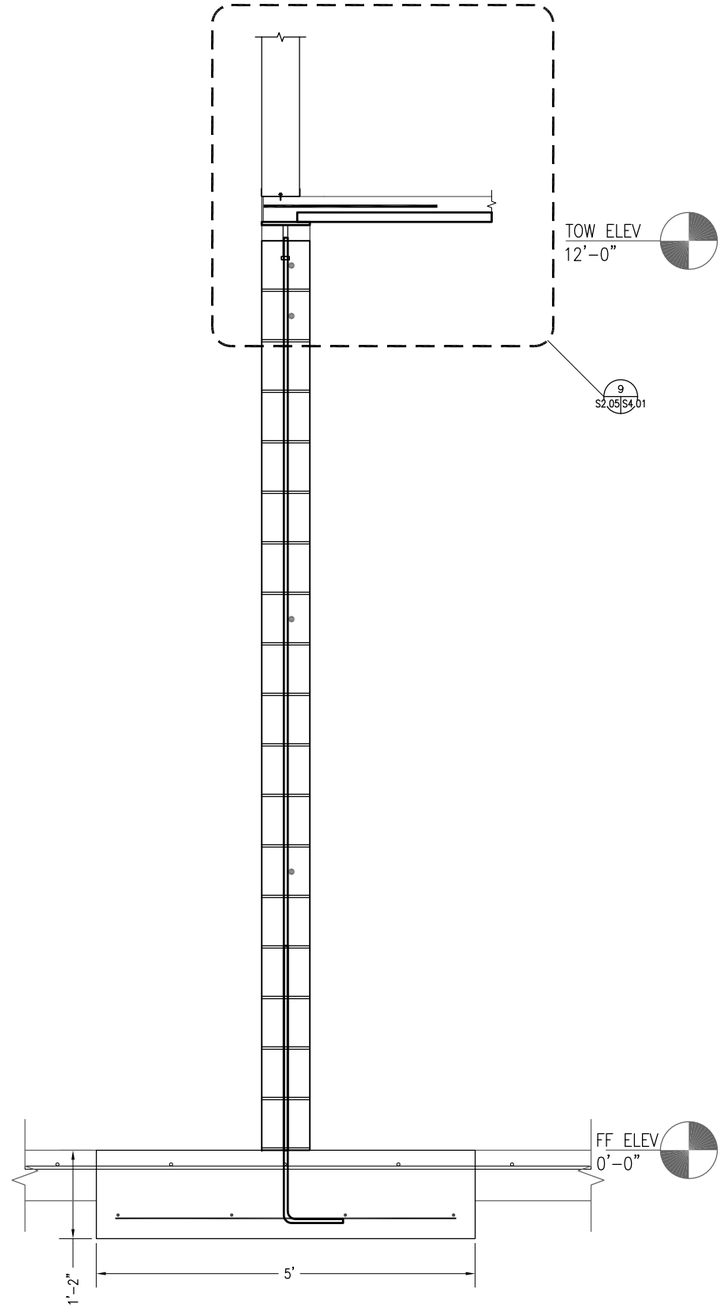

NOTE:
1. SEE DETAIL 1/S2.05 FOR INFORMATION NOT SHOWN

2 S1.03 S2.05 INTERIOR CMU WALL SECTION AT FLOOR DECK SUPPORT
SCALE: 1"=1'-0"

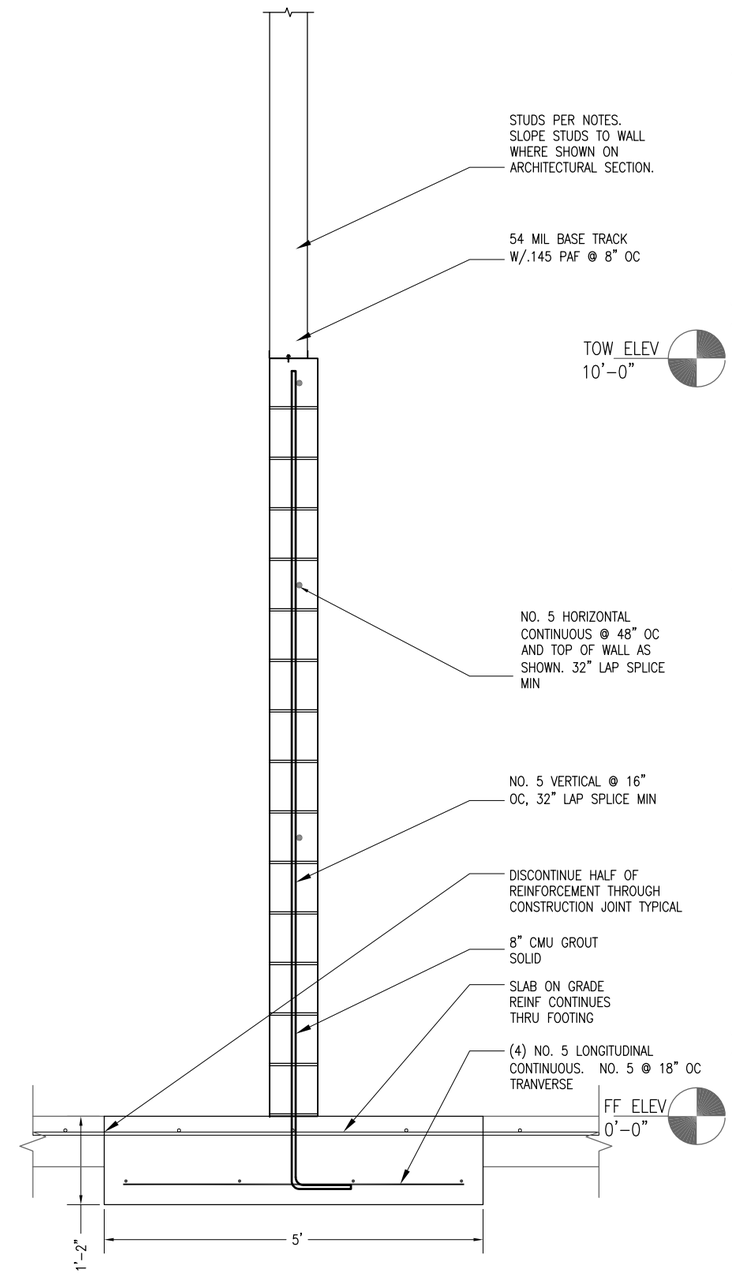

1 S1.03 S2.05 TYPICAL INTERIOR CMU WALL SECTION
SCALE: 1"=1'-0"

NOT FOR CONSTRUCTION
BACKCHECK

US ARMY CORPS OF ENGINEERS
ALASKA DISTRICT

CONTRACT NO. ___
CONTRACTOR ___
CITY ___ STATE ___
PRIME CONTRACTOR ___ Recommended: ___
RESIDENT ENGINEER ___ Approved: ___ Date: ___

Symb	Action	Description	Date	Appvd

U.S. ARMY ENGINEER DISTRICT
CORPS OF ENGINEERS
ANCHORAGE, ALASKA

Designed: SMH
Drawn: SMH
Reviewed: P. Lam
Chief — Grfnd-Fr-Ft-Sst — Section
Submitted: D. Frenter
Chief — Struc — Bldgs
Date: 16 JULY 2009
Dwg Scale: AS NOTED
Plot Scale: 1:2
File: FTW336A-055-S2-05
Drawing #: F-211-13-01

INV. NO. W911KB-09-R-0007
PN 65076
FTW336A

FT. WAINWRIGHT, ALASKA
AIRCRAFT PARTS STORAGE
STRUCTURAL
ELEVATIONS
WALL SECTIONS 2

Reference number:
S2.05

Drawing x:\UNIFIED\EN-TE\Jobs\FTW336A\Dwgs\FTW336A-055-S2-05.dwg last saved on 6/23/2009 11:50 AM was plotted by Curfew, Donald L POA on 7/17/2009 6:41 AM

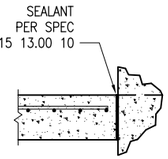

7 S1.01 S3.01 S.O.G. ISOLATION JOINT
SCALE: 1"=1'-0"

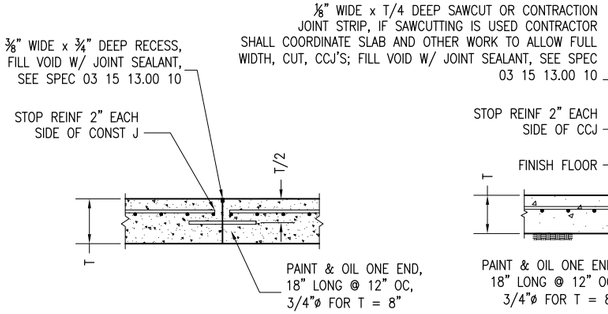

6 S1.01 S3.01 S.O.G. CONSTRUCTION JOINT
SCALE: 1"=1'-0"

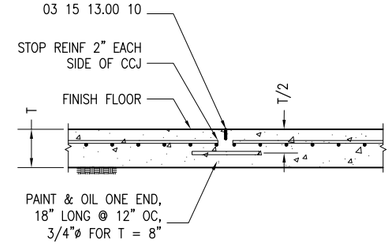

5 S1.01 S3.01 CRACK CONTROL JOINT [C.C.J.]
SCALE: 1"=1'-0"

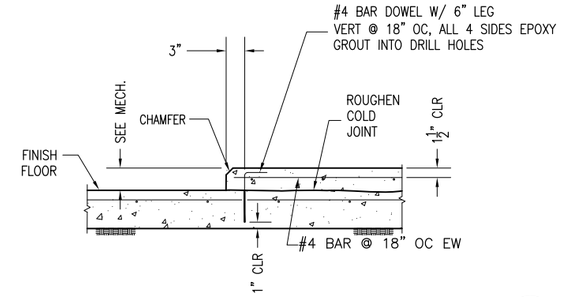

4 S1.01 S3.01 HOUSE KEEPING PAD
SCALE: 1"=1'-0"

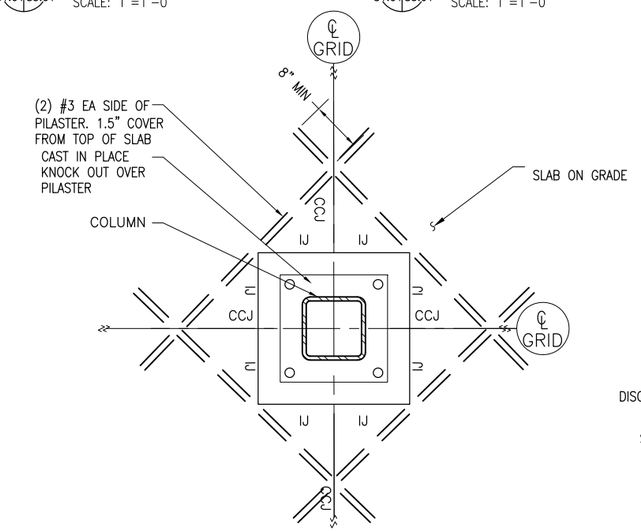

8 S1.01 S3.01 TYPICAL CONTROL JOINT @ INTERIOR COLUMN
SCALE: 1"=1'-0"

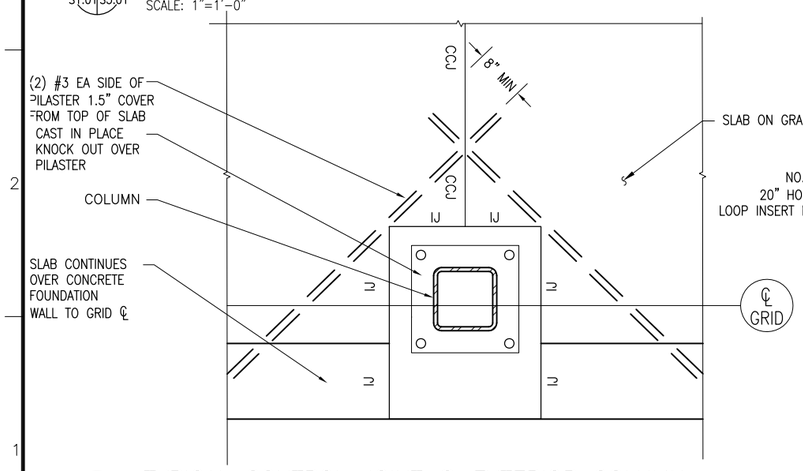

3 S1.01 S3.01 TYPICAL CONTROL JOINT @ EXTERIOR COLUMN
SCALE: 1"=1'-0"

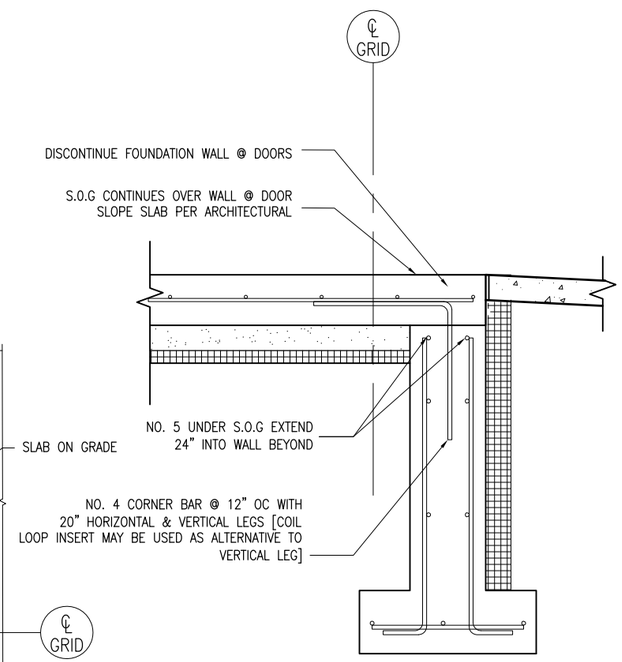

NOTES:
1. SEE DETAIL 1/S3.01 FOR INFORMATION NOT SHOWN.

2 S1.01 S3.01 TYPICAL S.O.G. @ DOOR
SCALE: 1"=1'-0"

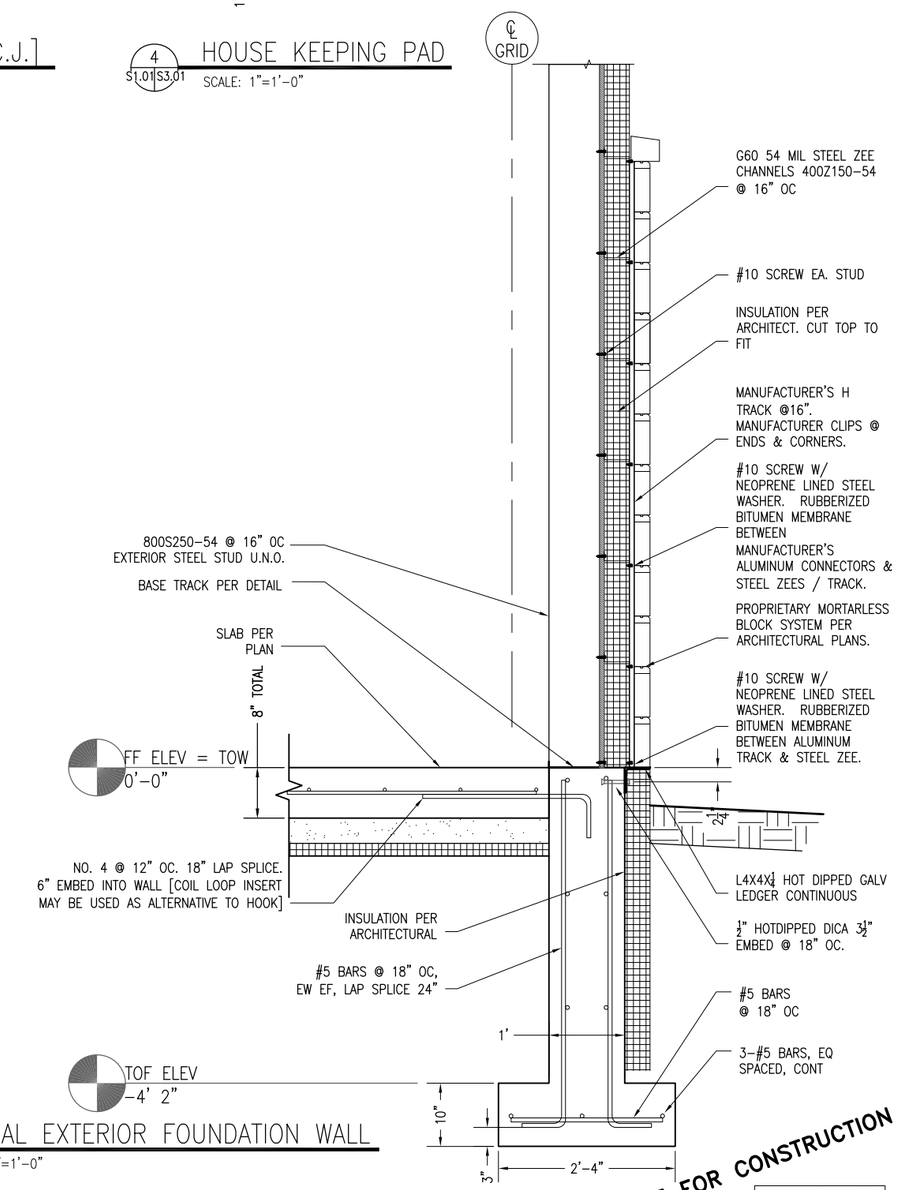

1 S1.01 S3.01 TYPICAL EXTERIOR FOUNDATION WALL
SCALE: 1"=1'-0"

NOT FOR CONSTRUCTION
BACKCHECK

US ARMY CORPS OF ENGINEERS
ALASKA DISTRICT

CONTRACT NO. ___
CONTRACTOR ___
CITY ___ STATE ___
PRIME CONTRACTOR ___ Recommended: ___
RESIDENT ENGINEER ___ Approved: ___ Date: ___

Symb	Action	Description	Date	Appvd

U.S. ARMY ENGINEER DISTRICT
CORPS OF ENGINEERS
ANCHORAGE, ALASKA

Designed: SMH
Drawn: SMH
Reviewed: P. Lorn
Chief: ___ Section
Submitted: D. Frenier
Chief: ___ Branch
Date: 16 JULY 2009
Dwg Scale: AS NOTED
Plot Scale: 1:2
File: FTW336A-056-S3-01
Drawing No. F-211-13-01

INV. NO. W911KB-09-R-0007
PN 65076
FTW336A

FT. WAINWRIGHT, ALASKA
AIRCRAFT PARTS STORAGE
STRUCTURAL
DETAILS
FOUNDATION DETAILS 1

Reference number:
S3.01

Drawing x:\UNIFIED\EN-TE\Jobs\FTW336A\Dwgs\FTW336A-056-S3-01.dwg last saved on 7/1/2009 2:56 PM was plotted by Curfew, Donald L POA on 7/17/2009 6:41 AM

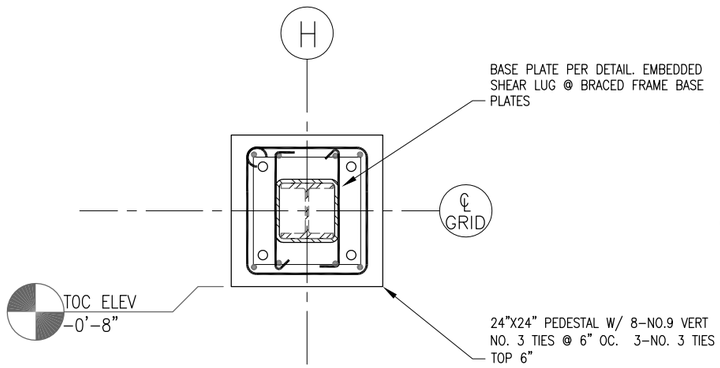

6 S1.01 S3.02 TYPICAL INTERIOR COLUMN PEDESTAL REINFORCEMENT

SCALE: 1"=1'-0"

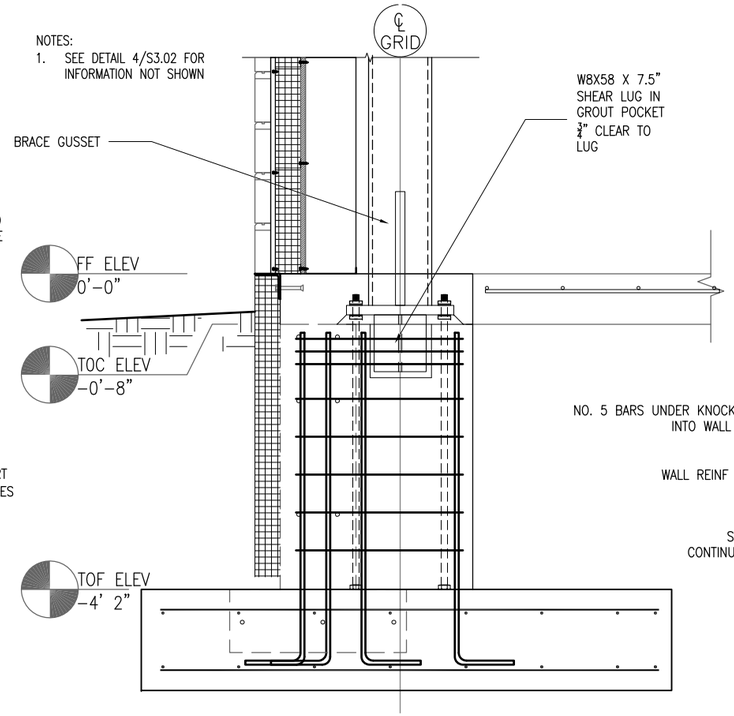

5 S1.01 S3.02 TYPICAL BRACED FRAME COL PEDESTAL REINFORCEMENT

SCALE: 1"=1'-0"

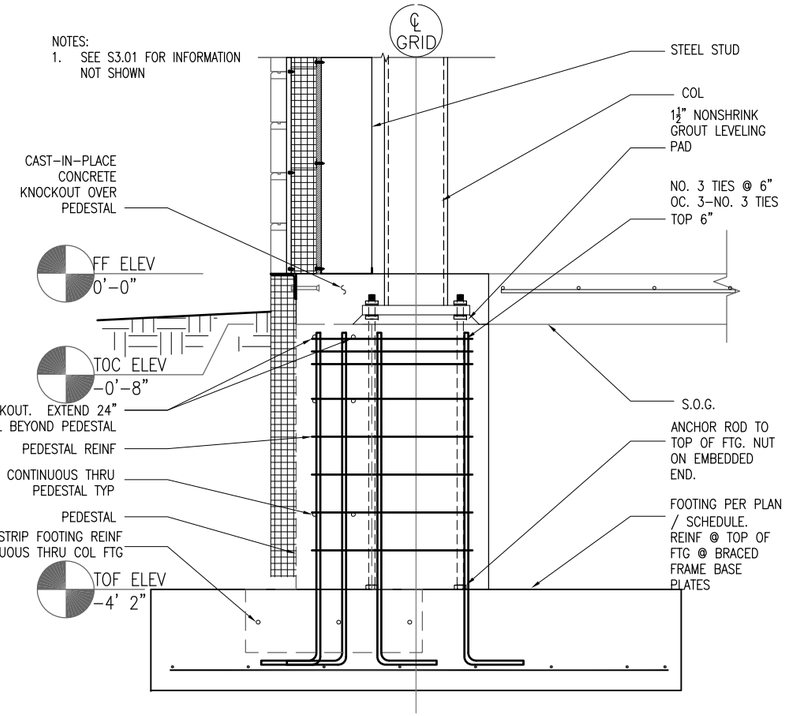

4 S1.01 S3.02 TYPICAL GRAVITY COLUMN PEDESTAL REINFORCEMENT

SCALE: 1"=1'-0"

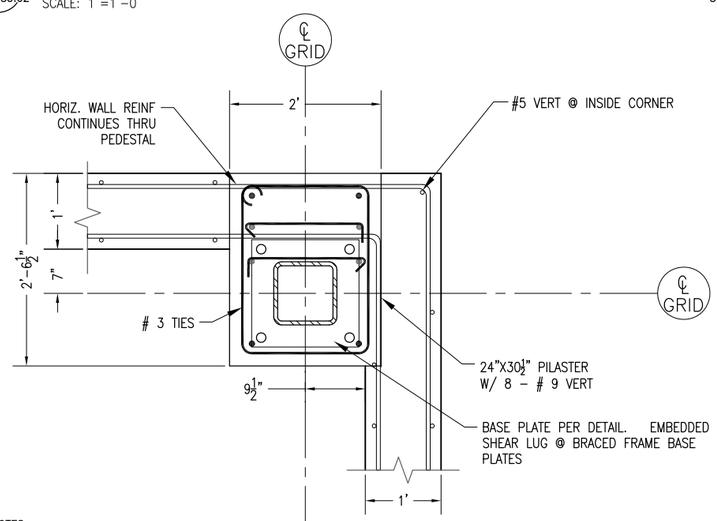

NOTES:
1. SEE DETAILS 1/S3.01 FOR INFORMATION NOT SHOWN.

3 S1.01 S3.02 TYPICAL CORNER PEDESTAL REINFORCEMENT

SCALE: 1"=1'-0"

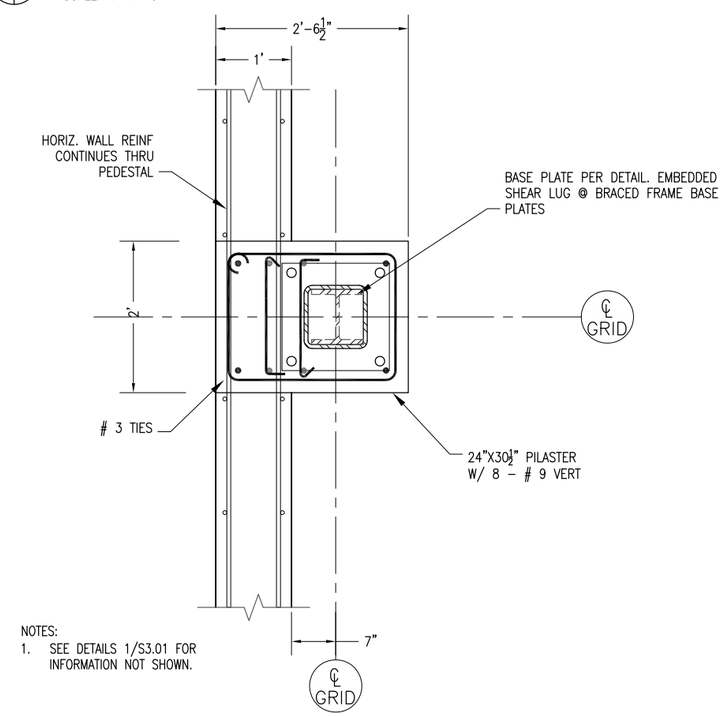

NOTES:
1. SEE DETAILS 1/S3.01 FOR INFORMATION NOT SHOWN.

2 S1.01 S3.02 TYPICAL END WALL PEDESTAL REINFORCEMENT

SCALE: 1"=1'-0"

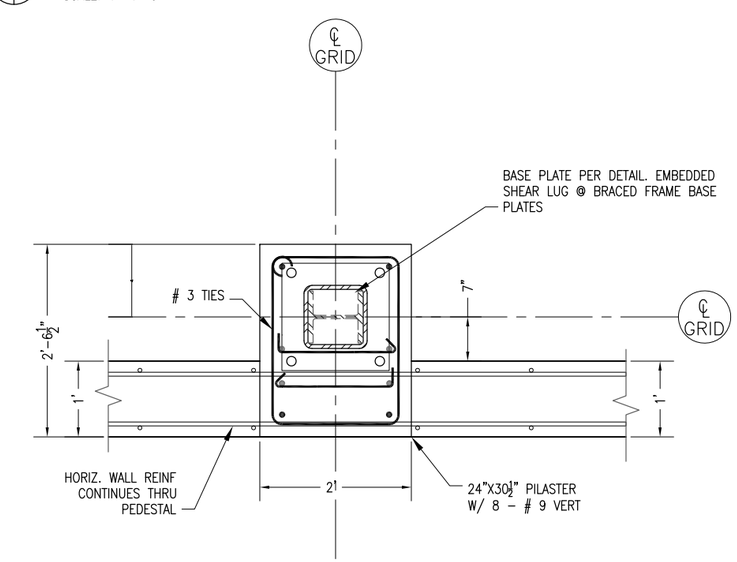

NOTES:
1. SEE DETAILS 1/S3.01 FOR INFORMATION NOT SHOWN.

1 S1.01 S3.02 TYPICAL PEDESTAL REINFORCEMENT @ GRAVITY COL

SCALE: 1"=1'-0"

NOT FOR CONSTRUCTION

BACKCHECK

US ARMY CORPS OF ENGINEERS
ALASKA DISTRICT

CONTRACT NO. _____
CONTRACTOR _____
CITY _____ STATE _____
PRIME CONTRACTOR _____
Recommended: _____
RESIDENT ENGINEER _____
Approved: _____
Date: _____

Symb	Action	Description	Date	Appvd

U.S. ARMY ENGINEER DISTRICT
CORPS OF ENGINEERS
ANCHORAGE, ALASKA

Designed: SMH
Drawn: SMH
Reviewed: P. Lorm
Chief — CEPOA-TS-TE-SA — Section
Submitted: D. Frenier
Chief — CEPOA-TS-TE — Branch
Date: 16 JULY 2009
Dwg Scale: AS NOTED
Plot Scale: 1:2
File: FTW336A-057-S3-02
Drawing No. F-211-13-01

INV. NO. W911KB-09-R-0007
PN 65076
FTW336A

FT. WAINWRIGHT, ALASKA
AIRCRAFT PARTS STORAGE
STRUCTURAL
DETAILS
FOUNDATION DETAILS 2

Reference number:
S3.02

Drawing x:\UNIFIED\EN-TE\Jobs\FTW336A\Dwgs\FTW336A-057-S3-02.dwg last saved on 6/23/2009 11:50 AM was plotted by Curfew, Donald L POA on 7/17/2009 6:41 AM

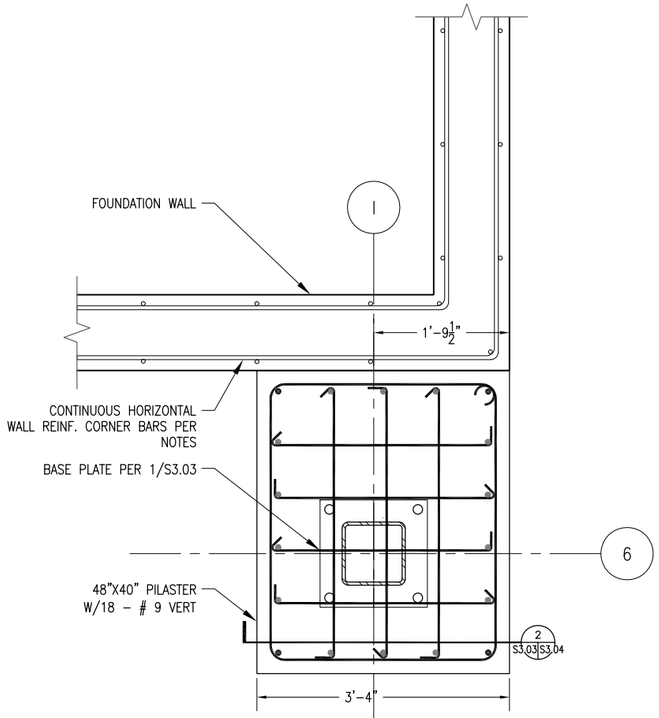

6 S1.01 S3.03 GRID 6 – GRID I PEDESTAL

SCALE: 1"=1'-0"

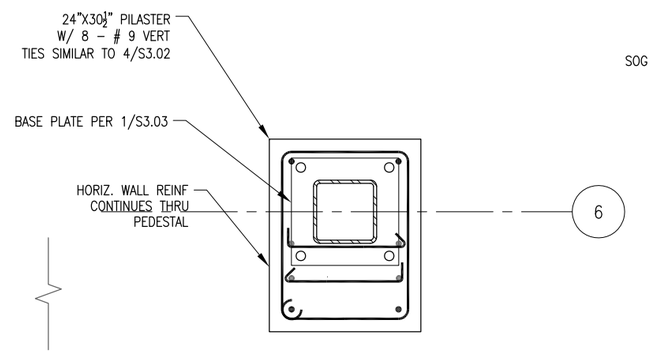

5 S1.01 S3.03 PEDESTAL REINFORCEMENT PLAN GRID I – GRID 6/6.2

SCALE: 1"=1'-0"

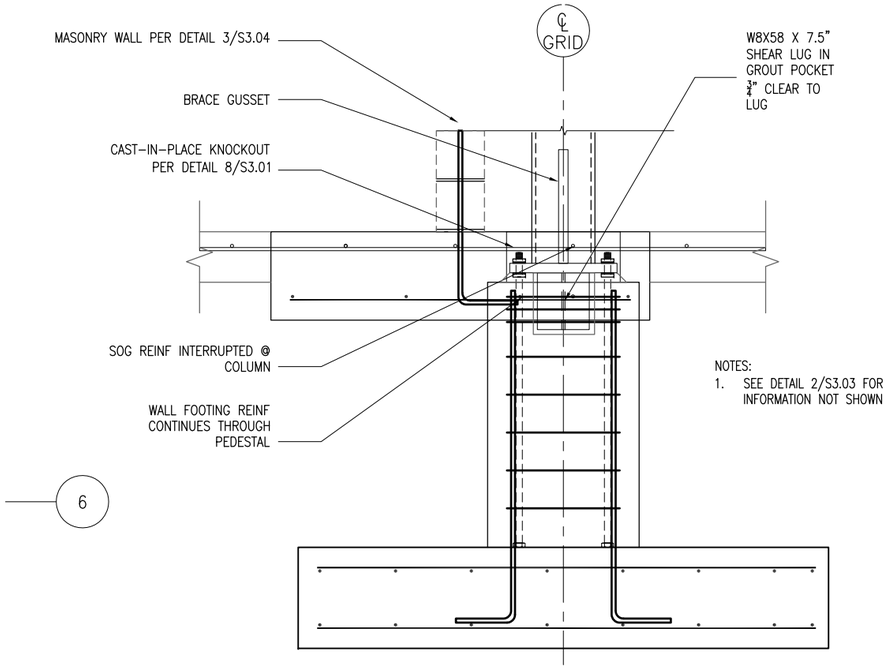

NOTES:
1. SEE DETAIL 2/S3.03 FOR INFORMATION NOT SHOWN

4 S1.01 S3.03 CMU WALL FOOTING @ INTERIOR COLUMN

SCALE: 1"=1'-0"

NOTES:
1. SEE DETAIL 4/S3.02 & DETAIL 3/S3.04 FOR INFORMATION NOT SHOWN

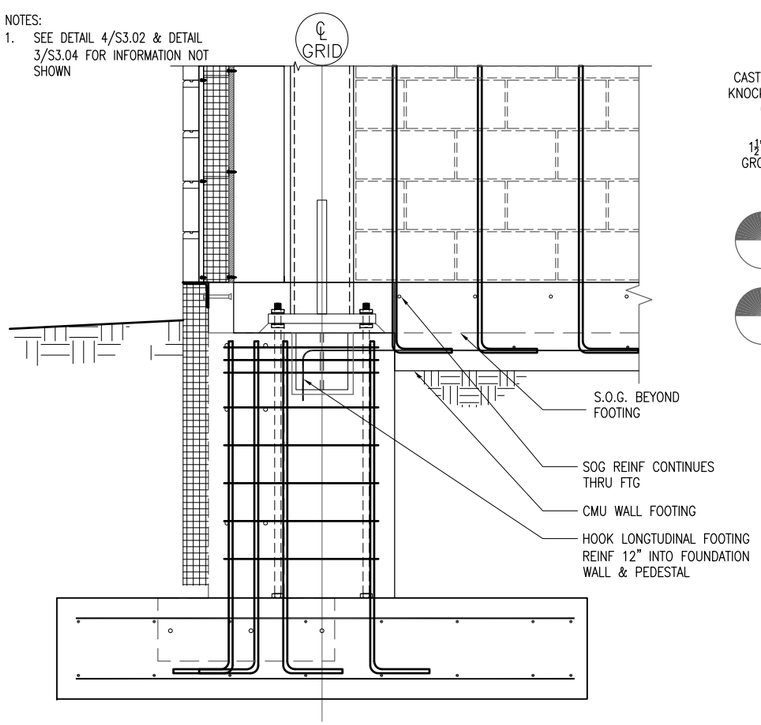

3 S1.01 S3.03 CMU WALL FOOTING @ EXTERIOR COLUMN

SCALE: 1"=1'-0"

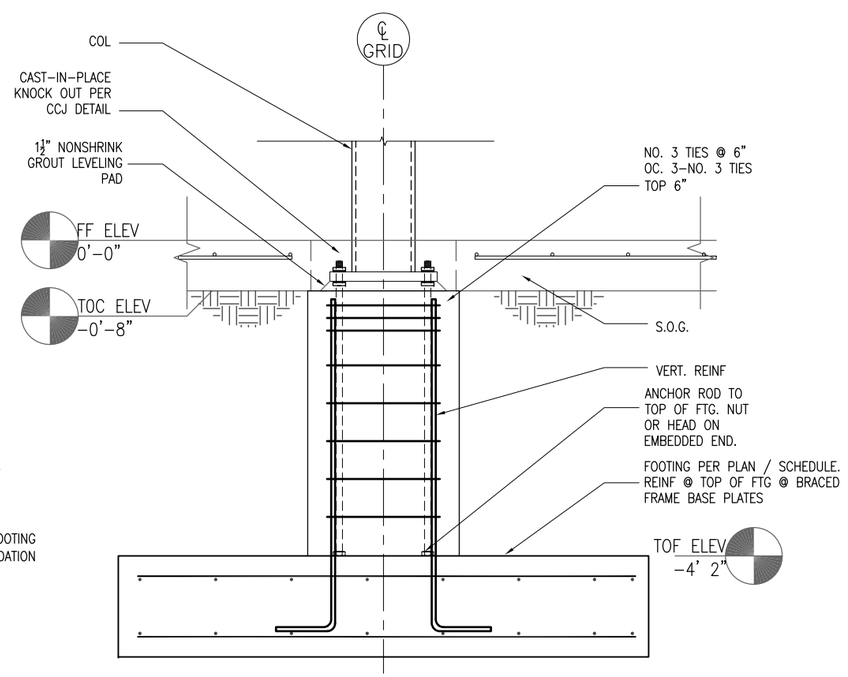

2 S1.01 S3.03 TYPICAL INTERIOR COLUMN PEDESTAL

SCALE: 1"=1'-0"

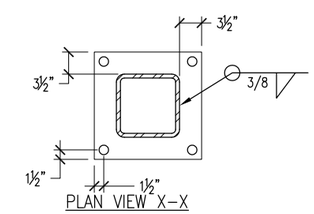

NOTES:
1. SEE DETAIL 1 ON S5.01 FOR BRACE FRAME SHEAR LUGS.

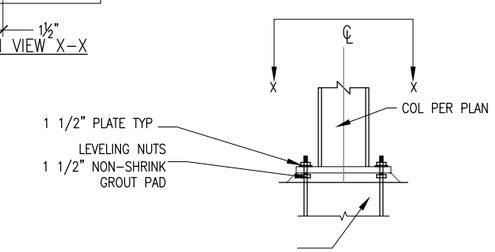

1 S1.01 S3.03 TYPICAL COLUMN BASE PLATE

SCALE: 1"=1'-0"

NOT FOR CONSTRUCTION

BACKCHECK

US ARMY CORPS OF ENGINEERS
ALASKA DISTRICT

CONTRACT NO. _____
CONTRACTOR _____
CITY _____ STATE _____
Recommended: _____ PRIME CONTRACTOR
Approved: _____ RESIDENT ENGINEER
Date: _____

Symb	Action	Description	Date	Appvd

U.S. ARMY ENGINEER DISTRICT
CORPS OF ENGINEERS
ANCHORAGE, ALASKA

Designed: SMH
Drawn: SMH
Reviewed: P. Lorm
Chief — CEPOA-EN-TE-SA — Section
Submitted: D. Frenier
Chief — CEPOA-EN-CW-ST — Branch
Date: 16 JULY 2009
Dwg Scale: AS NOTED
Plot Scale: 1:2
File: FTW336A-058-S3-03
Drawing No: F-211-13-01

INV. NO. W911KB-09-R-0007
PN 65076
FTW336A

FT. WAINWRIGHT, ALASKA
AIRCRAFT PARTS STORAGE
STRUCTURAL
DETAILS
FOUNDATION DETAILS 3

Reference number:
S3.03

Drawing x:\UNIFIED\EN-TE\Jobs\FTW336A\Dwgs\FTW336A-058-S3-03.dwg last saved on 6/23/2009 10:45 AM was plotted by Curfew, Donald L POA on 7/17/2009 6:41 AM

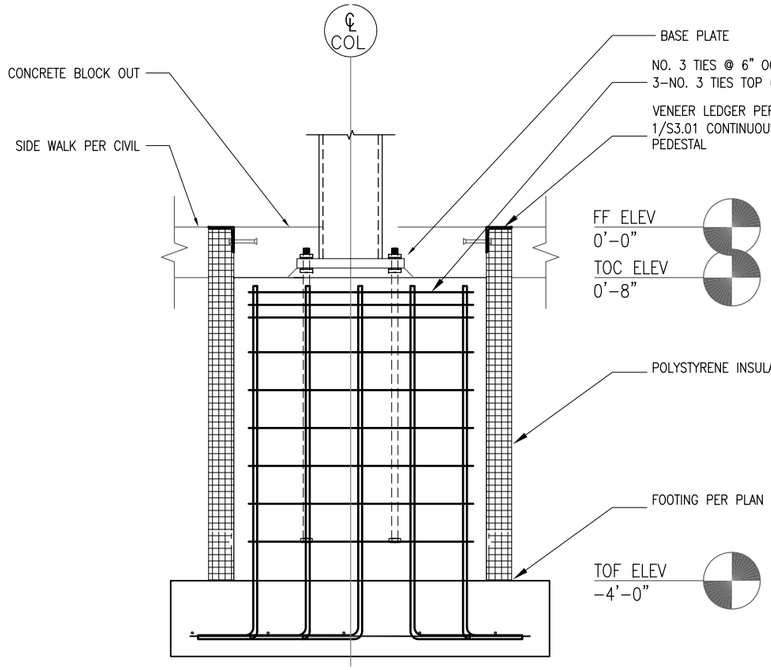

2 S3.03 S3.04 GRID 6/GRID I PEDESTAL SECTION

SCALE: 1"=1'-0"

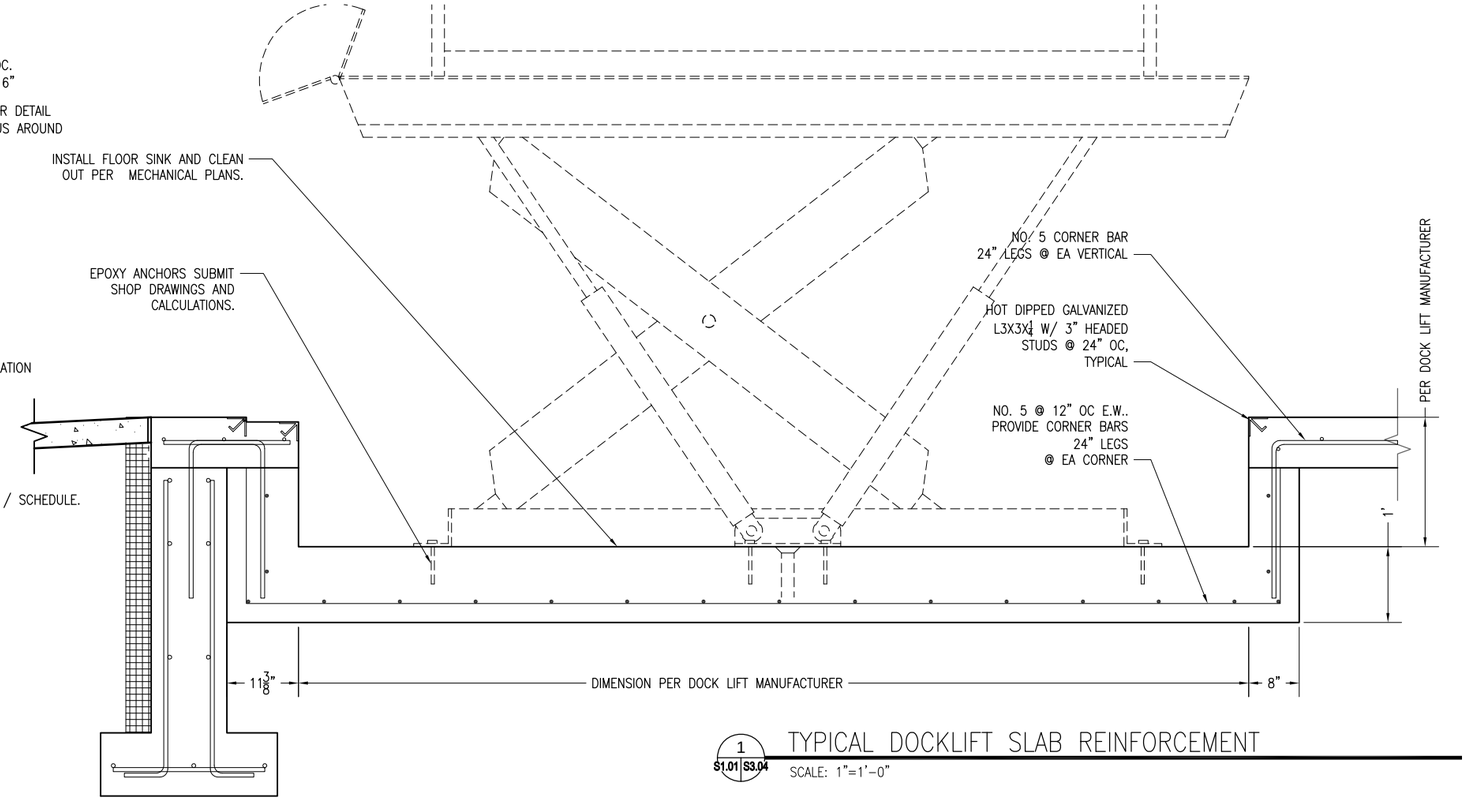

1 S1.01 S3.04 TYPICAL DOCKLIFT SLAB REINFORCEMENT

SCALE: 1"=1'-0"

NOT FOR CONSTRUCTION

BACKCHECK

US ARMY CORPS OF ENGINEERS
ALASKA DISTRICT

CONTRACT NO. _____
CONTRACTOR _____
CITY _____ STATE _____
PRIME CONTRACTOR _____
Recommended: _____
RESIDENT ENGINEER _____
Approved: _____
Date: _____

Sym	Action	Description	Date	Appvd

U.S. ARMY ENGINEER DISTRICT
CORPS OF ENGINEERS
ANCHORAGE, ALASKA

Designed: SMH
Drawn: SMH
Reviewed: P. Lum
Chief: ---- CEPOA-EN-TE-SAK ---- Section
Submitted: D. Frenier
Chief: ---- CEPOA-EN-CW-ED ---- Branch
Date: 16 JULY 2009
Dwg Scale: AS NOTED
Plot Scale: 1:2
File: FTW336A-059-S3-04
Drawing #: F-211-13-01
INV. NO. W911KB-09-R-0007
PN 65076
FTW336A

FT. WAINWRIGHT, ALASKA
AIRCRAFT PARTS STORAGE
STRUCTURAL
DETAILS
FOUNDATION DETAILS 4

Reference number:
S3.04

Drawing x:\UNIFIED\EN-TE\Jobs\FTW336A\Dwgs\FTW336A-059-S3-04.dwg last saved on 6/23/2009 1:31 PM was plotted by Curfew, Donald L POA on 7/17/2009 6:41 AM

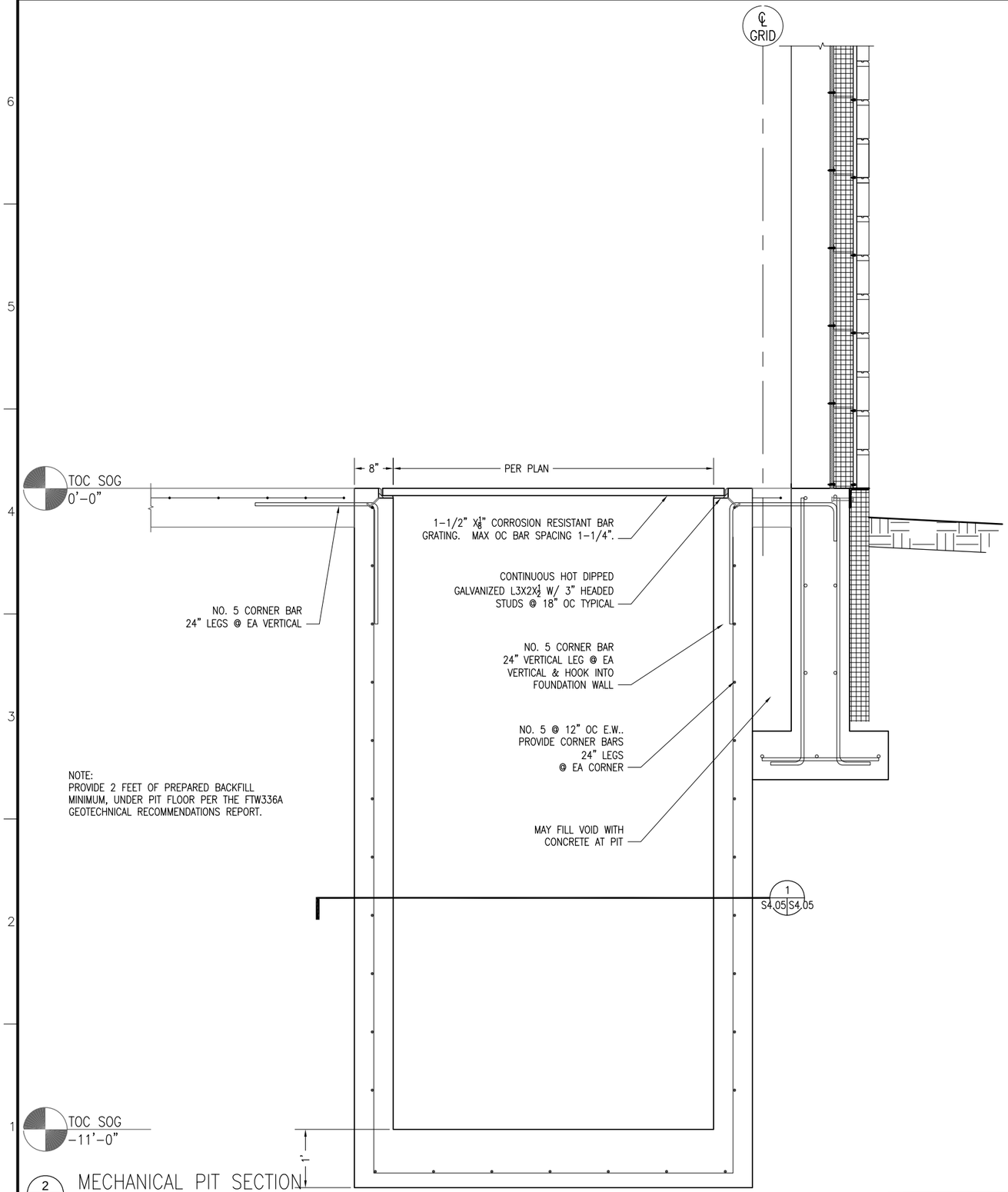

NOTE:
PROVIDE 2 FEET OF PREPARED BACKFILL MINIMUM, UNDER PIT FLOOR PER THE FTW336A GEOTECHNICAL RECOMMENDATIONS REPORT.

2 S1.01 S3.05 MECHANICAL PIT SECTION
SCALE: 1"=1'-0"

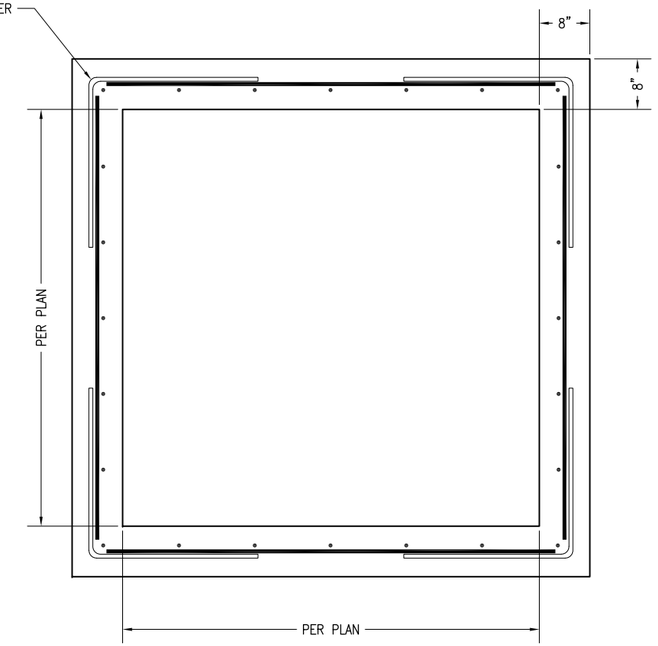

1 S3.05 S3.05 MECHANICAL PIT REINFORCING PLAN
SCALE: 1"=1'-0"

NOT FOR CONSTRUCTION
BACKCHECK

US ARMY CORPS OF ENGINEERS
ALASKA DISTRICT

CONTRACT NO. _____
CONTRACTOR _____
CITY _____ STATE _____
PRIME CONTRACTOR _____ Recommended: _____
RESIDENT ENGINEER _____ Approved: _____ Date: _____

Symb	Action	Description	Date	Appvd

U.S. ARMY ENGINEER DISTRICT
CORPS OF ENGINEERS
ANCHORAGE, ALASKA

Designed: SMH
Drawn: SMH
Reviewed: P. Lum
Chief — CEPOA-EN-CW-ES-SA — Section
Submitted: D. Frenier
Chief — CEPOA-EN-CW-ES — Branch
Date: 16 JULY 2009
Dwg Scale: AS NOTED
Plot Scale: 1:2
File: FTW336A-060-S3-05
Drawing # F-211-13-01

PN 65076
INV. NO. W911KB-09-R-0007
FTW336A

FT. WAINWRIGHT, ALASKA
AIRCRAFT PARTS STORAGE
STRUCTURAL
DETAILS
FOUNDATION DETAILS 5

Reference number:
S3.05

Drawing x:\UNIFIED\EN-TE\Jobs\FTW336A\Dwgs\FTW336A-060-S3-05.dwg last saved on 7/1/2009 1:18 PM was plotted by Curfew, Donald L POA on 7/17/2009 6:41 AM

SEE STEEL DECK NOTES, STEEL JOIST NOTES, SUSPENDED EQUIPMENT NOTES ON SHEET S0.1 & S0.2. THIS DETAIL APPLIES WHERE CONNECTIONS ARE NOT MADE DIRECTLY TO TOP CHORDS OF ROOF JOISTS. AS ALTERNATIVE PROVIDE CALCULATIONS FOR CONNECTIONS DIRECTLY TO STEEL DECK.

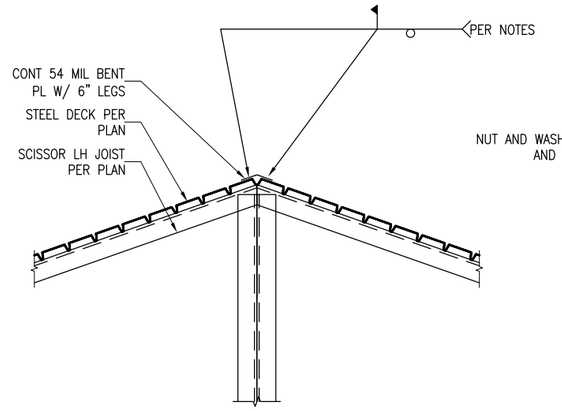

12 TYPICAL ROOF DECK AT RIDGE
S1.02 S4.01 SCALE: 3/4" = 1'-0"

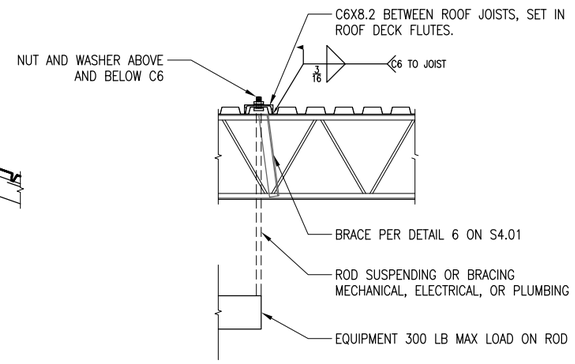

11 TYP. SUSPENDED EQUIP. SUPPORT @ ROOF
S4.01 S4.01 SCALE: 3/4" = 1'-0"

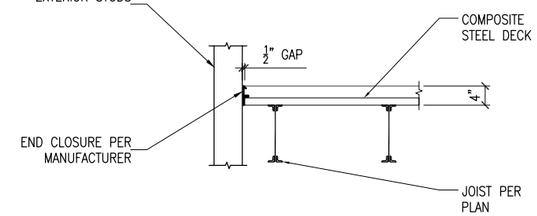

10 MEZZANINE FLOOR AT EXTERIOR WALL
S2.05 S4.01 SCALE: 3/4" = 1'-0"

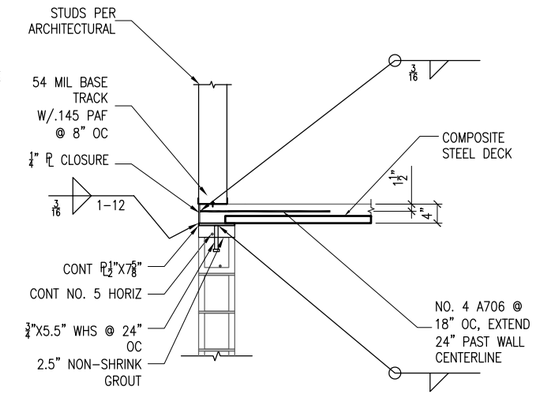

NOTES:
1. SEE DETAIL 8/S4.01 FOR INFO NOT SHOWN.

9 COMPOSITE FLOOR SLAB @ CMU WALL
S2.05 S4.01 SCALE: 3/4" = 1'-0"

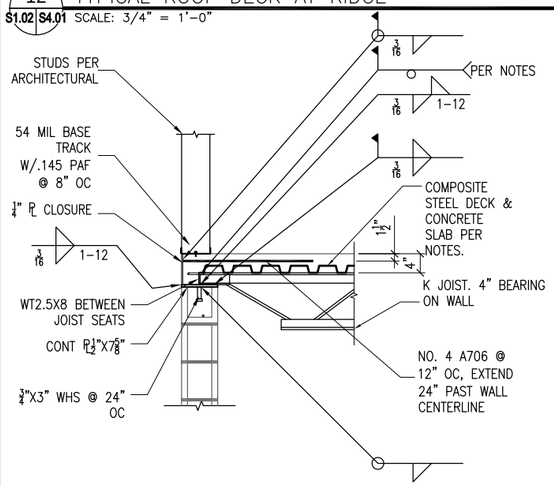

8 TYPICAL K JOIST SEAT @ CMU WALL
S2.05 S4.01 SCALE: 3/4" = 1'-0"

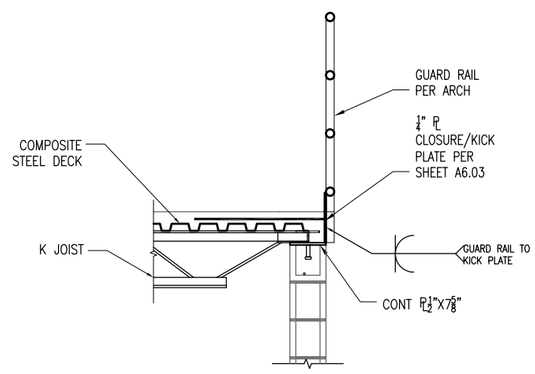

NOTES:
1. SEE DETAIL 8/S4.01 FOR INFORMATION NOT SHOWN.

7 GUARD RAIL AT JOIST SUPPORT
S2.05 S4.01 SCALE: 3/4" = 1'-0"

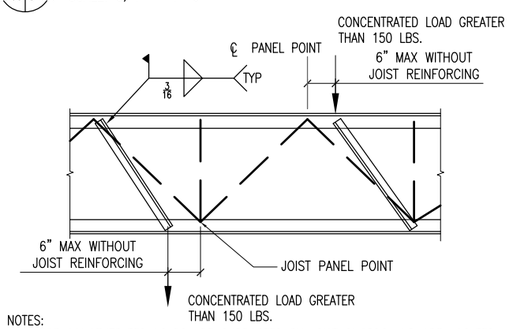

NOTES:
1. WHERE CONCENTRATED LOADS ARE SUPPORTED BY JOIST CHORDS AND ARE LOCATED A DISTANCE OF MORE THAN 6" FROM A PANEL POINT, REINFORCE JOIST WITH L2x2x1/4 EXTENDING FROM PANEL POINT ON OPPOSITE CHORD. PER JOIST MANUFACTURER'S INSTRUCTIONS.
2. CONTRACTOR TO PROVIDE ALL CONC LOAD [GREATER THAN 300 LBS] LOCATIONS TO JOIST SUPPLIER (MECH, ELEC, ARCH, SIESMIC) FOR INCLUSION IN DESIGN.
3. ANY ADDED SUPPORTS SHALL BE ATTACHED TO BOTH MEMBERS OF TOP OR BOTTOM CHORD AND CONCENTRIC WITH THE JOIST VERTICAL CENTERLINE.
4. LATERAL BRACES FOR EQUIPMENT OR OTHER ITEMS SHALL ONLY BE CONNECTED TO JOIST TOP CHORDS WHEN CONNECTED TO JOISTS.

6 TYP. JOIST REINFORCEMENT @ CONCENTRATED LOAD
S4.01 S4.01 SCALE: 3/4" = 1'-0"

NOTES:
1. ADJACENT OPENINGS SHALL NOT BE LOCATED WITHIN 32" OF EACH OTHER.
2. PLACE ANGLES ON TOP OF DECK.
3. FLOOR OPENINGS LESS THAN 6 INCHES IN DIAMETER AND CUTTING NO MORE THAN 1 WEB DO NOT REQUIRE REINFORCEMENT.
4. ALTERNATIVE REINFORCEMENT PER MANUFACTURERS INSTRUCTIONS IS ACCEPTABLE.

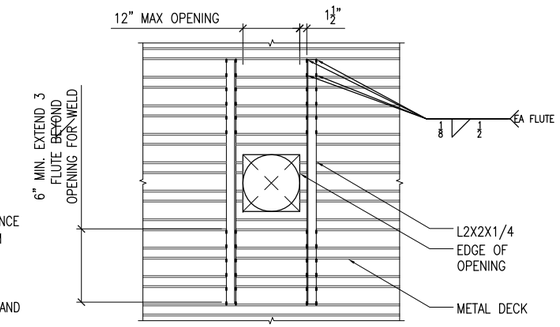

PLAN

5 TYPICAL SMALL OPENING IN DECK
S4.01 S4.01 SCALE: 3/4" = 1'-0"

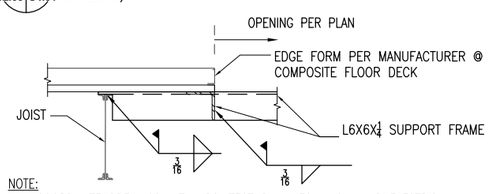

NOTE:
1. COORDINATE OPENINGS WITH ARCHITECTURAL, MECHANICAL AND ELECTRICAL.
2. INSTALL FOR OPENINGS 48 OR LESS INCHES WIDE BUT GREATER THAN 12" IN DIAMETER.
3. INSTALL REINFORCEMENT PER DETAIL 6 ON THIS SHEET AT FRAME SUPPORTS.

REINFORCEMENT SECTION

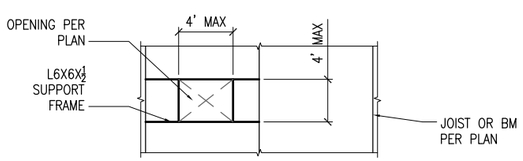

TYPICAL DECK REINFORCEMENT PLAN

4 TYPICAL METAL DECK OPENING REINFORCEMENT
S4.01 S4.01 SCALE: 3/4" = 1'-0"

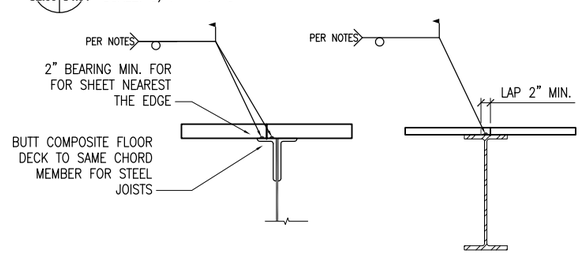

COMPOSITE FLOOR DECK END SPLICE

NON-COMPOSITE ROOF DECK END SPLICE

3 TYPICAL STEEL DECK END SPLICES
S4.01 S4.01 SCALE: 3/4" = 1'-0"

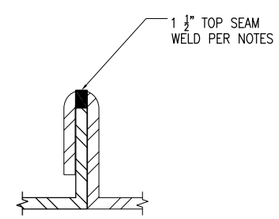

TOP SEAM WELD

NOTES:
1. PUNCH LOK SYSTEM MAY BE USED WHERE EQUIVALENT DIAPHRAGM SHEAR STRENGTH IS ACHIEVED.
2. BUTTON PUNCH IS NOT ALLOWED FOR ROOF DECK.

2 TYPICAL SIDE LAP CONNECTIONS
S4.01 S4.01 SCALE: 3/4" = 1'-0"

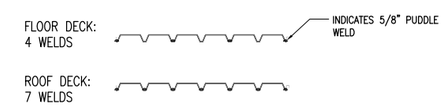

METAL DECK ATTACHMENT SCHEDULE

LOCATION	TYPE	NO. OF WELDS / SHT @ SUPPORTS	WELD TO SUPPORTS PARALLEL TO FLUTES	SIDE SEAM CONNECTION	MINIMUM SHEAR CAPACITY [KLF]
ROOF	B 18 GAGE	7 PUDDLE WELDS / SHEET SUPPORTS	PUDDLE WELDS @ 12" OC	TOP SEAM WELDS @ 12" OC	1.26 KLF
FLOOR	B FORM-LOK 20 GAGE	4 PUDDLE WELDS @ SUPPORTS	PUDDLE WELDS @ 12" OC	BUTTON PUNCH @ 36" OC	2.13 KLF

NOTES:
1. ALL PUDDLE WELDS 5/8" ø (1/2" EFFECTIVE)
2. GROSS WIND UPLIFT PER SHEET S.06.
3. DECKING SHALL BE WELDED TO EACH MEMBER AND ELEMENT OF MEMBER AS INDICATED.
4. DECKING DAMAGED BY WELD BURN THROUGH SHALL BE REPLACED OR REPAIRED ACCORDING TO MANUFACTURER'S INSTRUCTIONS.
5. SUPPORT MEMBERS DAMAGED BY WELDING OF DECKING SHALL BE REPLACED OR REPAIRED ACCORDING TO MANUFACTURER'S INSTRUCTIONS.
6. 4" TOTAL FLOOR SLAB THICKNESS. FLUTE DEPTH 1.5".

1 STEEL DECK SCHEDULE
S1.01 S4.01 SCALE: 3/4" = 1'-0"

NOT FOR CONSTRUCTION
BACKCHECK

US ARMY CORPS OF ENGINEERS
ALASKA DISTRICT

CONTRACT NO. _____
CONTRACTOR _____
CITY _____ STATE _____
PRIME CONTRACTOR: _____
Recommended: _____
RESIDENT ENGINEER: _____
Approved: _____
Date: _____

Mark	Action	Description	Date	Appvd

U.S. ARMY ENGINEER DISTRICT
CORPS OF ENGINEERS
ANCHORAGE, ALASKA

Designed: SMH
Drawn: SMH
Reviewed: P. Lorn
Chief — Section
Submitted: D. Frenier
Chief — Section
Date: 16 JULY 2009
Dwg Scale: AS NOTED
Plot Scale: 1:2
File: FTW336A-061-S4-01
Drawing No: F-211-13-01

INV. NO. W911KB-09-R-0007
PN 65076
FTW336A

FT. WAINWRIGHT, ALASKA
AIRCRAFT PARTS STORAGE
STRUCTURAL
DETAILS
FRAMING DETAILS 1

Reference number:
S4.01
Sheet 61 of 118

Drawing x:\UNIFIED\EN-TE\Jobs\FTW336A\Dwgs\FTW336A-061-S4-01.dwg last saved on 6/23/2009 11:50 AM was plotted by Curfew, Donald L POA on 7/17/2009 6:41 AM

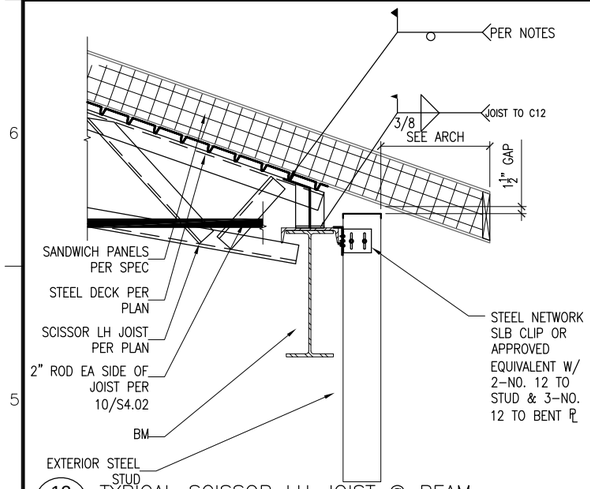

12 TYPICAL SCISSOR LH JOIST @ BEAM
S1.02 S4.02 S2.04 SCALE: 3/4" = 1'-0"

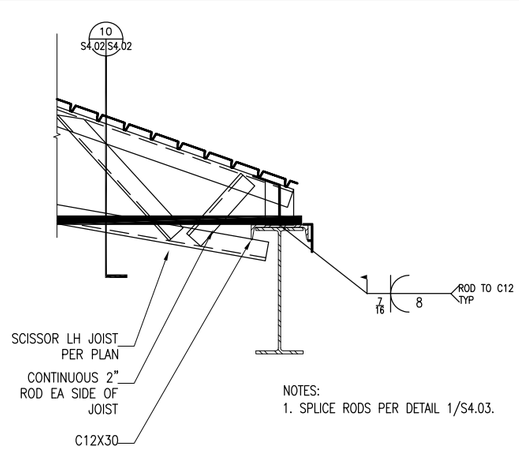

11 TYPICAL SCISSOR LH JOIST TIES
S1.02 S4.02 S2.04 SCALE: 3/4" = 1'-0"

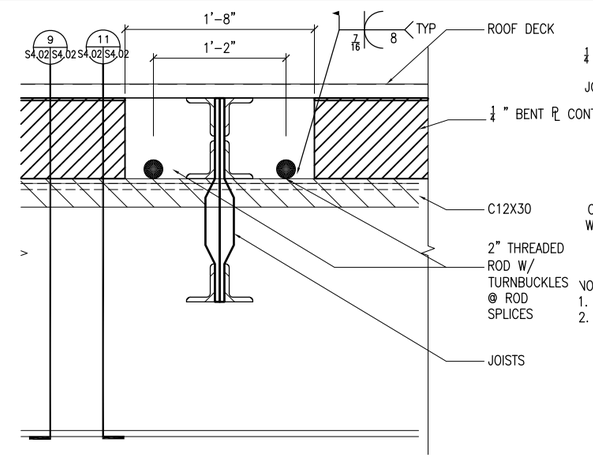

10 TYPICAL GRID 1 & 6 JOIST SEAT TIE
S4.02 S4.02 SCALE: 1 1/2"=1'-0"

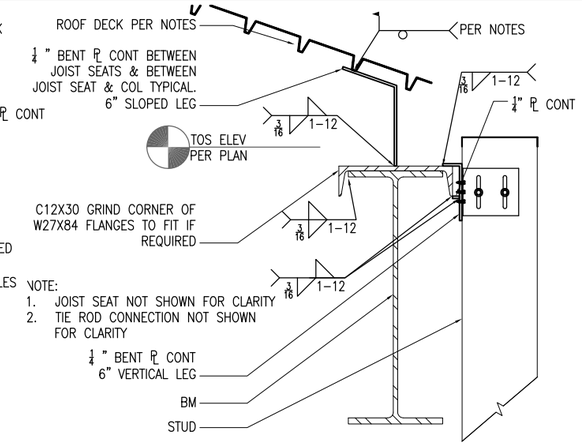

9 TYPICAL GRID 1 & 6 C12 TO W BM
S4.02 S4.02 SCALE: 1 1/2"=1'-0"

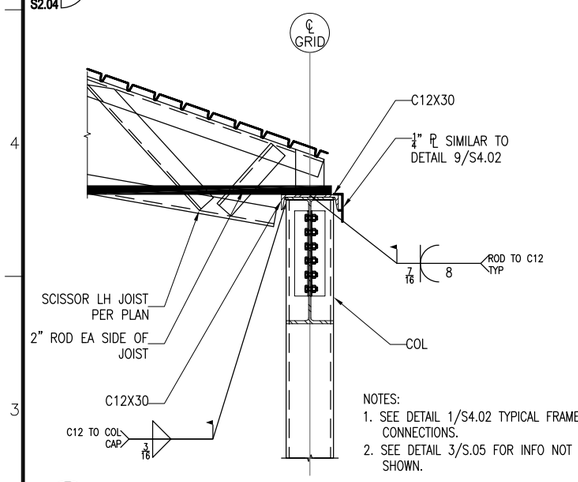

8 TYPICAL JOIST TIES @ COL ELEVATION
S4.02 S4.02 SCALE: 3/4" = 1'-0"

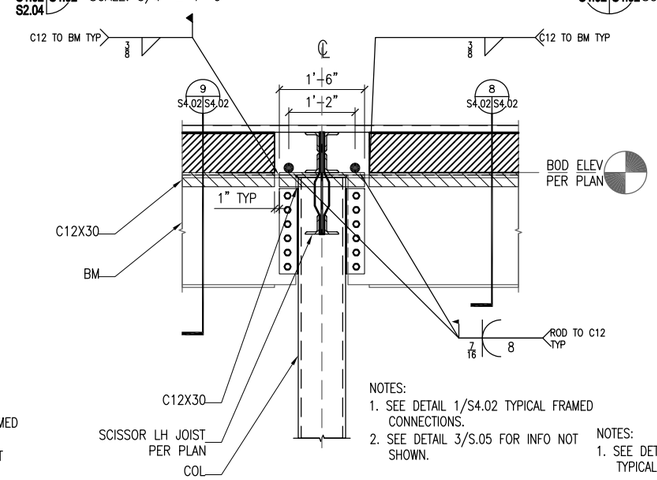

7 TYPICAL JOIST TIES @ COL SECTION
S1.02 S4.02 SCALE: 3/4"=1'-0"

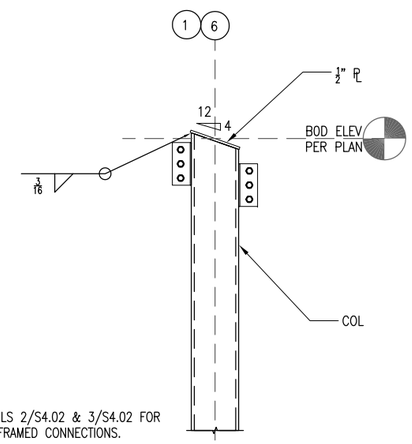

6 TYPICAL GRID A, H, I COL CAP
S4.02 S4.02 SCALE: 3/4"=1'-0"

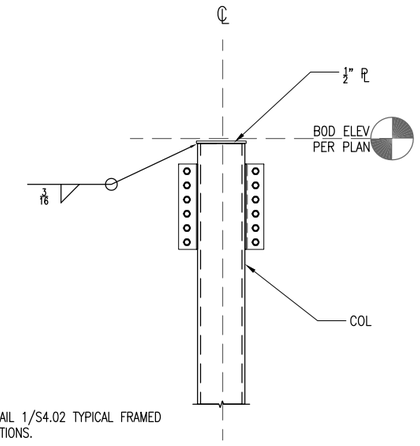

5 TYP GRID 1 & 6 COL CAP
S4.02 S4.02 SCALE: 3/4"=1'-0"

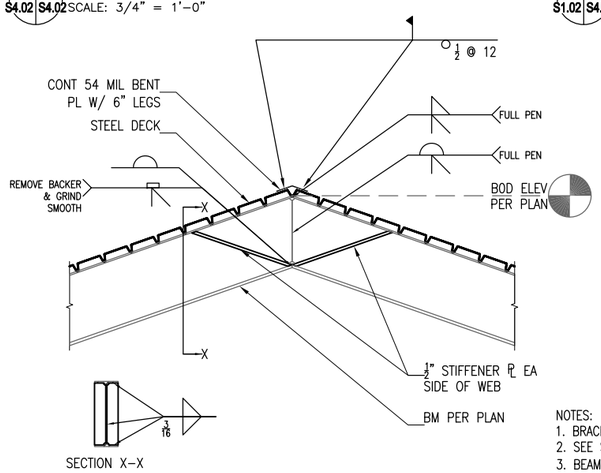

4 GRID A, GRID H, GRID I RIDGE CONNECTION
S1.02 S4.02 SCALE: 3/4" = 1'-0"

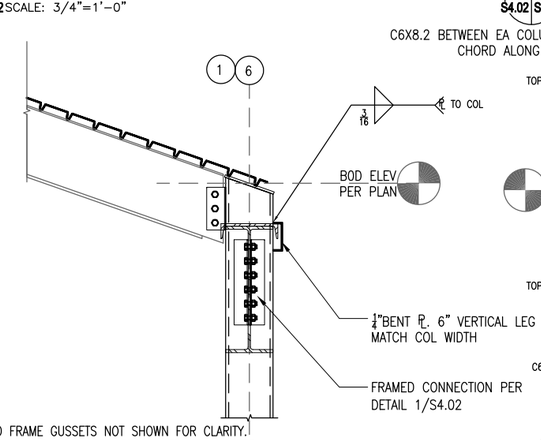

3 TYP FRAMED CONNECTION AT GRID A & H & I
S1.02 S4.02 SCALE: 3/4"=1'-0"

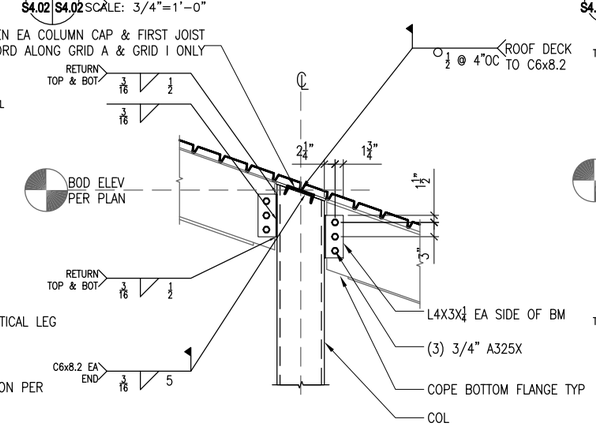

2 TYP FRAMED CONNECTION GRID A, GRID H, GRID I
S1.02 S4.02 SCALE: 3/4" = 1'-0"

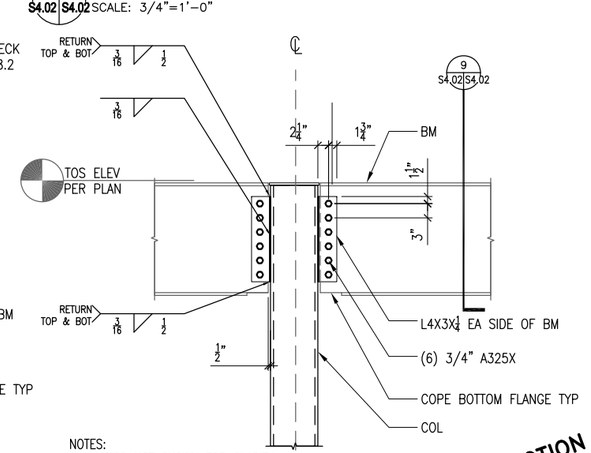

1 FRAMED BEAM CONNECTION GRID 1 & GRID 6
S4.02 S4.02 SCALE: 3/4" = 1'-0"

NOT FOR CONSTRUCTION
BACKCHECK

US ARMY CORPS OF ENGINEERS
ALASKA DISTRICT

CONTRACT NO. ___
CONTRACTOR ___
CITY ___ STATE ___
PRIME CONTRACTOR — Recommended:
RESIDENT ENGINEER — Approved:
Date:

Sym	Action	Description	Date	Appvd

U.S. ARMY ENGINEER DISTRICT
CORPS OF ENGINEERS
ANCHORAGE, ALASKA

Designed: SMH
Drawn: SMH
Reviewed: P. Lorn
Chief — Section
Submitted: D. Freiner
Chief — Branch
Date: 16 JULY 2009
Dwg Scale: AS NOTED
Plot Scale: 1:2
File: FTW336A-062-S4-02
Drawing No: F-211-13-01

INV. NO. W911KB-09-R-0007
PN 65076
FTW336A

FT. WAINWRIGHT, ALASKA
AIRCRAFT PARTS STORAGE
STRUCTURAL
DETAILS
FRAMING DETAILS 2

Reference number:
S4.02
Sheet 62 of 118

Drawing x:\UNIFIED\EN-TE\Jobs\FTW336A\Dwgs\FTW336A-062-S4-02.dwg last saved on 6/29/2009 7:20 AM was plotted by Curfew, Donald L POA on 7/17/2009 6:41 AM

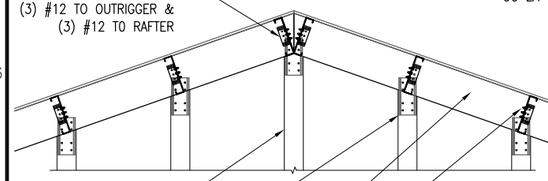

10 TYPICAL OVERFRAME STUD TO RAFTER
S4.03 S4.03 SCALE: 3/4" = 1'-0"

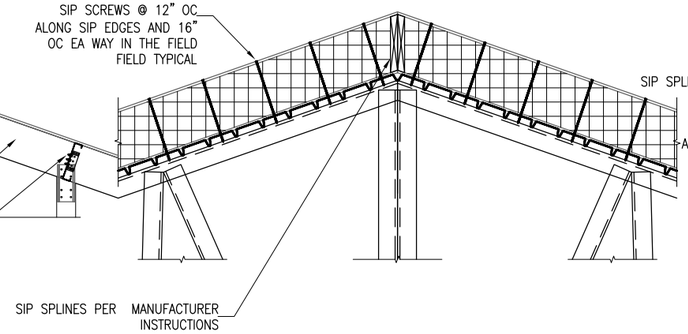

NOTES:
1. USE 14" HEAVY DUTY NO. 12 [.212" DIAMETER] SELF TAPPING SCREWS WITH .625" MIN. PANCAKE HEADS TYPICAL.

9 TYPICAL SANDWICH PANEL CONNECTION
S1.02 S4.03 SCALE: 3/4" = 1'-0"

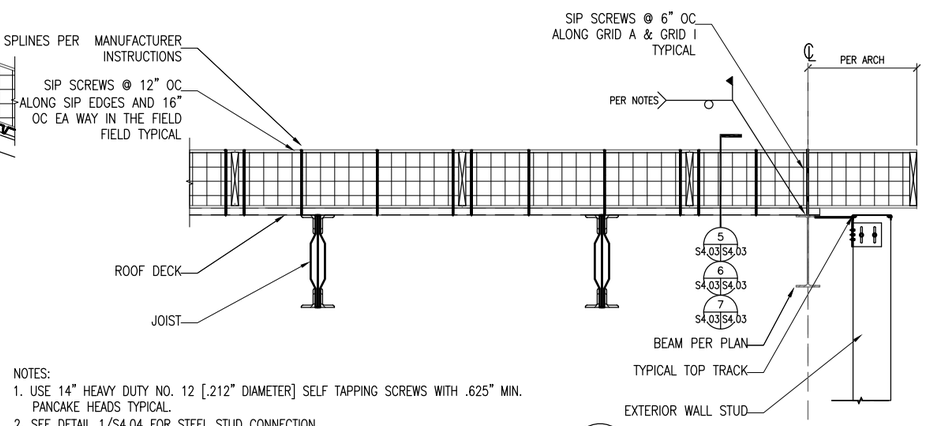

NOTES:
1. USE 14" HEAVY DUTY NO. 12 [.212" DIAMETER] SELF TAPPING SCREWS WITH .625" MIN. PANCAKE HEADS TYPICAL.
2. SEE DETAIL 1/S4.04 FOR STEEL STUD CONNECTION.

8 TYP GRID A & GRID I OUTRIGGER FRAMING
S1.02 S4.03 SCALE: 3/4"=1'-0"

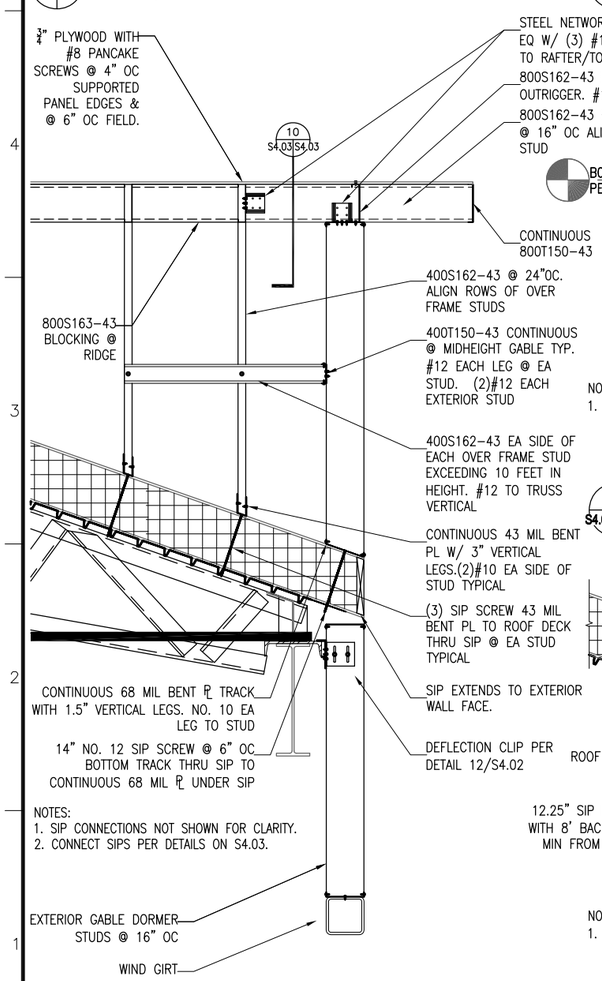

NOTES:
1. SIP CONNECTIONS NOT SHOWN FOR CLARITY.
2. CONNECT SIPS PER DETAILS ON S4.03.

4 TYPICAL GRID 1 & GRID 6 OVERFRAMING
S1.02 S4.03 SCALE: 3/4" = 1'-0"

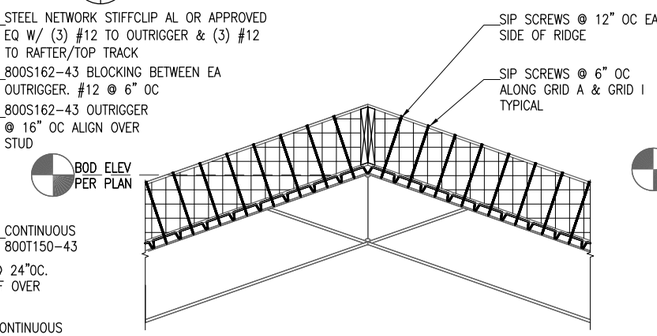

NOTES:
1. USE 14" HEAVY DUTY NO. 12 [.212" DIAMETER] SELF TAPPING SCREWS WITH .625" MIN. PANCAKE HEADS TYPICAL.

7 TYP. GRID A & GRID i RIDGE SIP CONNECTION
S4.03 S4.03 SCALE: 3/4"=1'-0"

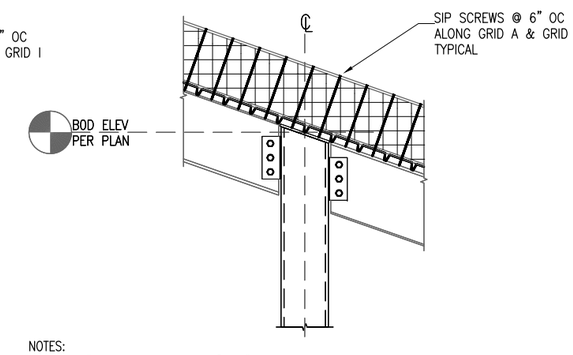

NOTES:
1. USE 14" HEAVY DUTY NO. 12 [.212" DIAMETER] SELF TAPPING SCREWS WITH .625" MIN. PANCAKE HEADS TYPICAL.

6 TYPICAL GRID A & GRID I SIP CONNECTION
S4.03 S4.03 SCALE: 3/4"=1'-0"

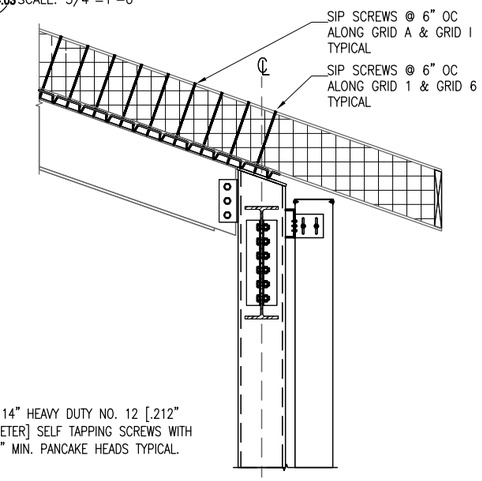

NOTES:
1. USE 14" HEAVY DUTY NO. 12 [.212" DIAMETER] SELF TAPPING SCREWS WITH .625" MIN. PANCAKE HEADS TYPICAL.

5 TYP GRID A & GRID I SIP CONNECTION
S4.03 S4.03 SCALE: 3/4"=1'-0"

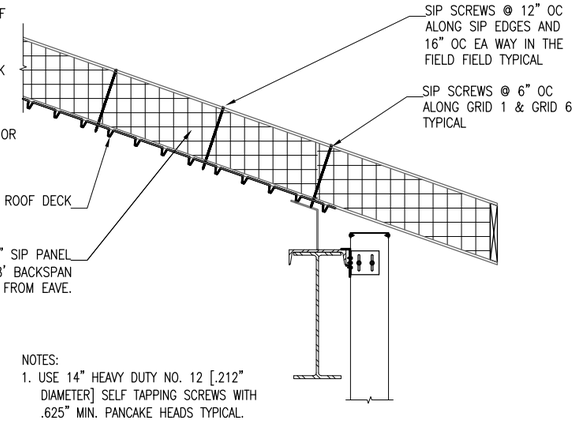

NOTES:
1. USE 14" HEAVY DUTY NO. 12 [.212" DIAMETER] SELF TAPPING SCREWS WITH .625" MIN. PANCAKE HEADS TYPICAL.

3 TYP GRID 1 AND GRID 6 SIP CONNECTIONS
S1.02 S4.03 SCALE: 3/4"=1'-0"

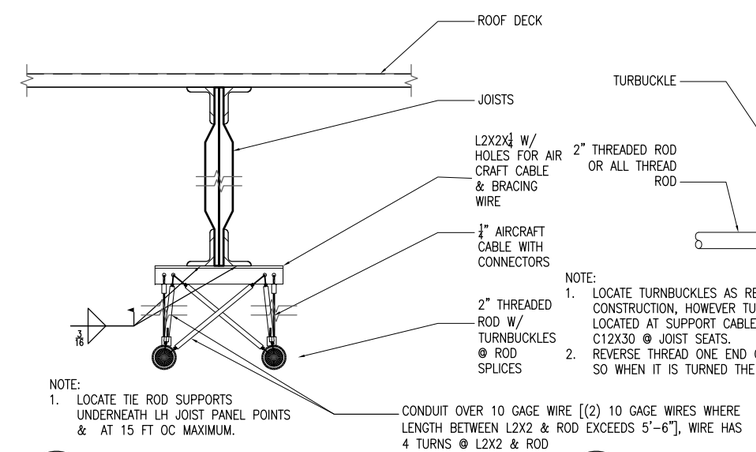

NOTE:
1. LOCATE TIE ROD SUPPORTS UNDERNEATH LH JOIST PANEL POINTS & AT 15 FT OC MAXIMUM.

2 TYPICAL TIE ROD SUPPORT @ JOIST
S4.03 S4.03 SCALE: 1 1/2"=1'-0"

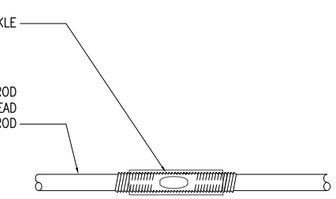

NOTE:
1. LOCATE TURNBUCKLES AS REQUIRED FOR EASE OF CONSTRUCTION, HOWEVER TURNBUCKLES SHOULD BE LOCATED AT SUPPORT CABLES OR DIRECTLY ADJACENT TO C12X30 @ JOIST SEATS.
2. REVERSE THREAD ONE END OF RODS AT THE TURNBUCKLE SO WHEN IT IS TURNED THE RODS WILL BE TAUGHT.

1 TYPICAL JOIST TIE ROD SPLICE
S4.03 S4.03 SCALE: 1 1/2"=1'-0"

NOT FOR CONSTRUCTION
BACKCHECK

US ARMY CORPS OF ENGINEERS
ALASKA DISTRICT

CONTRACT NO. ___
CONTRACTOR ___
CITY ___ STATE ___
PRIME CONTRACTOR — Recommended: ___
RESIDENT ENGINEER — Approved: ___ Date: ___

Symb	Action	Description	Date	Appvd

U.S. ARMY ENGINEER DISTRICT
CORPS OF ENGINEERS
ANCHORAGE, ALASKA

Designed: SMH
Drawn: SMH
Reviewed: P. Lum
Chief — CEPOA-EN-TE-SA — Section
Submitted: D. Trenter
Chief — CEPOA-EN-CW-ED — Branch
Date: 16 JULY 2009
Dwg Scale: AS NOTED
Plot Scale: 1:2
File: FTW336A-063-S4-03
Drawing #: F-2211-13-01

INV. NO. W911KB-09-R-0007
PN 65076
FTW336A

FT. WAINWRIGHT, ALASKA
AIRCRAFT PARTS STORAGE
STRUCTURAL
DETAILS
FRAMING DETAILS 3

Reference number:
S4.03

Drawing x:\UNIFIED\EN-TE\Jobs\FTW336A\Dwgs\FTW336A-063-S4-03.dwg last saved on 6/29/2009 7:21 AM was plotted by Curfew, Donald L POA on 7/17/2009 6:42 AM

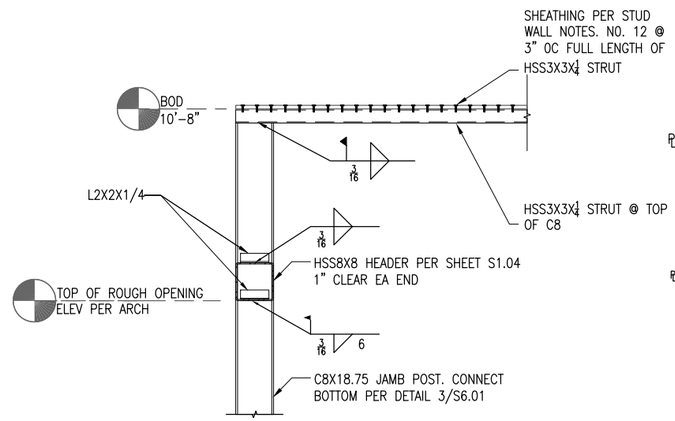

7 EXTERIOR ENTRY DOOR HEADER TO JAMB POST
S1.04 S4.04 SCALE: 3/4" = 1'-0"

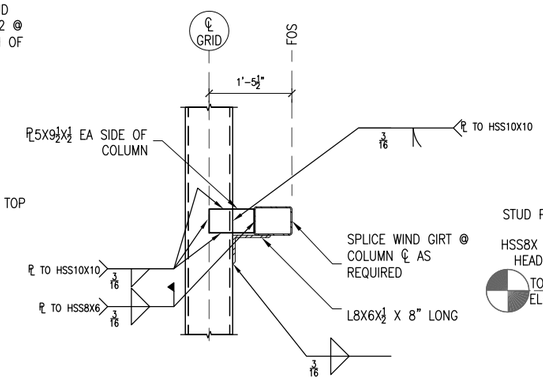

6 TYP. WIND GIRT TO COLUMN
S2.03 S4.04 SCALE: 3/4" = 1'-0"

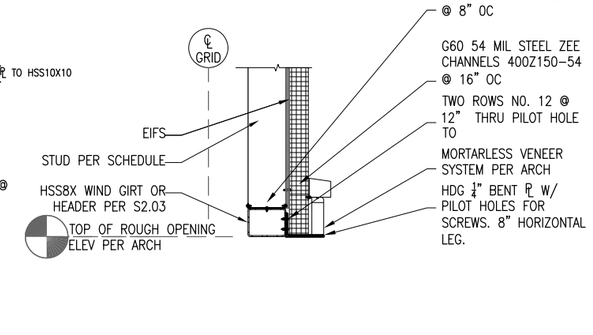

5 GRID I WIND GIRT @ WINDOW OPENING
S2.03 S2.04 S4.04 SCALE: 3/4" = 1'-0"

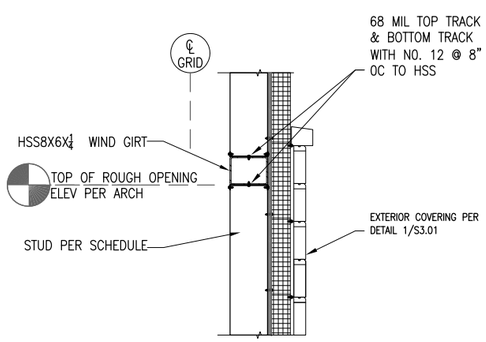

4 TYP. GRID I STUDS TO WIND GIRT
S2.03 S4.04 SCALE: 3/4" = 1'-0"

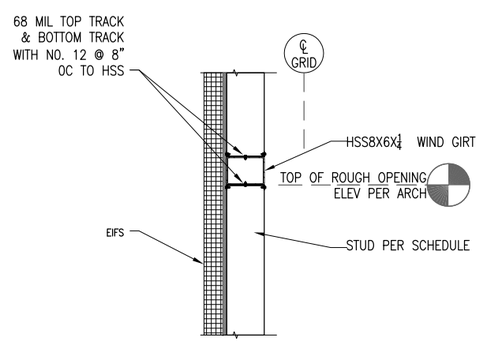

3 TYP. GRID A STUDS TO WIND GIRT
S2.03 S4.04 SCALE: 3/4" = 1'-0"

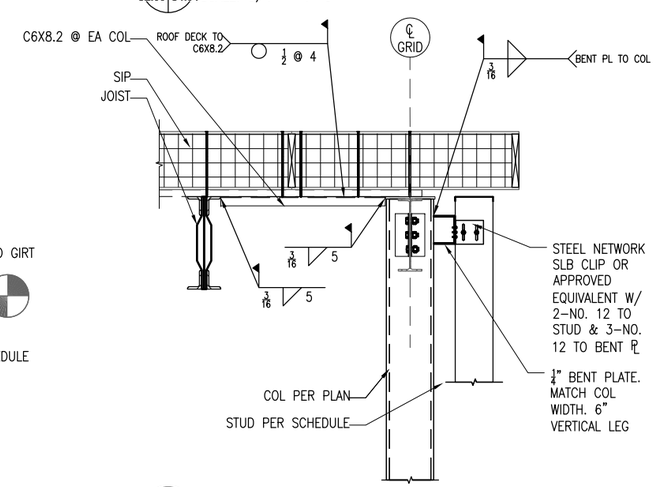

2 TYP. GRID A & I TOP OF COL
S1.02 S4.04 SCALE: 3/4" = 1'-0"

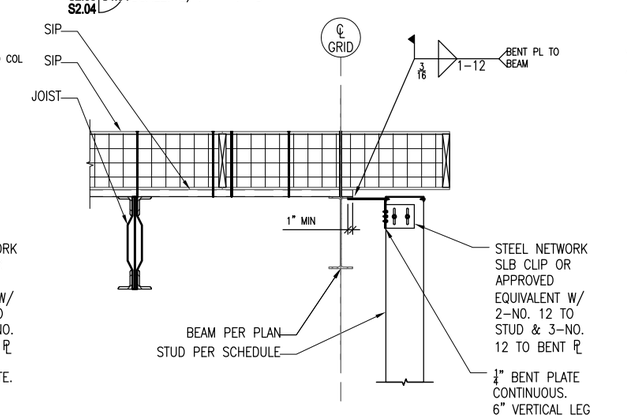

1 TYP. GRID A & I EDGE ANGLE TO BM
S1.02 S4.04 S2.04 SCALE: 3/4" = 1'-0"

NOT FOR CONSTRUCTION
BACKCHECK

US ARMY CORPS OF ENGINEERS
ALASKA DISTRICT

CONTRACT NO. ___
CONTRACTOR ___
CITY ___ STATE ___
PRIME CONTRACTOR ___ Recommended: ___
RESIDENT ENGINEER ___ Approved: ___ Date: ___

Symb	Action	Description	Date	Appvd

U.S. ARMY ENGINEER DISTRICT
CORPS OF ENGINEERS
ANCHORAGE, ALASKA

Designed: SMH
Drawn: SMH
Reviewed: P. Lum
Chief — CPGA-Dn-R-SA Section
Submitted: D. Frenier
Chief — Design Section
Date: 16 JULY 2009
Dwg Scale: AS NOTED
Plot Scale: 1:2
File: FTW336A-064-S4-04
Drawing #: F-211-13-01

INV. NO. W911KB-09-R-0007
PN 65076
FTW336A

FT. WAINWRIGHT, ALASKA
AIRCRAFT PARTS STORAGE
STRUCTURAL
DETAILS
FRAMING DETAILS 4

Reference number:
S4.04
Sheet 64 of 118

Drawing x:\UNIFIED\EN-TE\Jobs\FTW336A\Dwgs\FTW336A-064-S4-04.dwg last saved on 6/29/2009 7:21 AM was plotted by Curfew, Donald L POA on 7/17/2009 6:42 AM

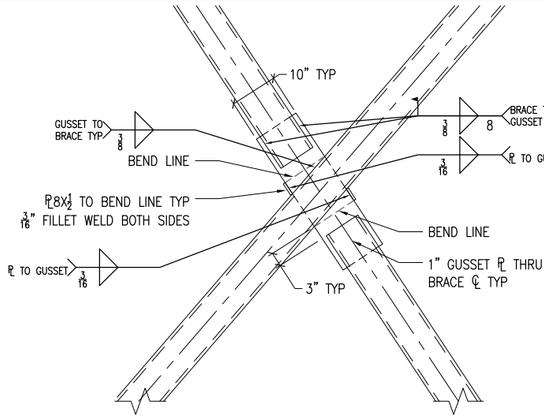

12 X-BRACE GUSSET GRID A BETWEEN GRIDS 1 & 2
S2.01 S5.01 SCALE: 3/4" = 1'-0"

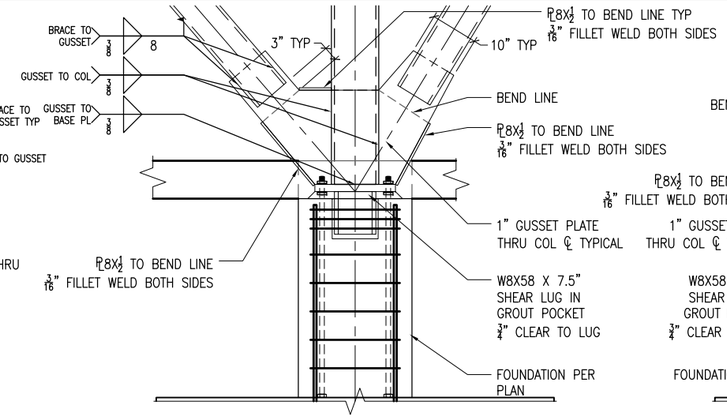

NOTE:
1) SEE 1/S3.03 FOR BASE PLATE & ANCHOR ROD INFORMATION.

11 GRID 5-GRID A BASE PLATE
S2.01 S5.01 SCALE: 3/4" = 1'-0"

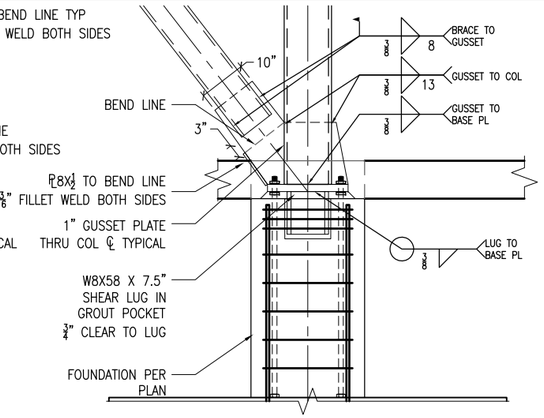

NOTE:
1) SEE 1/S3.03 FOR BASE PLATE & ANCHOR ROD INFORMATION.

10 GRID 4-GRID A BASE PLATE
S2.01 S5.01 SCALE: 3/4" = 1'-0"

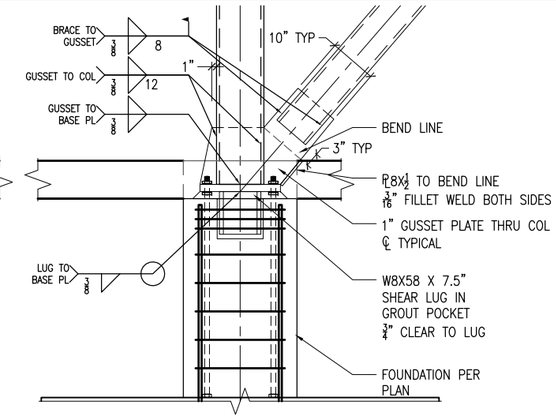

NOTE:
1) SEE 1/S3.03 FOR BASE PLATE & ANCHOR ROD INFORMATION.

9 GRID 2-GRID A BASE PLATE
S2.01 S5.01 SCALE: 3/4" = 1'-0"

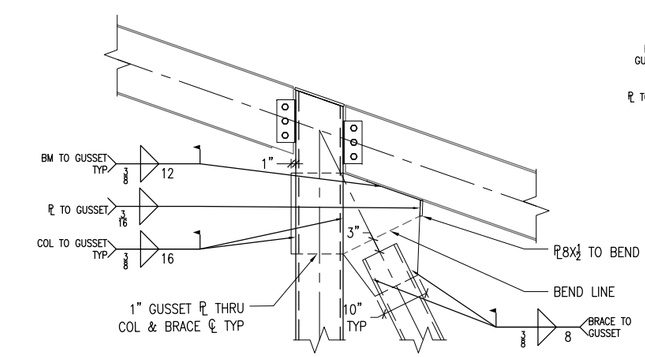

NOTE:
1) SEE 2/S4.02 FOR TYPICAL FRAMED BEAM CONNECTION.

8 GRID 2.7-GRID H GUSSET
S2.01 S5.01 SCALE: 3/4" = 1'-0"

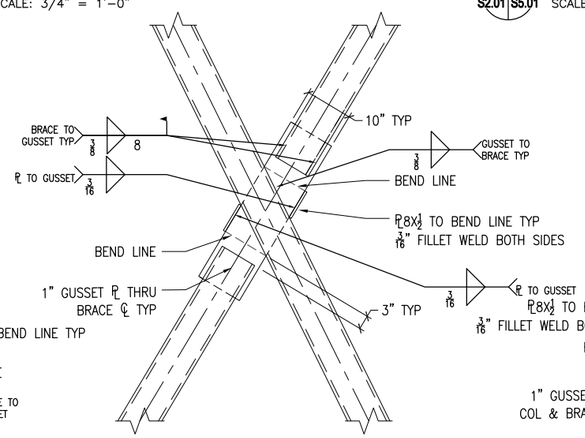

7 X-BRACE GUSSET GRID H BETWEEN GRIDS 2 & 2.7
S2.01 S5.01 SCALE: 3/4" = 1'-0"

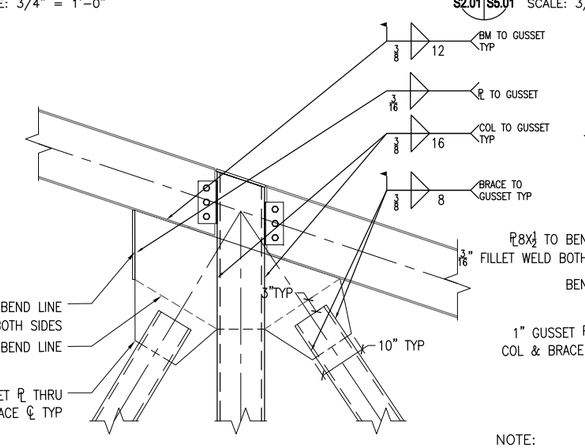

NOTE:
1) SEE 2/S4.02 FOR TYPICAL FRAMED BEAM CONNECTION.

6 GRID 2-GRID H GUSSET
S2.01 S5.01 SCALE: 3/4" = 1'-0"

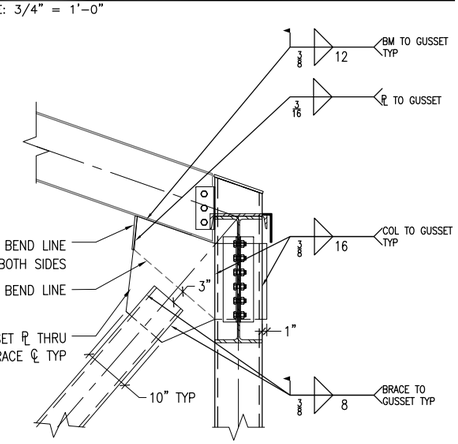

NOTE:
1) SIMILAR GUSSET AT INTERSECTIONS GRIDS 6-H, 1-A & 6-A.
2) SEE DETAIL 3/S4.02 FOR TYPICAL FRAMED CONNECTION AT EAVE.

5 GRID 1 – GRID H GUSSET
S2.01 S5.01 SCALE: 3/4" = 1'-0"

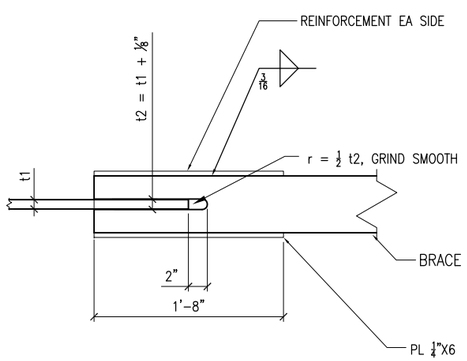

NOTE:
REINFORCEMENT TYPICAL AT ALL BRACE NOTCHES
t1=GUSSET WIDTH, t2=NOTCH WIDTH

4 TYPICAL BRACE NOTCH
S2.01 S5.01 SCALE: 1 1/2" = 1'-0"

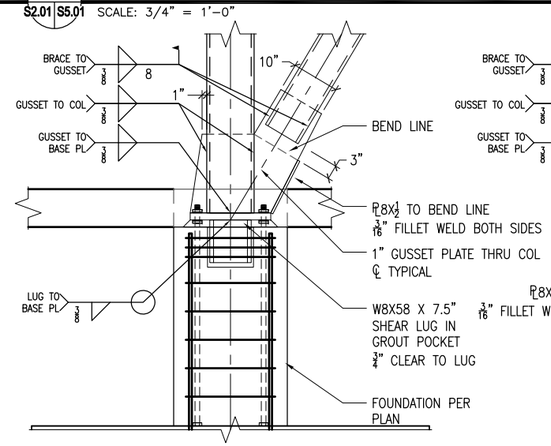

NOTE:
1) SEE 1/S3.03 FOR BASE PLATE & ANCHOR ROD INFORMATION.

3 GRID 2.7-GRID H BASE PLATE
S2.01 S5.01 SCALE: 3/4" = 1'-0"

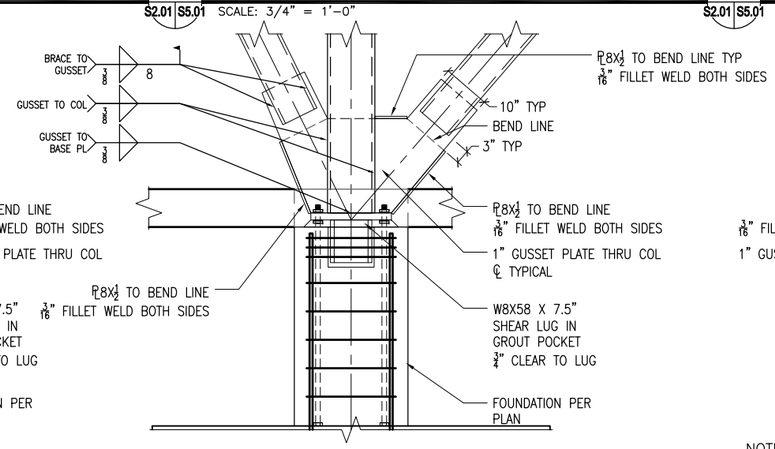

NOTE:
1) SEE 1/S3.03 FOR BASE PLATE & ANCHOR ROD INFORMATION.

2 GRID 2-GRID H BASE PLATE
S2.01 S5.01 SCALE: 3/4" = 1'-0"

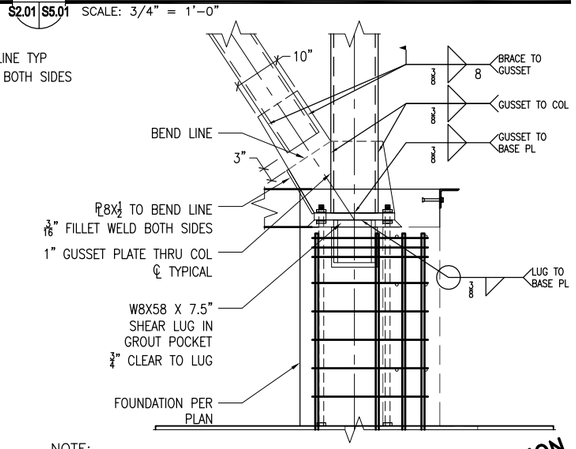

NOTE:
1) SIMILAR AT INTERSECTION OF GRIDS 6-H, 1-A, 6-A.
2) SEE 1/S3.03 FOR BASE PLATE & ANCHOR ROD INFORMATION.

1 GRID 1-GRID H BASE PLATE
S2.01 S5.01 SCALE: 3/4" = 1'-0"

NOT FOR CONSTRUCTION
BACKCHECK

US ARMY CORPS OF ENGINEERS
ALASKA DISTRICT

CONTRACT NO. _____
CONTRACTOR _____
CITY _____ STATE _____
PRIME CONTRACTOR — Recommended: _____
RESIDENT ENGINEER — Approved: _____ Date: _____

Symb	Action	Description	Date	Appvd

U.S. ARMY ENGINEER DISTRICT
CORPS OF ENGINEERS
ANCHORAGE, ALASKA

Designed: SMH
Drawn: SMH
Reviewed: P. Lam
Chief – Grphics-Fac-H-3/4 – Section
Submitted: D. Frenier
Chief – Design Section
Date: 16 JULY 2009
Dwg Scale: AS NOTED
Plot Scale: 1:2
Dwg: FTW336A-065-S5-01
Drawing # F-211-13-01

INV. NO. W911KB-09-R-0007
PN 65076
FTW336A

FT. WAINWRIGHT, ALASKA
AIRCRAFT PARTS STORAGE
STRUCTURAL
DETAILS
BRACED FRAME CONNECTION DETAILS 1

Reference number:
S5.01

Drawing x:\UNIFIED\EN-TE\Jobs\FTW336A\Dwgs\FTW336A-065-S5-01.dwg last saved on 7/1/2009 2:56 PM was plotted by Curfew, Donald L POA on 7/17/2009 6:42 AM

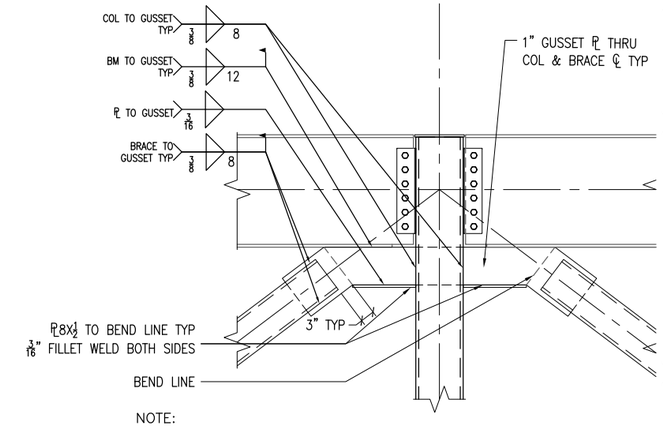

NOTE:
1) SIMILAR AT INTERSECTION OF GRIDS 1–D, 6–E & 6–F.
2) SEE 1/S4.02 FOR TYPICAL FRAMED BEAM CONNECTION.

9 GRID 1–GRID E GUSSET
S2.02 S5.02 SCALE: 3/4" = 1'–0"

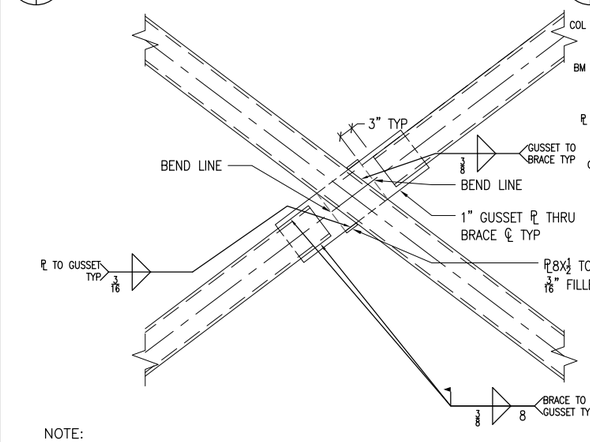

NOTE:
1) X–BRACE GUSSETS SIMILAR ON GRID 1 AND ON GRID 6.

8 X–BRACE GUSSET GRID 1 AND GRID 6
S2.02 S5.02 SCALE: 3/4" = 1'–0"

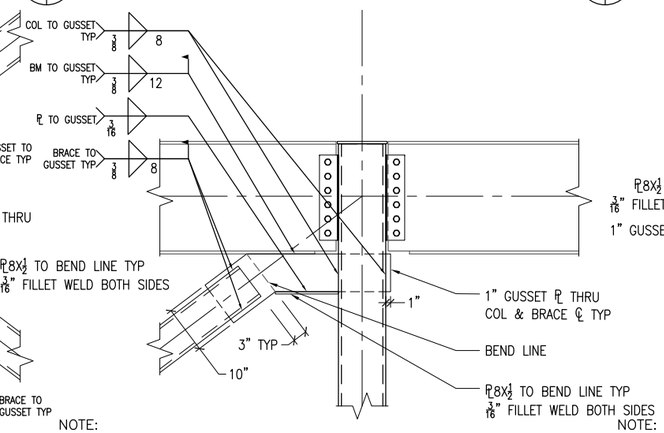

NOTE:
1) SIMILAR AT INTERSECTION OF GRIDS 1–C, 6–D, 6–G.
2) SEE 1/S4.02 FOR TYPICAL FRAMED BEAM CONNECTION.

7 GRID 1–GRID F GUSSET
S2.02 S5.02 SCALE: 3/4" = 1'–0"

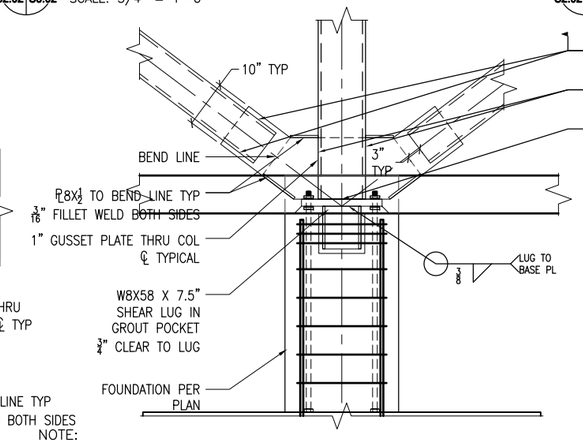

NOTE:
1) SIMILAR BASEPLATE AT INTERSECTION OF GRIDS 1–D, 6–E & 6–F.
2) SEE 1/S3.03 FOR BASE PLATE & ANCHOR ROD INFORMATION.

6 GRID 1 –GRID E BASE PLATE
S2.02 S5.02 SCALE: 3/4" = 1'–0"

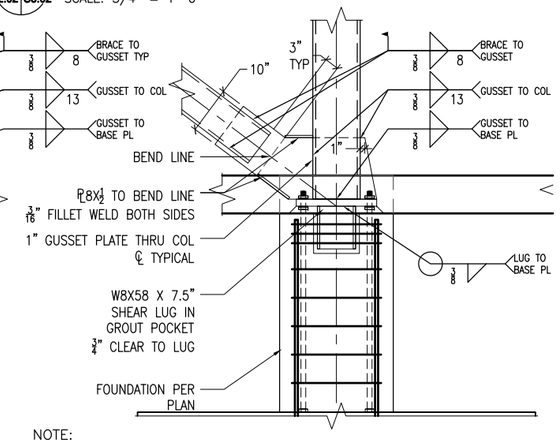

NOTE:
1) SIMILAR BASEPLATE AT INTERSECTION OF GRIDS 1–C, 6–D & 6–G.
2) SEE 1/S3.03 FOR BASE PLATE & ANCHOR ROD INFORMATION.

5 GRID 1 – GRID F BASE PLATE
S2.02 S5.02 SCALE: 3/4" = 1'–0"

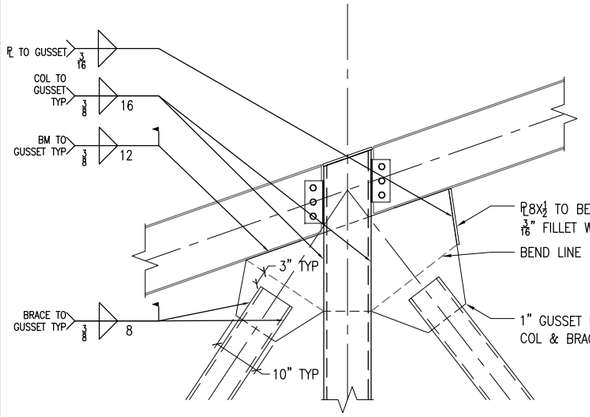

NOTE:
1) SEE 2/S4.02 FOR TYPICAL FRAMED BEAM CONNECTION.

4 GRID 5–GRID A GUSSET
S2.01 S5.02 SCALE: 3/4" = 1'–0"

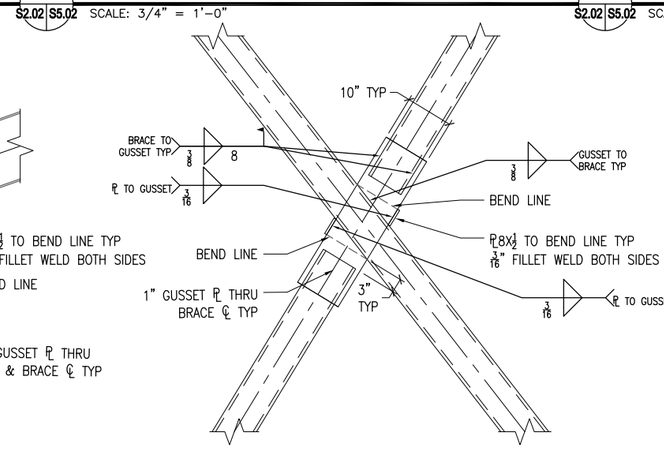

NOTE:
1) SEE 2/S4.02 FOR TYPICAL FRAMED BEAM CONNECTION.

3 X–BRACE GUSSET GRID A BETWEEN GRIDS 4&5
S2.01 S5.02 SCALE: 3/4" = 1'–0"

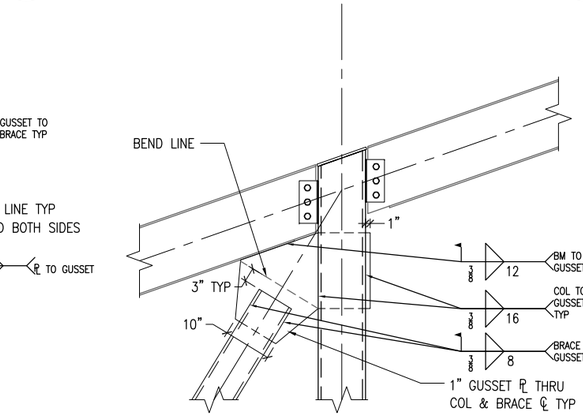

NOTE:
1) SEE 2/S4.02 FOR TYPICAL FRAMED BEAM CONNECTION.

2 GRID 4–GRID A GUSSET
S2.01 S5.02 SCALE: 3/4" = 1'–0"

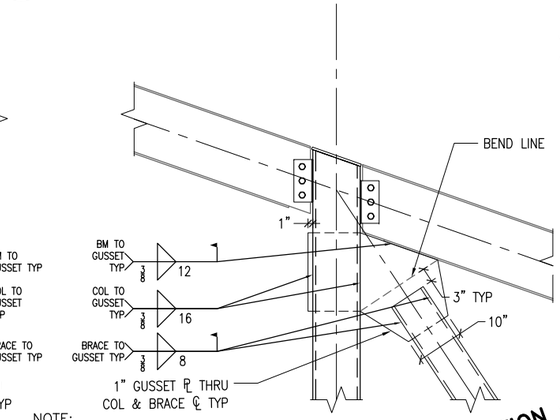

NOTE:
1) SIMILAR AT INTERSECTION OF GRIDS 5–H.
2) SEE 2/S4.02 FOR TYPICAL FRAMED BEAM CONNECTION.

1 GRID 2–GRID A GUSSET
S2.01 S5.02 SCALE: 3/4" = 1'–0"

NOT FOR CONSTRUCTION
BACKCHECK

US ARMY CORPS OF ENGINEERS
ALASKA DISTRICT

CONTRACT NO. ___
CONTRACTOR ___
CITY ___ STATE ___
PRIME CONTRACTOR ___ Recommended: ___
RESIDENT ENGINEER ___ Approved: ___ Date: ___

Symb	Action	Description	Date	Appvd

U.S. ARMY ENGINEER DISTRICT
CORPS OF ENGINEERS
ANCHORAGE, ALASKA

Designed: SMH
Drawn: SMH
Reviewed: P. Lam
Chief — Section
Submitted: D. Frenier
Chief — Branch
Date: 16 JULY 2009
Dwg Scale: AS NOTED
Plot Scale: 1:2
File: FTW336A-066_S5_02
Drawing No: F-211-13-01

INV. NO. W911KB-09-R-0007
PN 65076
FTW336A

FT. WAINWRIGHT, ALASKA
AIRCRAFT PARTS STORAGE
STRUCTURAL
DETAILS
BRACED FRAME CONNECTION DETAILS 2

Reference number:
S5.02

Drawing x:\UNIFIED\EN-TE\Jobs\FTW336A\Dwgs\FTW336A-066-S5-02.dwg last saved on 7/1/2009 2:55 PM was plotted by Curfew, Donald L POA on 7/17/2009 6:42 AM

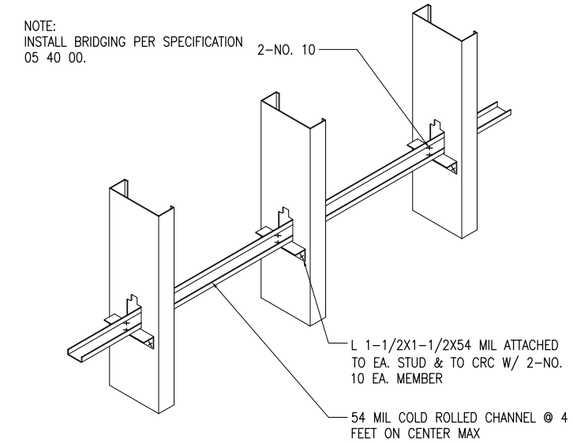

12 TYP. COLD ROLLED CHANNEL STUD BRIDGING
S6.01 S6.01 SCALE: 1 1/2" = 1'-0"

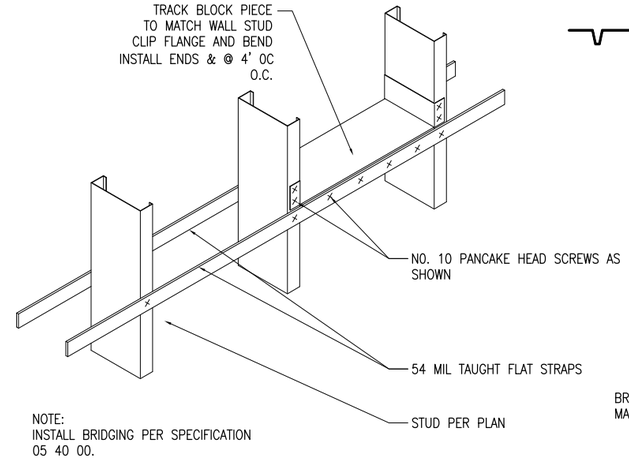

11 TYP. ALTERNATE STUD BRIDGING
S6.01 S6.01 SCALE: 1 1/2" = 1'-0"

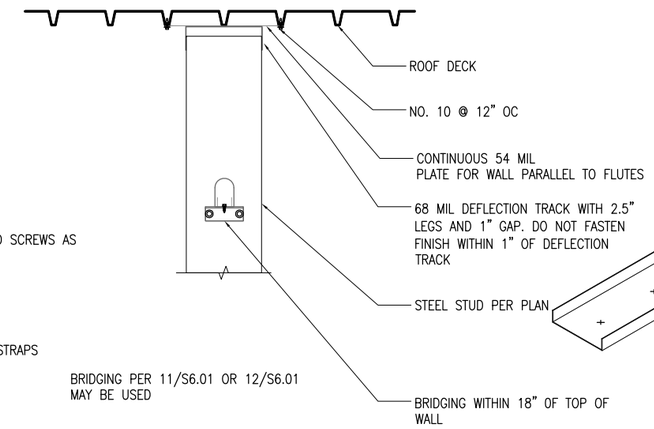

10 TYPICAL PARTITION WALL DEFLECTION TRACK
S6.01 S6.01 SCALE: 1 1/2" = 1'-0"

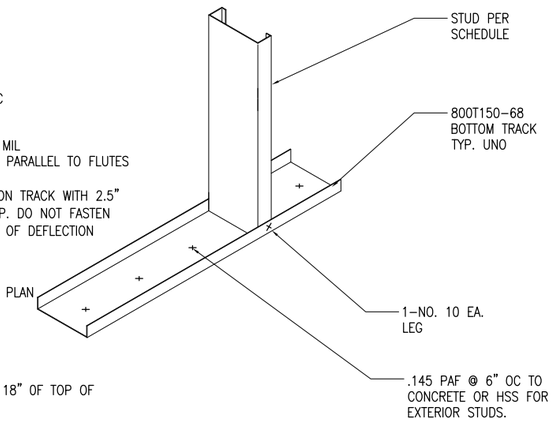

9 TYPICAL EXTERIOR WALL STUD BASE TRACK
S6.01 S6.01 SCALE: 1 1/2" = 1'-0"

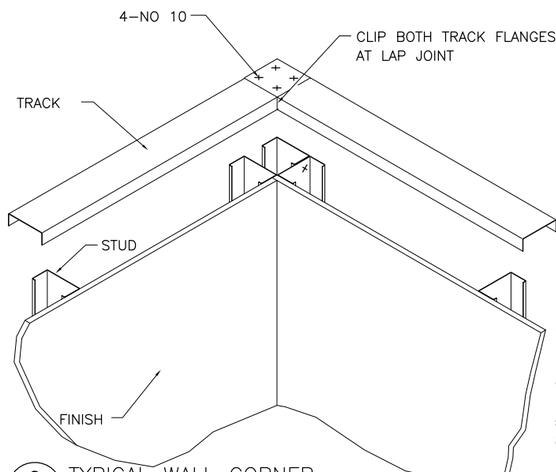

8 TYPICAL WALL CORNER
S6.01 S6.01 SCALE: 1 1/2" = 1'-0"

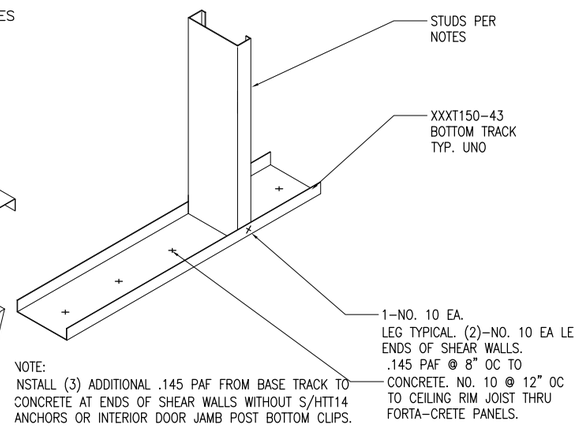

7 TYPICAL INTERIOR WALL STUD BASE TRACK
S6.01 S6.01 SCALE: 1 1/2" = 1'-0"

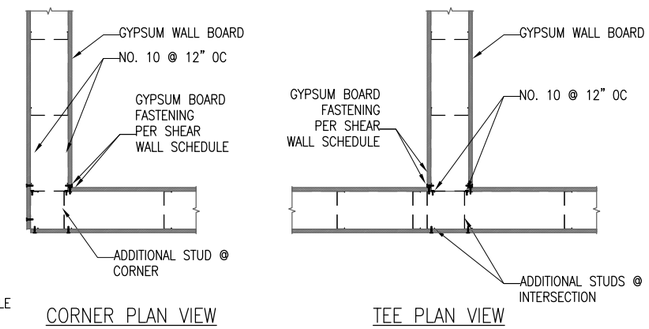

6 TYPICAL GWB SHEAR WALL CORNER / TEE
S6.01 S6.01 SCALE: 3/4" = 1'-0"

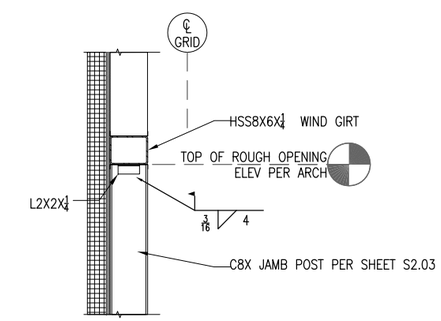

5 TYP. GRID A&I JAMB CONNECTION @ GIRT
S6.03 S6.01 SCALE: 3/4" = 1'-0"

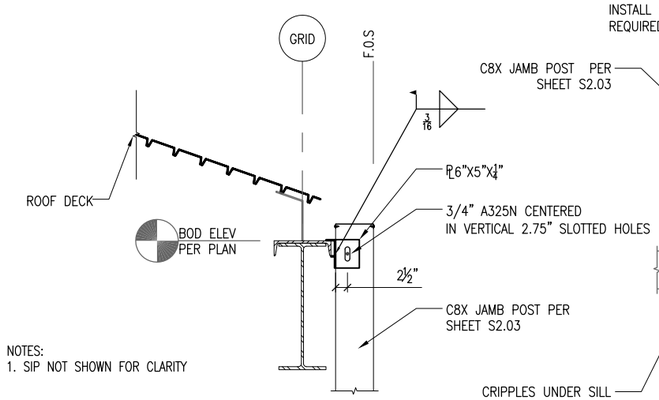

4 TYP. EXTERIOR JAMB POST TO EDGE ANGLE
S6.02 S6.01 S6.03 SCALE: 3/4" = 1'-0"

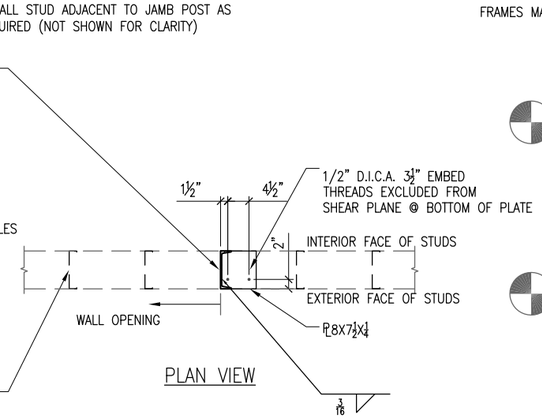

3 EXTERIOR WALL JAMB TO FOUNDATION
S6.01 S6.01 SCALE: NTS

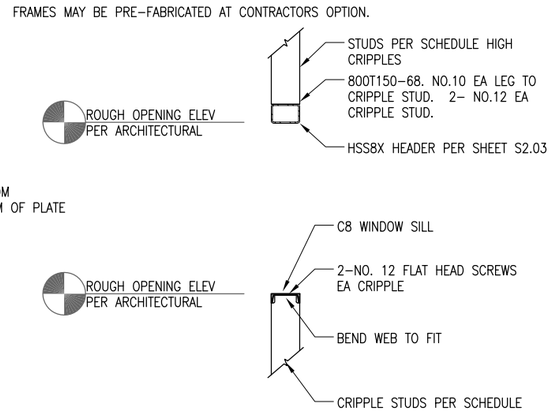

2 TYPICAL CRIPPLE STUD TO OPENING FRAME
S6.01 S6.01 SCALE: 3/4" = 1'-0"

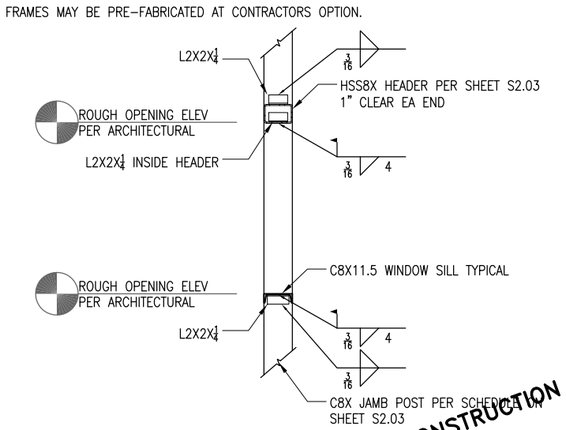

1 TYPICAL EXTERIOR HEADER/SILL TO JAMB
S6.01 S6.01 SCALE: 3/4" = 1'-0"

NOT FOR CONSTRUCTION
BACKCHECK

US ARMY CORPS OF ENGINEERS
ALASKA DISTRICT

CONTRACT NO. _____
CONTRACTOR _____
CITY _____ STATE _____
PRIME CONTRACTOR _____
Recommended: _____
RESIDENT ENGINEER _____
Approved: _____
Date: _____

Mod.	Action	Description	Date	Appvd

U.S. ARMY ENGINEER DISTRICT
CORPS OF ENGINEERS
ANCHORAGE, ALASKA

Designed: SMH
Drawn: SMH
Reviewed: P. Lorn
Chief: — CEPOA-TE-TE-SA — Section
Submitted: D. Frenier
Chief: — CEPOA-TE-TE — Branch
Date: 16 JULY 2009
Dwg Scale: AS NOTED
Plot Scale: 1:2
File: FTW336A-067-S6-01
Drawing: W-F-211-13-01

INV. NO. W911KB-09-R-0007
PN 65076
FTW336A

FT. WAINWRIGHT, ALASKA
AIRCRAFT PARTS STORAGE
STRUCTURAL
DETAILS
STUD WALL DETAILS 1

Reference number:
S6.01

Drawing x:\UNIFIED\EN-TE\Jobs\FTW336A\Dwgs\FTW336A-067-S6-01.dwg last saved on 6/26/2009 11:03 AM was plotted by Curfew, Donald L POA on 7/17/2009 6:42 AM

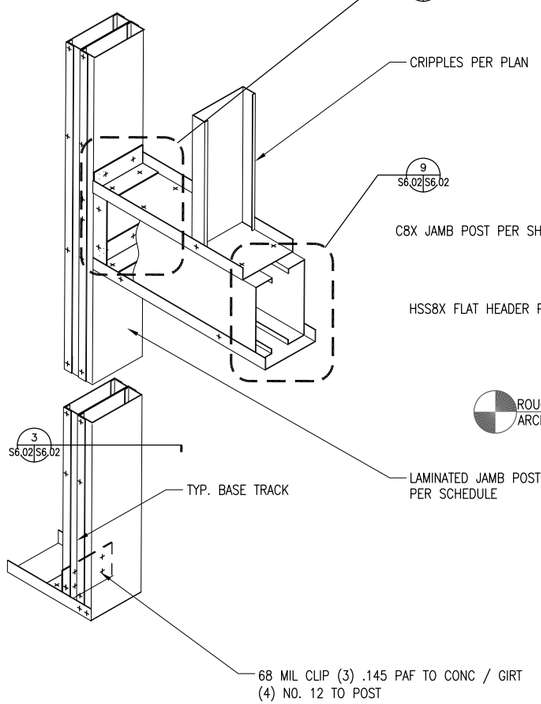

8 TYP INTERIOR DOOR FRAMING
S6.02 S6.02 SCALE: NTS

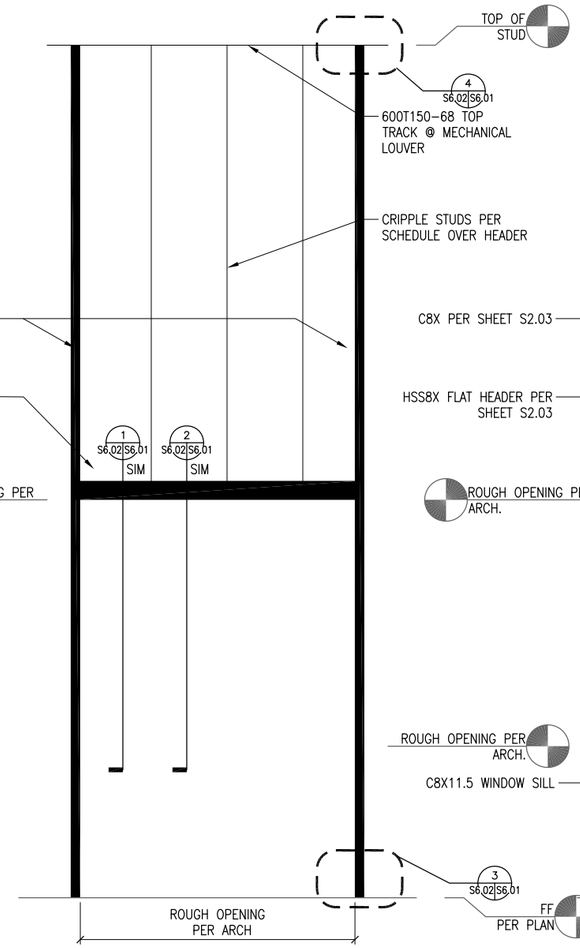

7 TYPICAL EXTERIOR DOOR OPENING FRAMING
S6.02 S6.02 SCALE: NTS

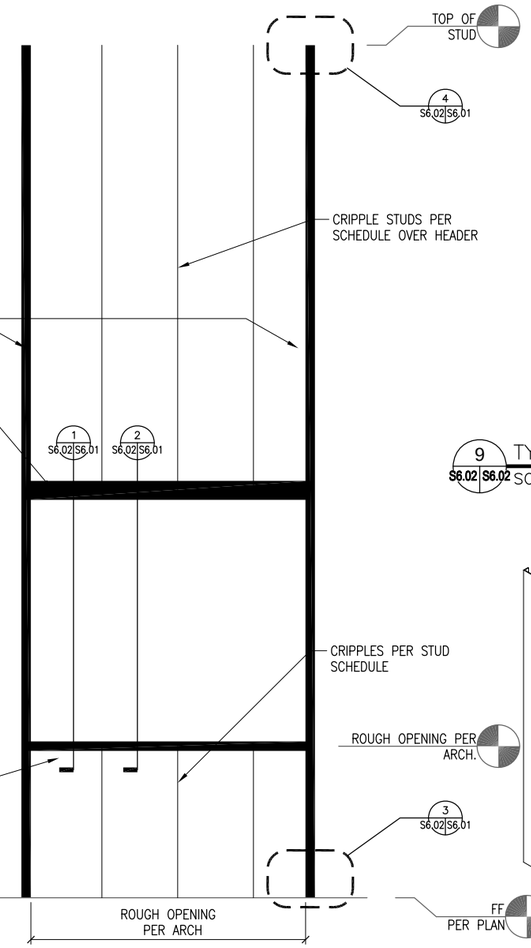

6 TYPICAL GLAZED EXTERIOR WALL OPENING ELEVATION
S6.02 S6.02 SCALE: NTS

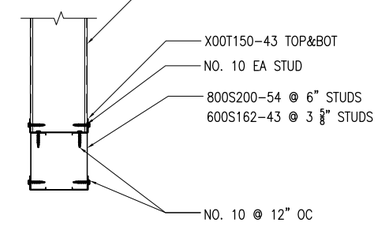

9 TYPICAL INTERIOR WALL OPENING HEADER
S6.02 S6.02 SCALE: 1 1/2" = 1'-0"

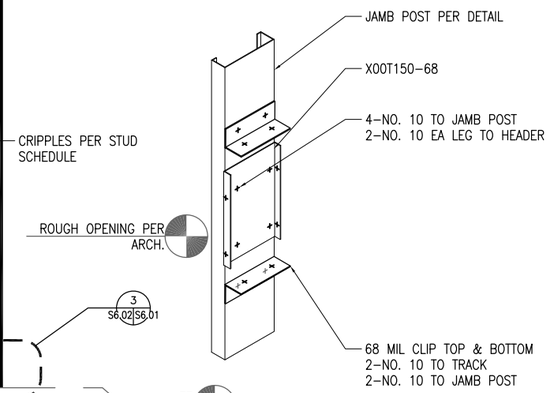

5 TYP. INTERIOR OPENING HEADER CONNECTIONS
S6.02 S6.02 SCALE: 1 1/2" = 1'-0"

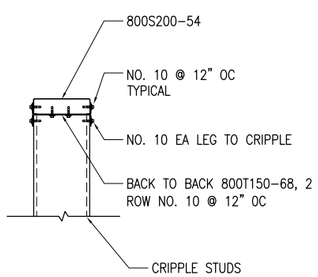

4 MECHANICAL LOUVER SILL
S6.03 S6.02 SCALE: 1 1/2" = 1'-0"

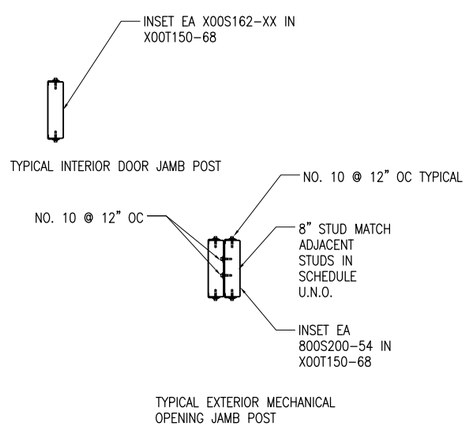

3 LAMINATED JAMB POSTS
S6.02 S6.02 S6.03 SCALE: 1 1/2" = 1'-0"

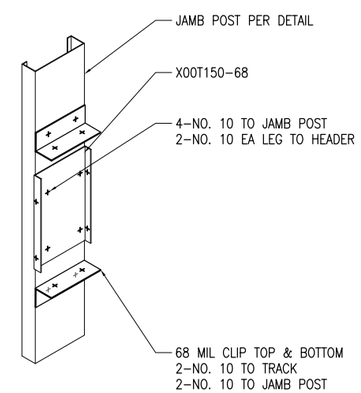

2 MECHANICAL OPENING HEADER CONNECTION
S6.03 S6.02 SCALE: 1 1/2" = 1'-0"

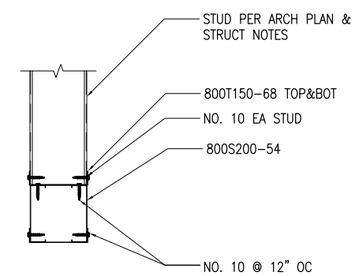

1 MECHANICAL OPENING HEADER
S6.03 S6.02 SCALE: 1 1/2" = 1'-0"

NOT FOR CONSTRUCTION
BACKCHECK

US ARMY CORPS OF ENGINEERS
ALASKA DISTRICT

PRIME CONTRACTOR | Recommended: | CONTRACTOR | CONTRACT NO.
RESIDENT ENGINEER | Approved: | CITY | STATE
Date:

Symb	Action	Description	Date	Appvd

U.S. ARMY ENGINEER DISTRICT
CORPS OF ENGINEERS
ANCHORAGE, ALASKA

Designed: SMH
Drawn: SMH
Reviewed: P. Lorm
Chief: — CEPOA-TS-TE-SA — Section
Submitted: D. Frenier — Branch
Date: 16 JULY 2009
Dwg Scale: AS NOTED
Plot Scale: 1:2
File: FTW336A-068-S6-02
Drawing No: F-211-13-01

INV. NO. W911KB-09-R-0007
PN 65076
FTW336A

FT. WAINWRIGHT, ALASKA
AIRCRAFT PARTS STORAGE
STRUCTURAL
DETAILS
STUD WALL DETAILS 2

Reference number:
S6.02
Sheet 68 of 118

Drawing x:\UNIFIED\EN-TE\Jobs\FTW336A\Dwgs\FTW336A-068-S6-02.dwg last saved on 6/25/2009 3:27 PM was plotted by Curfew, Donald L POA on 7/17/2009 6:42 AM

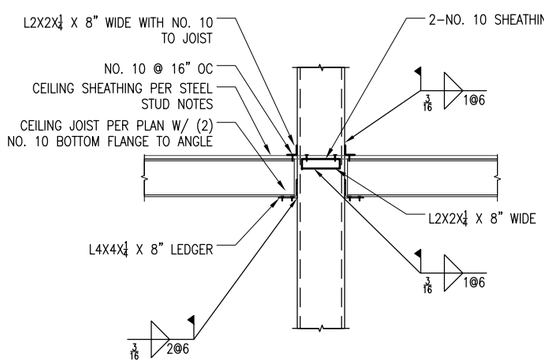

10 CEILING JOIST SUPPORT @ COL
S6.03 S1.04 SCALE: 3/4"=1'-0"

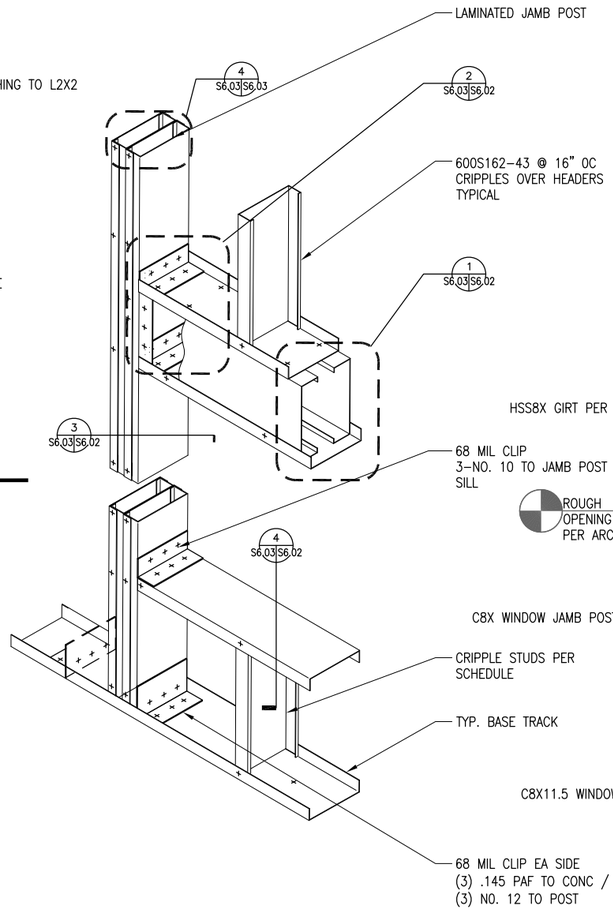

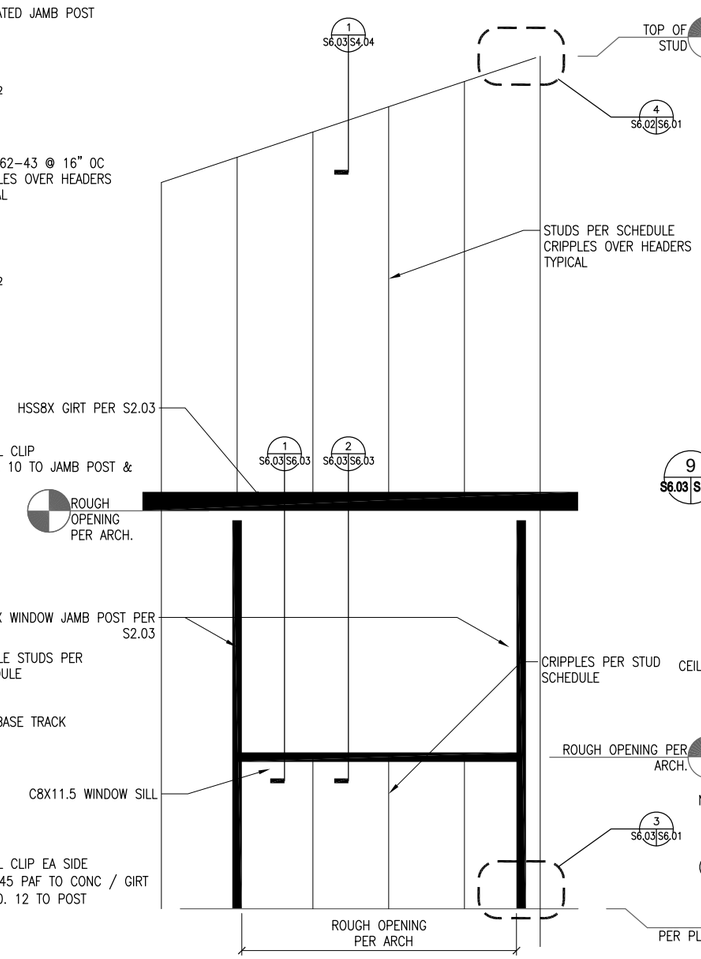

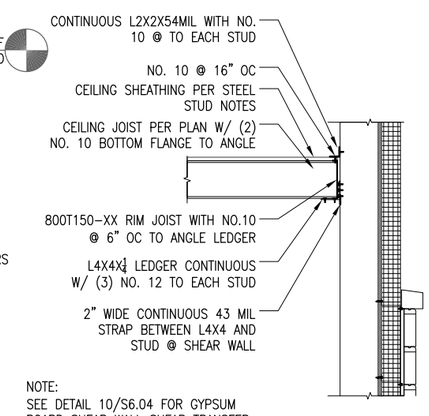

NOTE:
SEE DETAIL 10/S6.04 FOR GYPSUM BOARD SHEAR WALL SHEAR TRANSFER CONNECTIONS NOT SHOWN.

9 CEILING JOIST SUPPORTED @ EXTERIOR WALL
S6.03 S1.04 SCALE: 3/4"=1'-0"

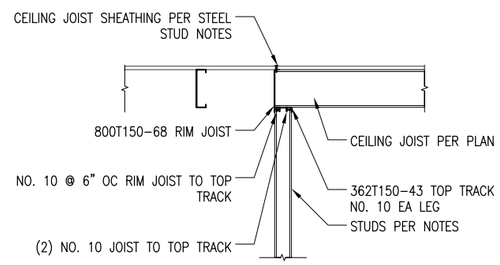

8 TYP PARTITION @ CEILING JST DIRECTION CHANGE
S1.04 S6.03 SCALE: NTS

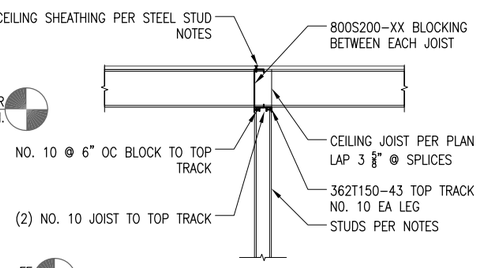

7 TYPICAL MECHANICAL LOUVER FRAMING
S6.03 S6.03 SCALE: NTS

6 GRID A & GRID I TYPICAL GLAZED WALL OPENING
S6.03 S6.03 SCALE: NTS

5 CONTINUOUS CEILING JOIST @ PARTITION
S1.04 S6.03 SCALE: 3/4" = 1'-0"

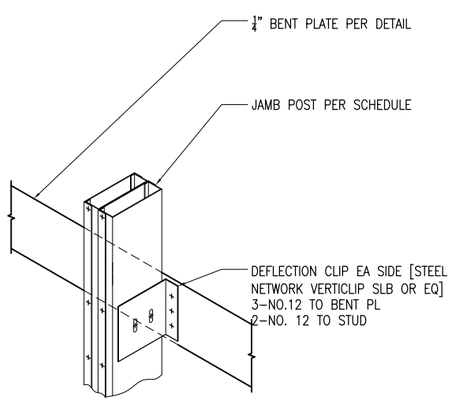

4 MECH JAMB POST TO ROOF EDGE ANGLE
S6.03 S6.03 SCALE: 1 1/2" = 1'-0"

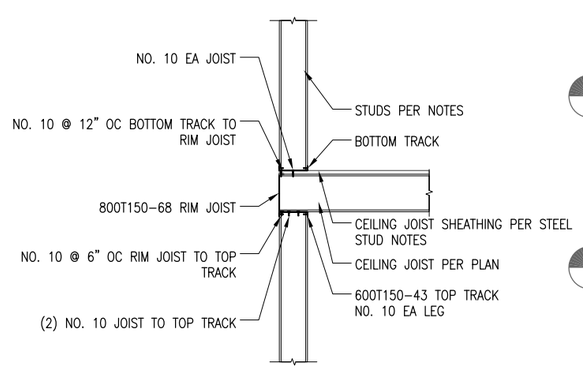

3 CEILING JOIST @ FULL HEIGHT WALL
S1.04 S6.03 SCALE: 3/4" = 1'-0"

FRAMES MAY BE PRE-FABRICATED AT CONTRACTORS OPTION.

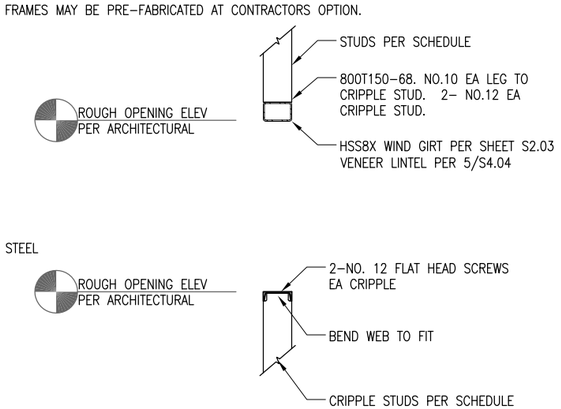

2 TYPICAL CRIPPLE STUD TO OPENING FRAME
S6.03 S6.03 S2.04 SCALE: 3/4" = 1'-0"

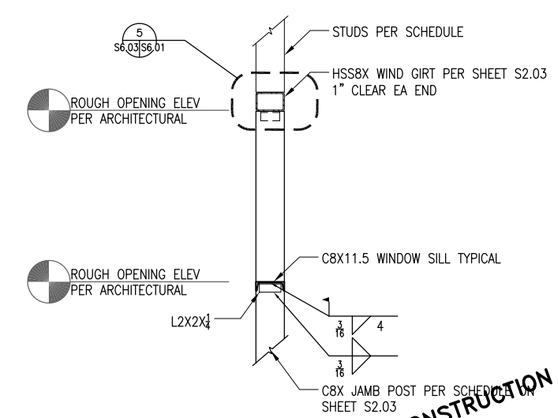

1 TYPICAL EXTERIOR JAMB FOR WIND GIRT
S6.03 S6.03 SCALE: 3/4" = 1'-0"

NOT FOR CONSTRUCTION
BACKCHECK

US ARMY CORPS OF ENGINEERS
ALASKA DISTRICT

CONTRACT NO. _____
CONTRACTOR _____
CITY _____ STATE _____
PRIME CONTRACTOR: _____
Recommended: _____
RESIDENT ENGINEER: _____
Approved: _____
Date: _____

Symb	Action	Description	Date	Appvd

U.S. ARMY ENGINEER DISTRICT
CORPS OF ENGINEERS
ANCHORAGE, ALASKA

Designed: SMH
Drawn: SMH
Reviewed: P. Lam
Chief - Gr0ds-Tr-Ft-Sa - Section
Submitted: D. Frenier
Chief - Gr0ds-Tr-Ft-Sa - Branch
Date: 16 JULY 2009
Dwg Scale: AS NOTED
Plot Scale: 1:2
File: FTW336A-069-S6-03
Drawing #: F-211-13-01

INV. NO. W911KB-09-R-0007
PN 65076
FTW336A

FT. WAINWRIGHT, ALASKA
AIRCRAFT PARTS STORAGE
STRUCTURAL
DETAILS
STUD WALL DETAILS 3

Reference number:
S6.03

Drawing x:\UNIFIED\EN-TE\Jobs\FTW336A\Dwgs\FTW336A-069-S6-03.dwg last saved on 7/1/2009 11:53 AM was plotted by Curfew, Donald L POA on 7/17/2009 6:42 AM

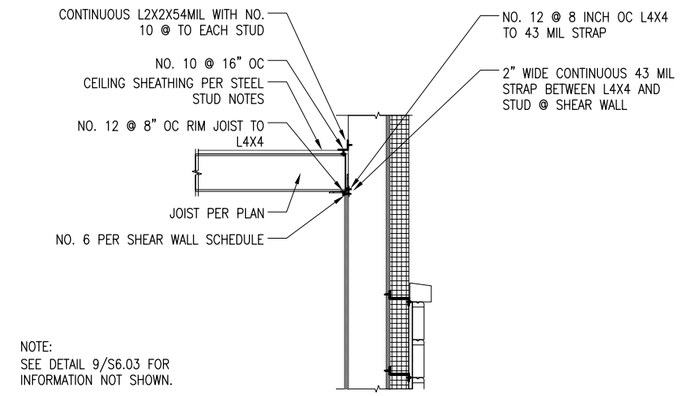

NOTE:
SEE DETAIL 9/S6.03 FOR INFORMATION NOT SHOWN.

10 S6.03 S6.04 GWB EXTERIOR SHEAR WALL SHEAR TRANSFER
SCALE: 3/4" = 1'-0"

9 S6.03 S6.04 NOT USED
SCALE: 3/4" = 1'-0"

INSTALL TRACK/STUD ADJACENT TO JAMB POST AS REQUIRED FOR FINISH ATTACHMENT (NOT SHOWN FOR CLARITY)

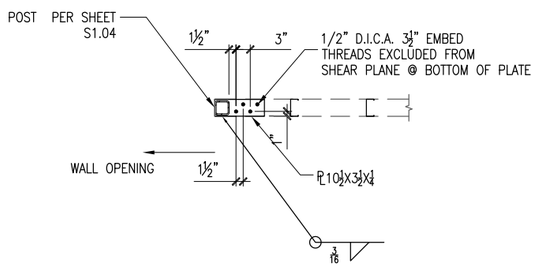

8 S1.04 S6.04 TYP PARTITION HSS3X3 POST TO SOG
SCALE: 3/4" = 1'-0"

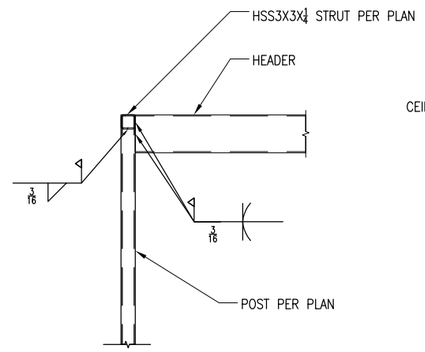

7 S1.04 S6.04 TUBE STEEL HEADER TO POST
SCALE: 3/4" = 1'-0"

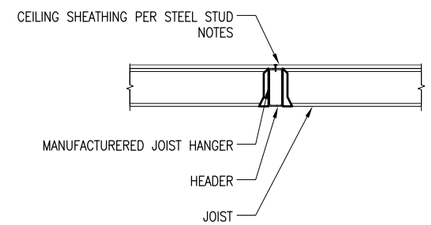

6 S1.04 S6.04 JOIST TO TUBE STEEL HEADER
SCALE: 3/4" = 1'-0"

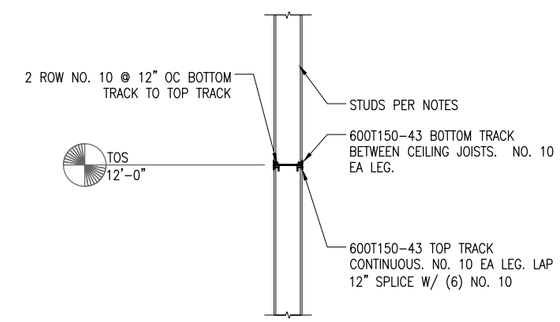

5 S1.04 S6.04 FULL HEIGHT STUDS @ CHASE
SCALE: 3/4" = 1'-0"

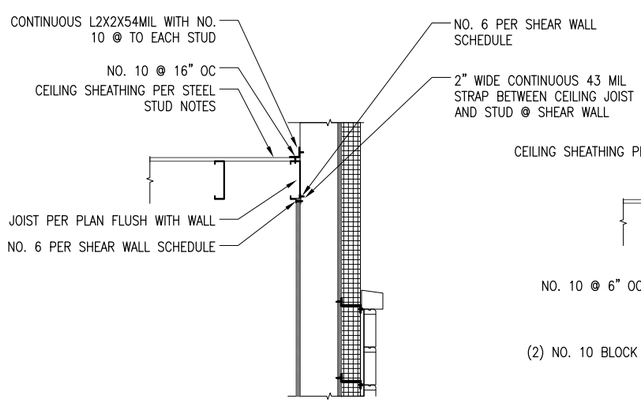

4 S1.04 S6.04 S2.04 TYP CEILING JOIST PARALLEL TO EXT. WALL
SCALE: 3/4" = 1'-0"

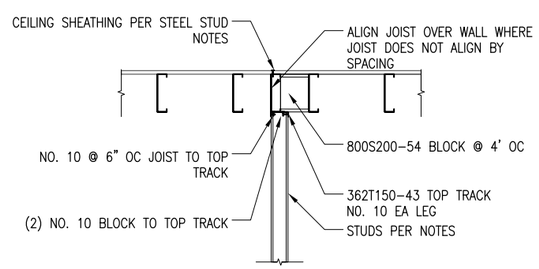

3 S1.04 S6.04 TYP. CEILING JOISTS PARALLEL TO PARTITION
SCALE: 3/4" = 1'-0"

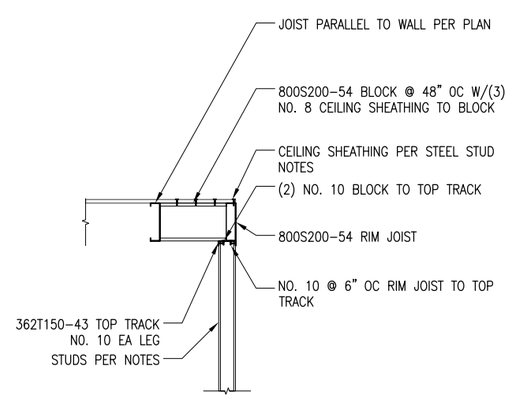

2 S1.04 S6.04 CEILING JOISTS PARALLEL TO TOP OF WALL
SCALE: 3/4" = 1'-0"

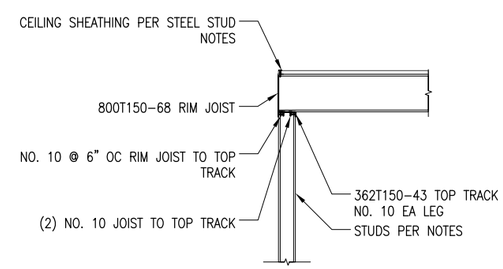

1 S1.04 S6.04 TYPICAL CEILING JOIST TO STUD WALL
SCALE: 3/4" = 1'-0"

NOT FOR CONSTRUCTION
BACKCHECK

US ARMY CORPS OF ENGINEERS
ALASKA DISTRICT

CONTRACT NO. ___
CONTRACTOR ___
CITY ___ STATE ___
PRIME CONTRACTOR ___ Recommended: ___
RESIDENT ENGINEER ___ Approved: ___ Date: ___

Sym	Action	Description	Date	Appvd

U.S. ARMY ENGINEER DISTRICT
CORPS OF ENGINEERS
ANCHORAGE, ALASKA

Designed: SMH
Drawn: SMH
Reviewed: P. Lorn
Chief — Section
Submitted: D. Frenier
Chief — Section
Date: 16 JULY 2009
Dwg Scale: AS NOTED
Plot Scale: 1:2
File: FTW336A-070-S6-04
Drawing No: F-211-13-01

PN 65076 INV. NO. W911KB-09-R-0007 FTW336A

FT. WAINWRIGHT, ALASKA
AIRCRAFT PARTS STORAGE
STRUCTURAL
DETAILS
STUD WALL DETAILS 4

Reference number:
S6.04
Sheet 70 of 118

Drawing x:\UNIFIED\EN-TE\Jobs\FTW336A\Dwgs\FTW336A-070-S6-04.dwg last saved on 7/1/2009 11:54 AM was plotted by Curfew, Donald L POA on 7/17/2009 6:42 AM

MECHANICAL LEGEND

PIPING

GS	GLYCOL SUPPLY
GR	GLYCOL RETURN
FS	FIRE SPRINKLER
	GATE VALVE (GV)
	GLOBE VALVE
	BALL VALVE (BV)
	BUTTERFLY VALVE
	STRAINER
	STRAINER W/BLOW DOWN VALVE
	CHECK VALVE (CV)
	UNION
	3-WAY MIXING/DIVERTING VALVE
	SOLENOID VALVE
	BALANCING VALVE – CIRCUIT SETTER
	PRESSURE GAUGE WITH ISOLATION VALVE
	THERMOMETER WITH ISOLATION VALVE
CD	CONDENSATE DRAIN
Ø	NOMINAL PIPE DIAMETER (INCHES)
HPS	HIGH PRESSURE STEAM
LPS	LOW PRESSURE STEAM
–	COLD WATER – POTABLE
– –	HOT WATER – POTABLE
– – –	HOT WATER RECIRCULATION – POTABLE
– – – – V – – – –	VENT – SANITARY
S	SANITARY
CR	CONDENSATE RETURN, STEAM
FCO	PLUMBING CLEANOUT
	PIPE REDUCERS
	PIPE ANCHOR

HVAC

12X12	DUCT (INCHES) (FIRST DIM. SIDE SHOWN)
	VOLUME DAMPER
	FLEXIBLE CONNECTION
	FLEXIBLE DUCT
FD	FIRE DAMPER
	ELBOW WITH TURNING VANES
SUPPLY / RETURN	CEILING DIFFUSER/GRILLE
SUPPLY / RETURN	DUCT SECTION UP
SUPPLY / RETURN	DUCT SECTION DN
EXHAUST / OA	DUCT SECTION UP
EXHAUST / OA	DUCT SECTION DN
UC/DG	DOOR UNDERCUT/ DOOR GRILLE

AIR DEVICE IDENTIFIER → XX–XX / XX ← AIR DEVICE IDENTIFIER NUMBER; AIR DEVICE FLOW RATE (CFM)

(TX) THERMOSTAT IDENTIFIER

1 OR XX/1 EQUIPMENT REFERENCE NUMBER

ELECTRICAL MOTORS FOR USE ON 208 VOLT 3-PHASE SYSTEMS SHALL HAVE A NAMEPLATE RATING OF 200 VOLTS.

ABBREVIATIONS

AFF/AFG	ABOVE FINISHED FLOOR/ ABOVE FINISHED GRADE
BTUH/MBH	BRITISH THERMAL UNITS PER HOUR/BTUH X 1000
CD	CONDENSATE DRAIN
CFM	CUBIC FEET PER MINUTE
CO	CARBON MONOXIDE
COTG	CLEANOUT TO GRADE
CR	CONDENSATE RETURN (STEAM)
DB/WB °F	DRY BULB/WET BULB (DEGREE FAHRENHEIT)
EAT/LAT °F	ENTERING/LEAVING AIR TEMPERATURE (DEGREE FAHRENHEIT)
EWT/LWT °F	ENTERING/LEAVING WATER TEMPERATURE (DEGREE FAHRENHEIT)
FCO	FLOOR CLEANOUT
FT/FT WG/FT2/FPM/LF	FEET/FT OF WATER/SQUARE FT/FT PER MINUTE/LINEAR FT
GAL/GPM/GPH	GALLONS/GALLONS PER MINUTE/GALLONS PER HOUR
GS/GR	GLYCOL SUPPLY/RETURN
HP	HORSEPOWER
IN/IN WG/IN HG	INCH/INCHES OF WATER/INCHES OF MERCURY
NTS	NOT TO SCALE
OA	OUTSIDE AIR
PG	PROPYLENE GLYCOL (50% SOLUTION)
PD	PRESSURE DROP
POC/POD	POINT OF CONNECTION/POINT OF DEMARKATION (DOYON UTILITIES)
PPH	POUNDS PER HOUR
PSIG	POUNDS PER SQUARE INCH GAUGE
TEMP/TG	TEMPERATURE/TEMPERATURE GAUGE (DUCT)
WCO	WALL CLEANOUT

EQUIPMENT DESIGNATIONS

AC	AIR CONDITIONER
AS	AIR SEPARATOR
CD	CEILING DIFFUSER
CP	CONDENSATE PUMP
EG	EXHAUST GRILLE
ER	EXHAUST REGISTER
ERV	ENERGY RECOVERY VENTILATOR
ET	EXPANSION TANK
F&T	FLOAT AND THERMOSTATIC STEAM TRAP
GS	GAS SENSOR
GMU	GLYCOL MAKEUP UNIT
HC	HEATING COIL
HE	HEAT EXCHANGER
L	LOUVER
P	PUMP
SR	SUPPLY REGISTER
T	THERMOSTAT
WH	WATER HEATER

NOT FOR CONSTRUCTION
BACKCHECK

US ARMY CORPS OF ENGINEERS
ALASKA DISTRICT

CONTRACT NO. ___
CONTRACTOR ___
CITY ___ STATE ___
PRIME CONTRACTOR Recommended: ___
RESIDENT ENGINEER Approved: ___ Date: ___

Symb	Action	Description	Date	Appvd

U.S. ARMY ENGINEER DISTRICT
CORPS OF ENGINEERS
ANCHORAGE, ALASKA

Designed: BFC
Drawn: BFC
Reviewed: C. VONGUNTEN
Chief: ___ Section
Submitted: D. FRENER
Chief: ___ Branch
Date: 16 JULY 2009
Dwg Scale: AS NOTED
Plot Scale: 1:2
File: FTW336A-071-M0-01
Drawing #: F-211-13-01
INV. NO. W911KB-09-R-0007
PN 65076
FTW336A

FT. WAINWRIGHT, ALASKA
AIRCRAFT PARTS STORAGE
MECHANICAL
GENERAL
MECHANICAL LEGEND

Reference number:
M0.01

Drawing x:\UNIFIED\EN-TE\Jobs\FTW336A\Dwgs\FTW336A-071-M0-01.dwg last saved on 7/7/2009 7:32 AM was plotted by Curfew, Donald L POA on 7/17/2009 6:42 AM

ERV SCHEDULE

TAG	#	EFFECTIVENESS %	FANS						FIXED PLATE HEAT EXCHANGER								HYDRONIC COILS												ELECTRICAL		PROTOTYPE		REMARKS
			SUPPLY			EXHAUST			OUTSIDE AIR				EXHAUST AIR				PREHEAT COIL							HEATING COIL									
			CFM-HI/LO	ESP (IN WG)	HP	CFM-HI/LO	ESP(IN WG)	HP	EAT(°F)DB	EAT(°F)WB	LAT(°F)DB	LAT(°F)WB	EAT (°F)DB	EAT(°F)WB	LAT(°F)DB	LAT(°F)WB	MBH	EAT (°F)	LAT (°F)	GPM	Δh (FT WG)	FLUID	MBH	EAT (°F)	LAT (°F)	GPM	FLUID	Δh (FT WG)	VOLTS	PHASE	MAKE	MODEL	
ERV	1	71	3420/1710	.6	3	3420/1710	0.7	3	20	12.4	49	32	68	49	39	34	277	−55	20	30.8	9	PG 50%	70	49	68	8	PG 50%	2	480	3	XETEX	IAQ−5000	TWO SPEED MOTOR − RPM HI 1750/ LO 875
ERV	2	59	545/−	.65	0.5	500/−	0.5	0.5	20	12.4	49	32	68	49	39	34	44	−55	20	5	2	PG 50%	11	49	68	2	PG 50%	1	480	3	XETEX	IAQ−750	
ERV	3	59	600/−	.3	0.5	600/−	0.4	.5	20	12.4	105	58.5	55	33	39	34	48.6	−55	20	5.4	2	PG 50%	36	20	105	4	PG 50%	1	460	3	XETEX	IAQ−750	

CONDENSATE PUMP SCHEDULE

TAG	#	GPM	HEAD	FLUID	SERVICE	TYPE	ELECTRICAL			PROTOTYPE		REMARKS
							HP	VOLTS	PHASE	MAKE	MODEL	
CP	1	9	70	WATER	CONDENSATE RETURN	DUPLEX PUMPS, FLOAT ACTIVATED	0.75	480	3	BELL AND GOSSETT	93CC DUPLEX	14 GALLON RECEIVER

STEAM WATER HEATER

TAG	#	RECOVERY (GPH)	STORAGE (GAL)	STEAM		WATER TEMP (°F)		ELECTRICAL			PROTOTYPE		REMARKS
				PSIG	PPH	IN	OUT	HP	VOLT	PHASE	MAKE	MODEL	
WH	1	330	2	15	196	40	140	1/12	120	1	AJAX BOILER	MINI−PACK SIV5DWSP	DOUBLE WALL SEMI−INSTANTANEOUS

EXPANSION TANK SCHEDULE

TAG	#	VOLUME (GAL)		SERVICE	FLUID	SYSTEM PRESSURE (PSIG)	DIMENSIONS (IN)		PROTOTYPE		REMARKS
		ACCEPTANCE	TANK				DIAMETER	HEIGHT	MAKE	MODEL	
ET	1	17	29	ERV COILS AND BASEBOARD HEATERS	PG 50%	35	16	56	B&G	D−80V	VERTICAL FLOOR MOUNTED
ET	2	9	15	RADIANT FLOOR HEATING	PG 50%	35	16	30	B&G	D−40V	VERTICAL FLOOR MOUNTED
ET	3	1	2	DOMESTIC HOT WATER	DOMESTIC WATER	30	8	13	B&G	PT−5	PIPE MOUNTED

HEAT EXCHANGER SCHEDULE

TAG	#	HEATING CAPACITY (MBH)	GLYCOL				STEAM		SURFACE AREA (SF)	FOULING FACTOR	PROTOTYPE	
			GPM	TYPE	TEMP IN (°F)	TEMP OUT (°F)	PPH	PSIG			MAKE	MODEL
HE	1	846	96	PG 50%	160	180	915	12	40.9	0.0015	BELL AND GOSSETT	SU85−2
HE	2	604	67	PG 50%	94	114	636	12	17.4	0.00158	BELL AND GOSSETT	SU64−2

CABINET UNIT HEATER SCHEDULE

TAG	#	HEATING CAPACITY (MBH)	CFM	GLYCOL					ELECTRICAL			PROTOTYPE		SERVICE
				TEMP IN (°F)	TEMP OUT (°F)	GPM	FLUID	MAX ΔP (FT WG)	HP	ϕ	VOLTS	MAKE	MODEL	
CUH	1	9000	130	180	160	1	PROPYLENE GLYCOL 50%	1.75	1/20	1	120	TRANE	FEHB02	EXIT VESTIBULE
CUH	2	9000	130	180	160	1	PROPYLENE GLYCOL 50%	1.75	1/20	1	120	TRANE	FEHB02	EXIT VESTIBULE
CUH	3	9000	130	180	160	1	PROPYLENE GLYCOL 50%	1.75	1/20	1	120	TRANE	FEHB02	EXIT VESTIBULE
CUH	4	19000	210	180	160	2.1	PROPYLENE GLYCOL 50%	6	1/10	1	120	TRANE	FEBB03	ENTRY VESTIBULE

PUMP SCHEDULE

TAG	#	GPM	HEAD	FLUID	RPM	SERVICE	ELECTRICAL			PROTOTYPE		REMARKS
							HP	VOLTS	PHASE	MAKE	MODEL	
P	1	96	62	PROPYLENE GLYCOL 50%	1750	ERV COILS, BASEBOARD, CUH 1−4, RP 1−5	5	480	3	B&G	SERIES 80 2X2X9−1/2B	
P	2	96	62	PROPYLENE GLYCOL 50%	1750	ERV COILS, BASEBOARD, CUH 1−4, RP 1−5	5	480	3	B&G	SERIES 80 2X2X9−1/2B	
P	3	67	45	PROPYLENE GLYCOL 50%	1750	RADIANT SLAB	2	480	3	B&G	SERIES 90− 2A	
P	4	67	45	PROPYLENE GLYCOL 50%	1750	RADIANT SLAB	2	480	3	B&G	SERIES 90− 2A	

LOUVER SCHEDULE

TAG	#	CFM	FREE AREA (SF)	DIMENSIONS (IN)		REMARKS	TYPE
				LENGTH	HEIGHT		
L	1	545	1.85	24	24	ERV−2 INTAKE	
L	2	600	1.85	24	24	ERV−3 INTAKE	
L	3	3420	6.33	48	36	ERV−1 INTAKE	
L	4	3420	6.33	48	36	ERV−1 EXHAUST	
L	5	600	1.85	24	24	ERV−3 EXHAUST	
L	6	500	1.85	24	24	ERV−2 EXHAUST	

AIR SEPARATOR

TAG	#	DIAMETER (IN)	GPM	SERVICE	PROTOTYPE	
					MAKE	MODEL
AS	1	14	96	ERV COILS AND BASEBOARD	BELLL AND GOSSETT	RL−3F
AS	2	14	67	RADIANT FLOOR	BELLL AND GOSSETT	RL−3F

UNIT HEATER SCHEDULE

TAG	#	HEATING (BTUH)	CFM	GLYCOL					ELECTRICAL			PROTOTYPE		SERVICE
				GPM	TEMP IN (°F)	TEMP OUT (°F)	FLUID	MAX ΔP (FTWG)	HP	PHASE	VOLTS	MAKE	MODEL	
UH	1	5000	245	1	180	160	50% PG	.8	1/46	1	120	STERLING	HS−108A	ELECTRICAL ROOM

GAS SENSOR SCHEDULE

TAG	#	GAS	PPM	VOLTS	PHASE	SIGNAL	MAKE	MODEL	REMARKS
GS	1	CARBON MONOXIDE	0−100	120	1	RS232 DIGITAL	KT SENSOR	PPM 4021H	WALL MOUNTED INFRARED SENSOR
GS	2	CARBON MONOXIDE	0−100	120	1	RS232 DIGITAL	KT SENSOR	PPM 4021H	WALL MOUNTED INFRARED SENSOR
GS	3	CARBON MONOXIDE	0−100	120	1	RS232 DIGITAL	KT SENSOR	PPM 4021H	WALL MOUNTED INFRARED SENSOR
GS	4	CARBON MONOXIDE	0−100	120	1	RS232 DIGITAL	KT SENSOR	PPM 4021H	WALL MOUNTED INFRARED SENSOR

DUCTLESS SPLIT SYSTEM AIR CONDITIONING UNIT SCHEDULE

TAG	#	CFM	CAPACITY (MBH)		REFRIGERANT	RATING TEMP (°F)				PROTOTYPE		ELECTRICAL		REMARKS
						AMBIENT		ROOM						
			TOTAL	SENSIBLE		DB	WB	DB	WB	MAKE	MODEL	VOLTS	PHASE	
AC	1	LO−MED−HI 180−260−335	9.5	7.2	R−410	95	75	80	67	MITSUBISHI	MA−A09WA/MU−A09WA	115	1	

AIR DEVICE SCHEDULE

TAG	#	SERVICE	CFM	INLET SIZE (IN)	PROTOTYPE		REMARKS
					MAKE	MODEL	
CD−	1	VENTILATION − OFFICE AREA	50	6"ø	TITUS	TDC	24"X24" MODULE, LOUVERED FACE − 2 WAY PATTERN
CD−	2	VENTILATION − OFFICE AREA	50	6"ø	TITUS	TDC	24"X24" MODULE, LOUVERED FACE − 2 WAY PATTERN
CD−	3	VENTILATION − OFFICE AREA	50	6"ø	TITUS	TDC	24"X24" MODULE, LOUVERED FACE − 2 WAY PATTERN
CD−	4	VENTILATION − OFFICE AREA	50	6"ø	TITUS	TDC	24"X24" MODULE, LOUVERED FACE − 2 WAY PATTERN
CD−	5	VENTILATION − OFFICE AREA	50	6"ø	TITUS	TDC	24"X24" MODULE, LOUVERED FACE − 2 WAY PATTERN
CD−	6	VENTILATION − OFFICE AREA	50	6"ø	TITUS	TDC	24"X24" MODULE, LOUVERED FACE − 2 WAY PATTERN
CD−	7	VENTILATION − OFFICE AREA	75	6"ø	TITUS	TDC	24"X24" MODULE, LOUVERED FACE − 3 WAY PATTERN
CD−	8	VENTILATION − OFFICE AREA	75	6"ø	TITUS	TDC	24"X24" MODULE, LOUVERED FACE − 2 WAY PATTERN
EG−	3	EXHAUST − GENERAL STORAGE	320	12x12	TITUS	50R−SS	EGG CRATE, 304 STAINLESS STEEL
EG−	4	EXHAUST − GENERAL STORAGE AREA	1070	18x12	TITUS	50R−SS	EGG CRATE, 304 STAINLESS STEEL
EG−	5	EXHAUST − GENERAL STORAGE	320	12x12	TITUS	50R−SS	EGG CRATE, 304 STAINLESS STEEL
EG−	6	EXHAUST − GENERAL STORAGE	320	12x12	TITUS	50R−SS	EGG CRATE, 304 STAINLESS STEEL
EG−	7	EXHAUST − GENERAL STORAGE AREA	1070	18x12	TITUS	50R−SS	EGG CRATE, 304 STAINLESS STEEL
EG−	8	EXHAUST − GENERAL STORAGE	320	12x12	TITUS	50R−SS	EGG CRATE, 304 STAINLESS STEEL
ER−	1	EXHAUST − SECURE STORAGE	45	8X6	TITUS	23RL	3/4" SPACING, 45° DEFLECTION
ER−	2	EXHAUST − COPY ROOM	35	8X6	TITUS	23RL−NT	24"X24" MODULE, 3/4" SPACING, 45° DEFLECTION
ER−	3	EXHAUST − COMM ROOM	35	8X6	TITUS	23RL	3/4" SPACING, 45° DEFLECTION
ER−	4	EXHAUST − JANITOR ROOM	85	8X6	TITUS	23RL−NT	24"X24" MODULE, 3/4" SPACING, 45° DEFLECTION
ER−	5	EXHAUST − CORRIDOR/BREAK ROOM	50	8X6	TITUS	23RL−NT	24"X24" MODULE, 3/4" SPACING, 45° DEFLECTION
ER−	6	EXHAUST − MALE LATRINE	50	8X6	TITUS	23RL	3/4" SPACING, 45° DEFLECTION
ER−	7	EXHAUST − MALE LATRINE	50	8X6	TITUS	23RL	3/4" SPACING, 45° DEFLECTION
ER−	8	EXHAUST − FEMALE LATRINE	50	8X6	TITUS	23RL	3/4" SPACING, 45° DEFLECTION
ER−	9	EXHAUST − FEMALE LATRINE	50	8X6	TITUS	23RL	3/4" SPACING, 45° DEFLECTION
ER−	10	EXHAUST − ELECTRICAL ROOM	50	8X6	TITUS	23RL	3/4" SPACING, 45° DEFLECTION
ER−	11	EXHAUST − FIRE PUMP ROOM	200	12X4	TITUS	50R−SS	INTEGRAL OPPOSED BLADE DAMPER
ER−	12	EXHAUST − MECHANICAL ROOM	400	12X12	TITUS	50R−SS	INTEGRAL OPPOSED BLADE DAMPER
SR−	1	VENTILATION −SECURE STORAGE	45	8X6	TITUS	272RL	WALL MOUNTED, DOUBLE DEFLECTION BLADES
SR−	2	VENTILATION − ELECTRICAL ROOM	50	8X6	TITUS	272RL	WALL MOUNTED, DOUBLE DEFLECTION BLADES
SR−	3	VENTILATION − GENERAL STORAGE AREA	570	20X10	TITUS	DL	DRUM LOUVER, STEEL
SR−	4	VENTILATION − GENERAL STORAGE AREA	570	20X10	TITUS	DL	DRUM LOUVER, STEEL
SR−	5	VENTILATION − GENERAL STORAGE AREA	570	20X10	TITUS	DL	DRUM LOUVER, STEEL
SR−	6	VENTILATION − GENERAL STORAGE AREA	570	20X10	TITUS	DL	DRUM LOUVER, STEEL
SR−	7	VENTILATION − GENERAL STORAGE AREA	570	20X10	TITUS	DL	DRUM LOUVER, STEEL
SR−	8	VENTILATION − GENERAL STORAGE AREA	570	20X10	TITUS	DL	DRUM LOUVER, STEEL
SR−	9	HEATING AND VENTILATION − MECHANICAL ROOM	400	12X12	TITUS	272RL	3/4" SPACING, 0° DEFLECTION
SR−	10	HEATING AND VENTILATION − FIRE PUMP ROOM	200	12X12	TITUS	272RL	3/4" SPACING, 0° DEFLECTION

BASEBOARD HEATER SCHEDULE

TAG	#	ROOM	BTUH/LF	LENGTH (FT)	PROTOTYPE		REMARKS
					MAKE	MODEL	
BB	1	STOCK CONTROL OFFICE	1534	5	SLANT FIN	JA−21	2−TIER
BB	2	STOCK CONTROL OFFICE	1534	5	SLANT FIN	JA−21	2−TIER
BB	3	LOBBY	1534	4	SLANT FIN	JA−21	2−TIER
BB	4	LOBBY	1534	8	SLANT FIN	JA−21	2−TIER
BB	5	CHIEFS OFFICE	1000	8	SLANT FIN	JA−14	
BB	6	DEPUTYS OFFICE	1000	7	SLANT FIN	JA−14	
BB	7	RECEIVING OFFICE	1000	3	SLANT FIN	JA−14	
BB	8	RECEIVING OFFICE	1000	4	SLANT FIN	JA−14	
BB	9	SECURED STOCK OFFICE	1000	7	SLANT FIN	JA−14	
BB	10	STORAGE	1000	3	SLANT FIN	JA−14	
BB	11	STORAGE	1000	4	SLANT FIN	JA−14	
BB	12	SHIPPING TURN−IN OFFICE	1534	6	SLANT FIN	JA−21	2−TIER

NOTE: ALL MOTORS 1 HP AND GREATER ARE TO BE PREMIUM EFFICIENCY.

RADIANT PANEL SCHEDULE

TAG	#	GLYCOL						DIMENSIONS (FT)		PROTOTYPE		REMARKS
		BTUH/LF	GPM	FLUID	EWT (°F)	LWT (°F)	PD (FT WG)	LENGTH	WIDTH	MAKE	MODEL	
RP	1	1772	4.7	50% PG	180	160	2.1	8	5	RUNTAL	RC−21	CONSISTS OF 3 RC−21 PANELS, 8' LONG, PIPED IN SERIES
RP	2	1772	4.7	50% PG	180	160	2.1	8	5	RUNTAL	RC−21	CONSISTS OF 3 RC−21 PANELS, 8' LONG, PIPED IN SERIES
RP	3	1772	4.7	50% PG	180	160	2.1	8	5	RUNTAL	RC−21	CONSISTS OF 3 RC−21 PANELS, 8' LONG, PIPED IN SERIES
RP	4	1772	4.7	50% PG	180	160	2.1	8	5	RUNTAL	RC−21	CONSISTS OF 3 RC−21 PANELS, 8' LONG, PIPED IN SERIES
RP	5	1772	4.7	50% PG	180	160	2.1	8	5	RUNTAL	RC−21	CONSISTS OF 3 RC−21 PANELS, 8' LONG, PIPED IN SERIES

GLYCOL MAKEUP UNIT

TAG	#	DIMENSIONS			ELECTRICAL			PROTOTYPE		REMARKS
		VOLUME (GAL)	DIAMETER (IN)	HEIGHT (IN)	HP	VOLTS	PHASE	MAKE	MODEL	
GMU	1	55	31	58	1/2	115	1	BELL & GOSSETT	GMU−30	
GMU	2	55	31	58	1/2	115	1	BELL & GOSSETT	GMU−30	

NOT FOR CONSTRUCTION

BACKCHECK

US ARMY CORPS OF ENGINEERS
ALASKA DISTRICT

CONTRACT NO. ___
CONTRACTOR ___
CITY ___ STATE ___
PRIME CONTRACTOR ___ Recommended: ___
RESIDENT ENGINEER ___ Approved: ___ Date: ___

Symb	Action	Description	Date	Appvd

U.S. ARMY ENGINEER DISTRICT
CORPS OF ENGINEERS
ANCHORAGE, ALASKA

Designed: BFC
Drawn: BFC
Reviewed: C. VONGUNTEN
Chief: ___ CADD-Chk-Tr-Cal ___ Section
Submitted: D. FRENER
Chief: ___ CADD-Chk-Tr-Cal ___ Branch
Date: 16 JULY 2009
Dwg Scale: AS NOTED
Plot Scale: 1:2
File: FTW336A-072-MO-02
Drawing No: F-211-13-01

INV. NO. W911KB-09-R-0007
PN 65076
FTW336A

FT. WAINWRIGHT, ALASKA
AIRCRAFT PARTS STORAGE
MECHANICAL
GENERAL
MECHANICAL EQUIPMENT SCHEDULE

Reference number:
M0.02
Sheet 72 of 118

Drawing x:\UNIFIED\EN-TE\Jobs\FTW336A\Dwgs\FTW336A-072-MO-02.dwg last saved on 7/6/2009 10:08 AM was plotted by Curfew, Donald L POA on 7/17/2009 6:43 AM

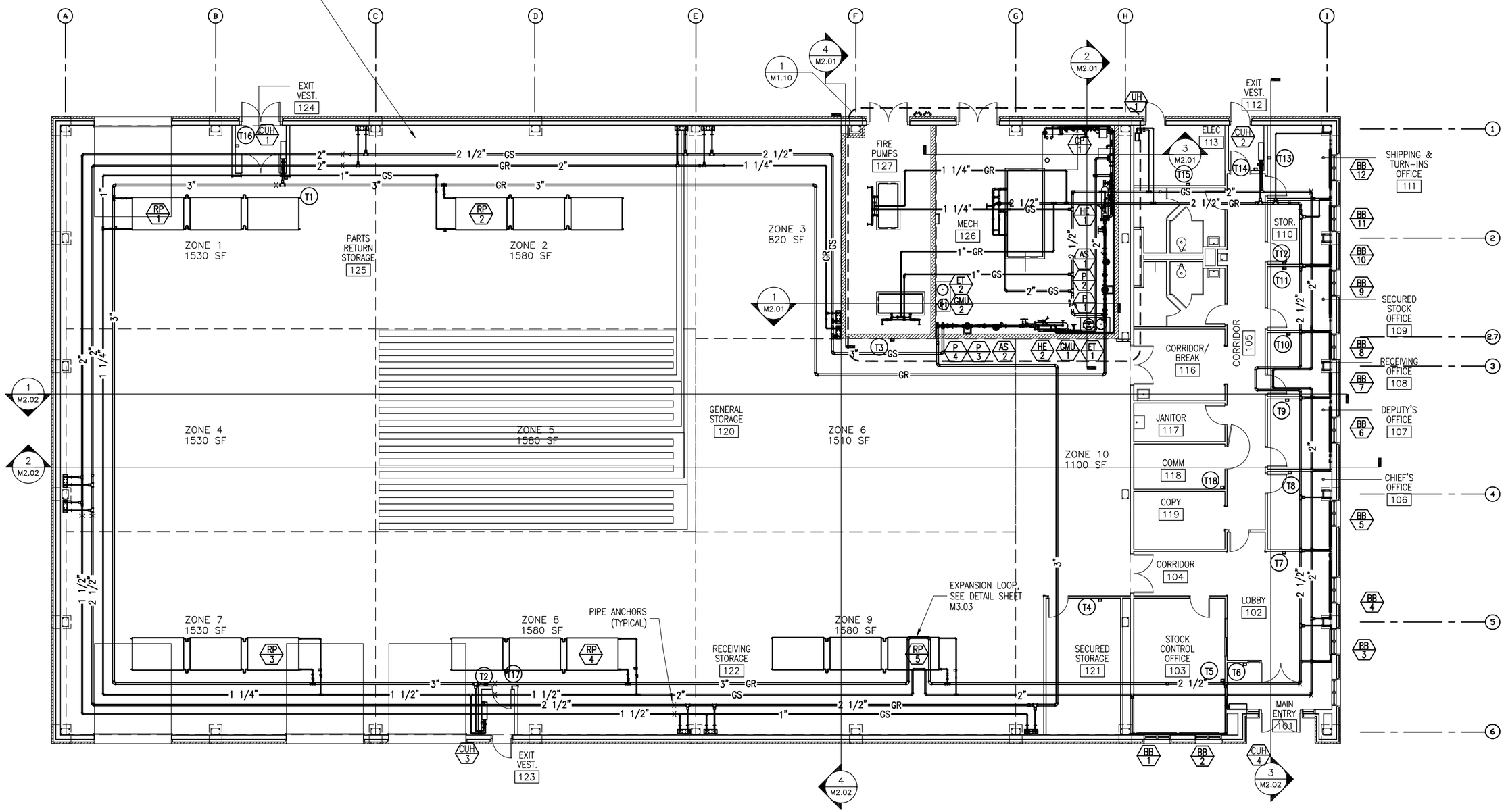

MECHANICAL HEATING PLAN

1/8"=1'-0"

NOTE 1: SEE SHEET M4.03 FOR THERMOSTAT SCHEDULE

NOTE 2: SEE SHEET M3.01 FOR RADIANT FLOOR ZONE DATA

NOT FOR CONSTRUCTION

BACKCHECK

US ARMY CORPS OF ENGINEERS
ALASKA DISTRICT

CONTRACT NO.
CONTRACTOR
CITY
STATE
PRIME CONTRACTOR
Recommended:
RESIDENT ENGINEER
Approved:
Date:

Sym	Action	Description	Date	Appvd

U.S. ARMY ENGINEER DISTRICT
CORPS OF ENGINEERS
ANCHORAGE, ALASKA

Designed: BFC
Drawn: BFC
Reviewed: C. VONGUNTEN
Chief: — Section
Submitted: D. FRENER
Chief: — Branch
Date: 16 JULY 2009
Dwg Scale: AS NOTED
Plot Scale: 1:2
File: FTW336A-073-M1-01
Drawing #: F-211-13-01

INV. NO. W911KB-09-R-0007
PN 65076
FTW336A

FT. WAINWRIGHT, ALASKA
AIRCRAFT PARTS STORAGE
MECHANICAL
PLANS
MECHANICAL HEATING PLAN

Reference number:
M1.01

Drawing x:\UNIFIED\EN-TE\Jobs\FTW336A\Dwgs\FTW336A-073-M1-01.dwg last saved on 7/15/2009 10:01 AM was plotted by Curfew, Donald L POA on 7/17/2009 6:44 AM

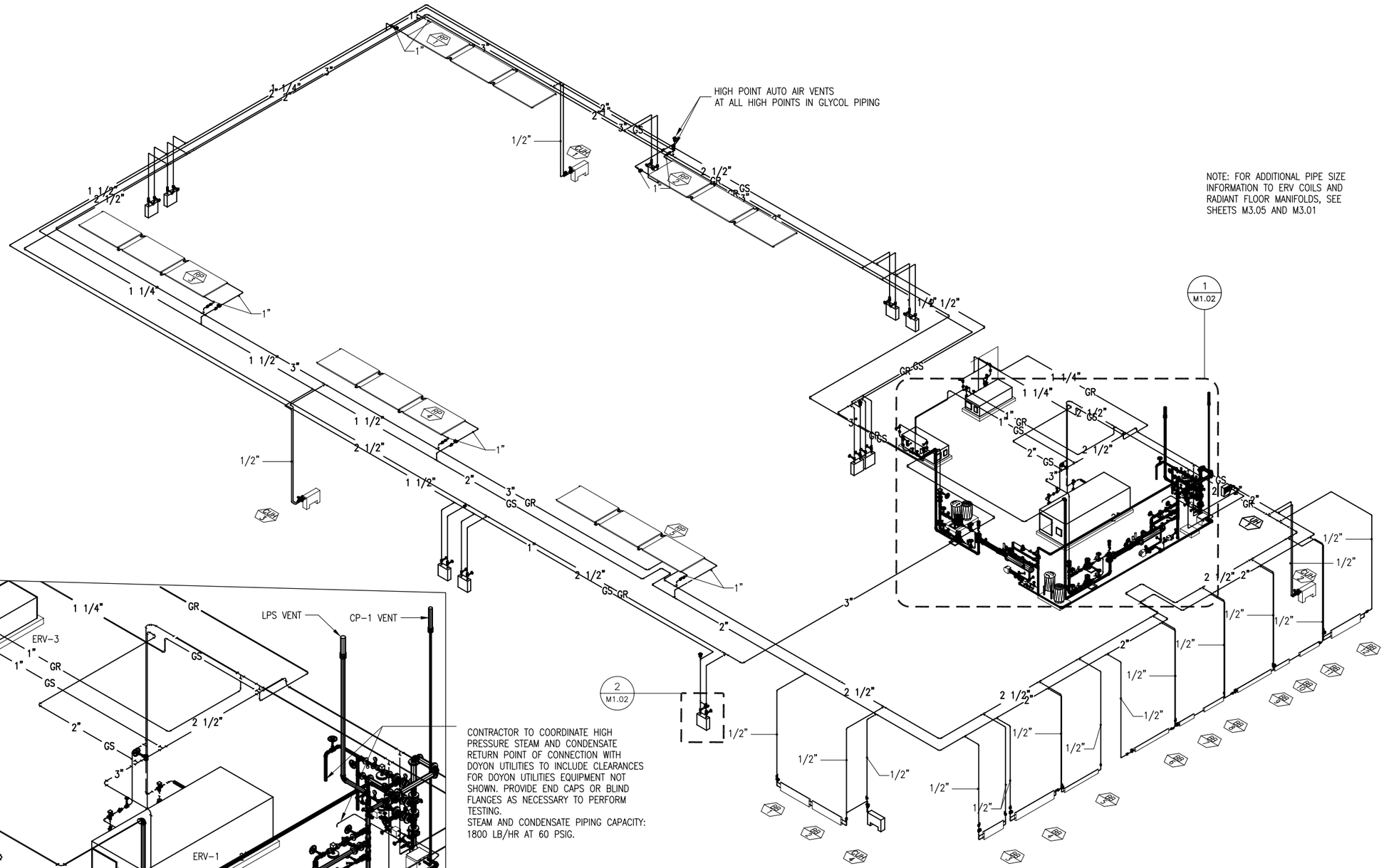

MECHANICAL HEATING PIPING ISOMETRIC
NTS

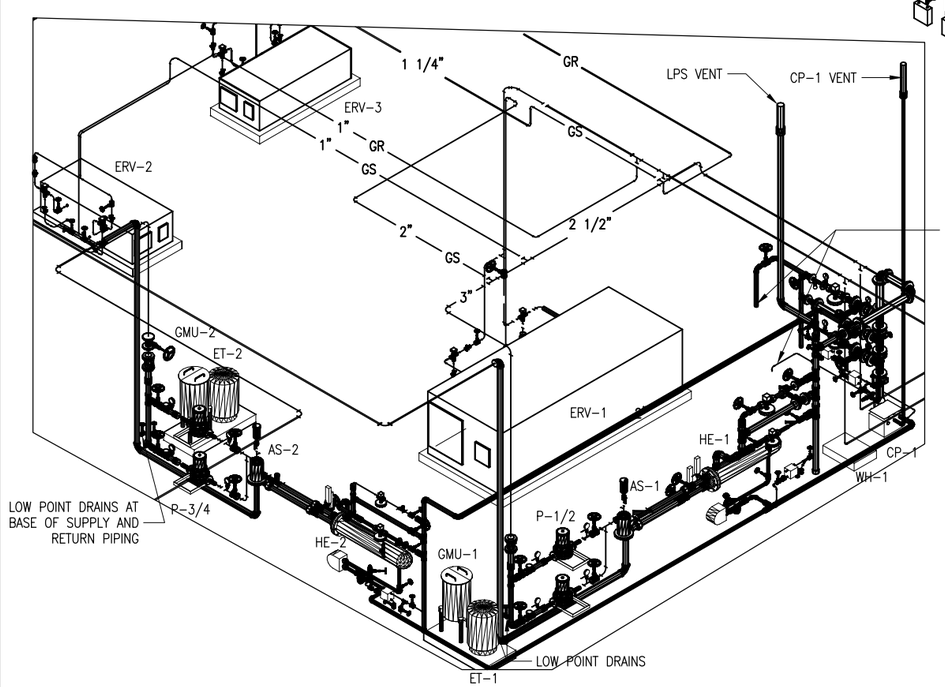

1 M1.02 ENLARGED PIPING ISOMETRIC AT MECHANICAL ROOM
NTS

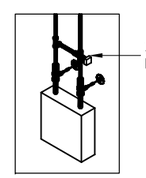

2 M2.02 DETAIL AT ZONE 10 MANIFOLD
NTS

NOT FOR CONSTRUCTION
BACKCHECK

US ARMY CORPS OF ENGINEERS
ALASKA DISTRICT

CONTRACT NO. _____
CONTRACTOR _____
CITY _____ STATE _____
PRIME CONTRACTOR _____
Recommended: _____
RESIDENT ENGINEER _____
Approved: _____
Date: _____

Sym	Action	Description	Date	Appvd

U.S. ARMY ENGINEER DISTRICT
CORPS OF ENGINEERS
ANCHORAGE, ALASKA

Designed: BFC
Drawn: BFC
Reviewed: C. VONGUNTEN
Chief: — CEPOA-EN-TE-NE Section
Submitted: D. FRENER
Chief: CEPOA-EN-TE-NE Section
Date: 16 JULY 2009
Dwg Scale: AS NOTED
Plot Scale: 1:2
File: FTW336A-074-M1-02
Drawing #: F-211-13-01

INV. NO. W911KB-09-R-0007
PN 65076 FTW336A

FT. WAINWRIGHT, ALASKA
AIRCRAFT PARTS STORAGE
MECHANICAL
PLANS
MECHANICAL PIPING ISOMETRIC

Reference number:
M1.02

Drawing x:\UNIFIED\EN-TE\Jobs\FTW336A\Dwgs\FTW336A-074-M1-02.dwg last saved on 7/15/2009 10:03 AM was plotted by Curfew, Donald L POA on 7/17/2009 6:45 AM

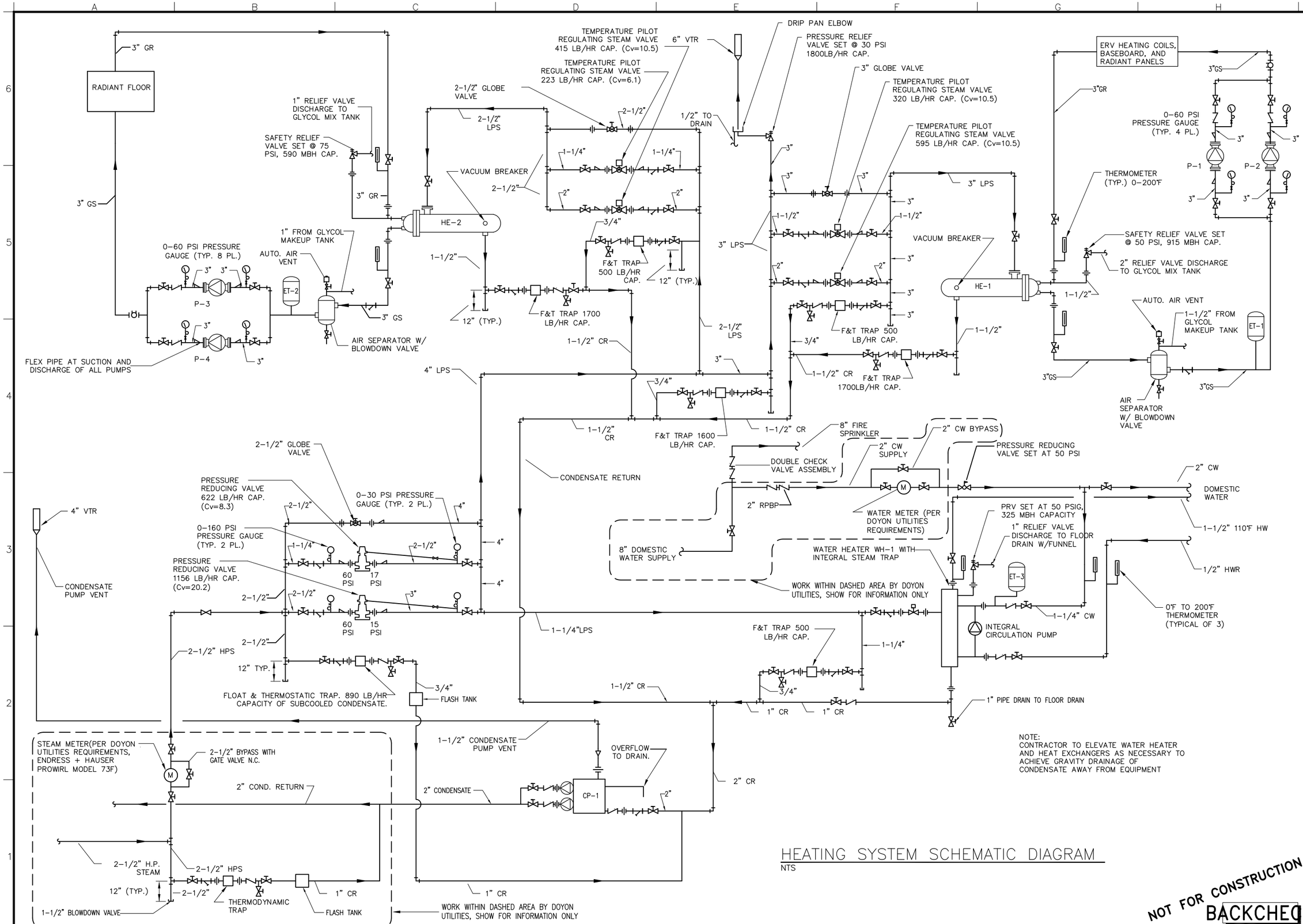

HEATING SYSTEM SCHEMATIC DIAGRAM

NTS

NOT FOR CONSTRUCTION

BACKCHECK

US ARMY CORPS OF ENGINEERS
ALASKA DISTRICT

CONTRACT NO.
CONTRACTOR
CITY
STATE
PRIME CONTRACTOR
RESIDENT ENGINEER
Recommended:
Approved:
Date:

Grid	Action	Description	Date	Appvd

U.S. ARMY ENGINEER DISTRICT
CORPS OF ENGINEERS
ANCHORAGE, ALASKA

Designed: BFC
Drawn: BFC
Reviewed: C. VONGUNTEN
Chief — CEPOA-DN-TE-MF — Section
Submitted: D. FRENER
Chief — CEPOA-DN-TE — Branch
Date: 16 JULY 2009
Dwg Scale: AS NOTED
Plot Scale: 1:2
File: FTW336A_075_M1-03
Drawing: N/A F-211-13-01

PN 65076
INV. NO. W911KB-09-R-0007
FTW336A

FT. WAINWRIGHT, ALASKA
AIRCRAFT PARTS STORAGE
MECHANICAL
PLANS
HEATING PLANT DIAGRAM

Reference number:
M1.03

Drawing x:\UNIFIED\EN-TE\Jobs\FTW336A\Dwgs\FTW336A-075-M1-03.dwg last saved on 7/6/2009 1:26 PM was plotted by Curfew, Donald L POA on 7/17/2009 6:45 AM

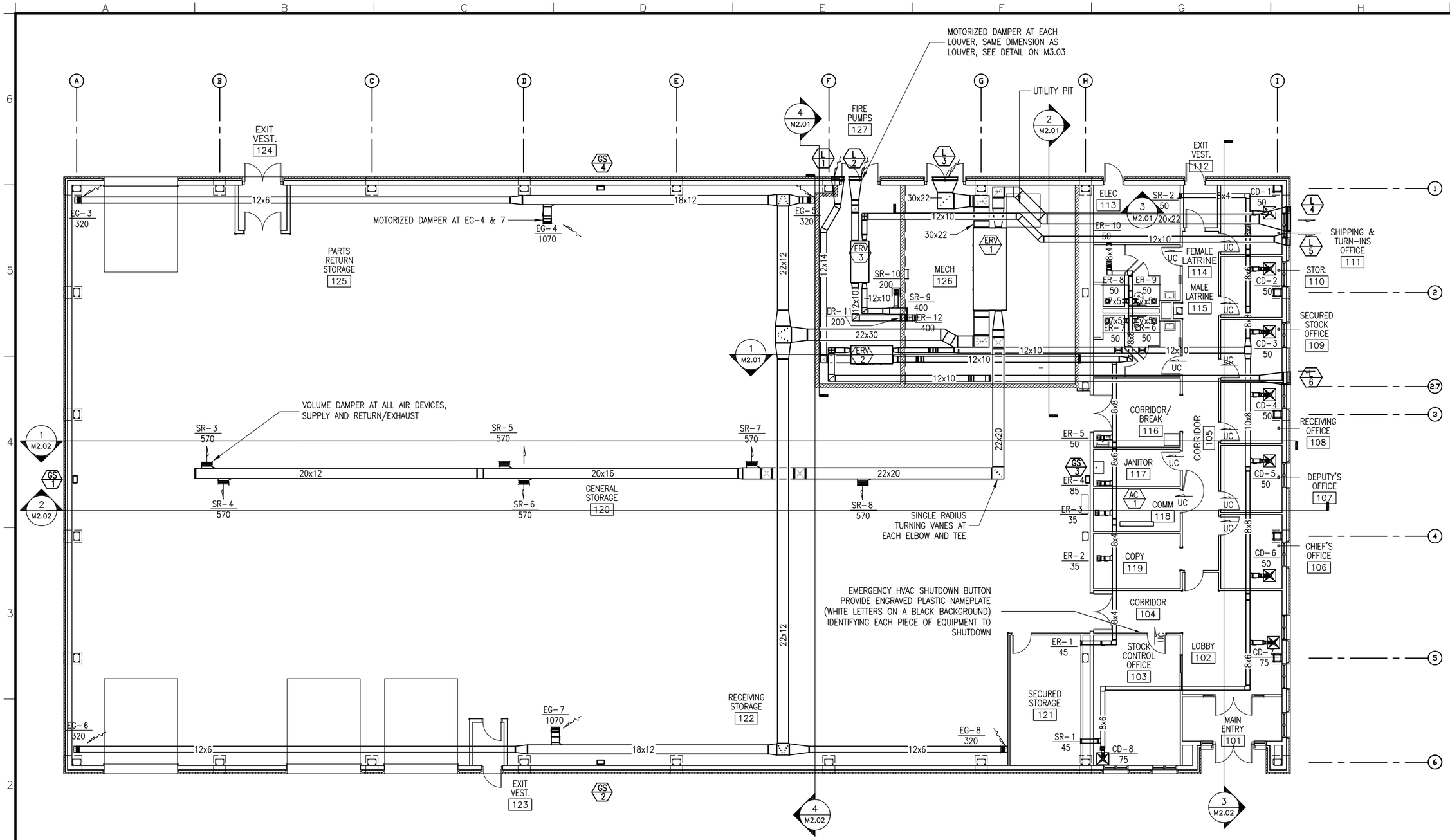

MECHANICAL VENTILATION PLAN

1/8"=1'-0"

NOTES:

1. SEE SHEET A3.01 AND A3.02 FOR LOUVER HEIGHTS
2. INSULATE ALL DUCTWORK FROM THE POINT WHERE IT ENTERS THE BUILDING FROM THE OUTSIDE OR CONNECTS TO A LOUVER TO 6' ALONG IT'S LENGTH.
3. LOCATE ERV'S TO ALLOW MANUFACTURERS RECOMMENDED ACCESS REQUIREMENTS AND COIL PULL SPACE.
4. AT THE DISCHARGE OF EACH ERV FAN, PROVIDE A MINIMUM LENGTH OF STRAIGHT DUCT EQUAL TO 3X THE EQUIVALENT DUCT DIAMETER.
5. PROVIDE FLEXIBLE DUCT CONNECTIONS TO ERV'S

NOT FOR CONSTRUCTION

BACKCHECK

US ARMY CORPS OF ENGINEERS
ALASKA DISTRICT

CONTRACT NO.
CONTRACTOR
CITY STATE
PRIME CONTRACTOR Recommended:
RESIDENT ENGINEER Approved:
Date:

Symb. Action Description Date Appvd

U.S. ARMY ENGINEER DISTRICT
CORPS OF ENGINEERS
ANCHORAGE, ALASKA

Designed: BFC
Drawn: BFC
Reviewed: C. VONGUNTEN
Chief — CEPOA-EN-TE-MF Section
Submitted: D. FRENER
Chief — CEPOA-EN-TE Branch
Date: 16 JULY 2009
Dwg. Scale: AS NOTED
Plot Scale: 1:2
File: FTW336A-076-M1-04
Drawing #: F-211-13-01

INV. NO. W911KB-09-R-0007
PN 65076 FTW336A

FT. WAINWRIGHT, ALASKA
AIRCRAFT PARTS STORAGE
MECHANICAL
PLANS
MECHANICAL VENTILATION PLAN

Reference number:
M1.04

Drawing x:\UNIFIED\EN-TE\Jobs\FTW336A\Dwgs\FTW336A-076-M1-04.dwg last saved on 7/15/2009 10:04 AM was plotted by Curfew, Donald L POA on 7/17/2009 6:46 AM

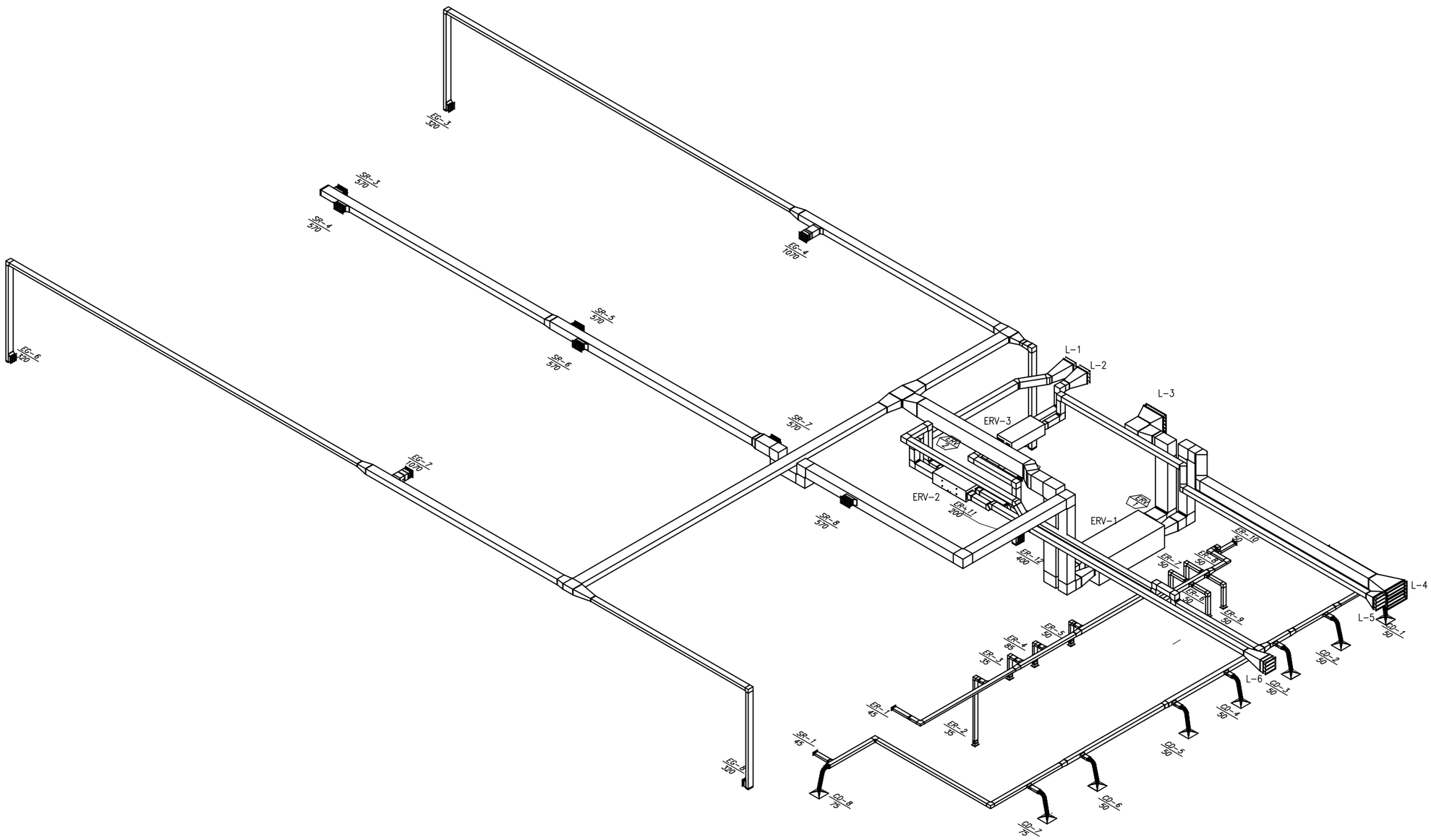

VENTILATION DUCTWORK ISOMETRIC DIAGRAM

NTS

NOTE: SEE VENTILATION FLOOR PLAN FOR DUCT DIMENSIONS

NOT FOR CONSTRUCTION

BACKCHECK

US ARMY CORPS OF ENGINEERS
ALASKA DISTRICT

CONTRACT NO. ____
CONTRACTOR ____
CITY ____ STATE ____
Recommended: ____ PRIME CONTRACTOR
Approved: ____ RESIDENT ENGINEER
Date: ____

Symb	Action	Description	Date	Appvd

U.S. ARMY ENGINEER DISTRICT
CORPS OF ENGINEERS
ANCHORAGE, ALASKA

Designed: BFC
Drawn: BFC
Reviewed: C. VONGUNTEN
Chief ___ CEPOA-EC-TE-NE Section
Submitted: D. FRENER
Chief ___ CEPOA-EC-TE-NE Branch
Date: 16 JULY 2009
Dwg Scale: AS NOTED
Plot Scale: 1:2
File: FTW336A-077-M1-05
Drawing #: F-211-13-01

INV. NO. W911KB-09-R-0007
PN 65076
FTW336A

FT. WAINWRIGHT, ALASKA
AIRCRAFT PARTS STORAGE
MECHANICAL
PLANS
VENTILATION DUCTWORK ISOMETRIC

Reference number:
M1.05

Drawing x:\UNIFIED\EN-TE\Jobs\FTW336A\Dwgs\FTW336A-077-M1-05.dwg last saved on 7/15/2009 10:05 AM was plotted by Curfew, Donald L POA on 7/17/2009 6:46 AM

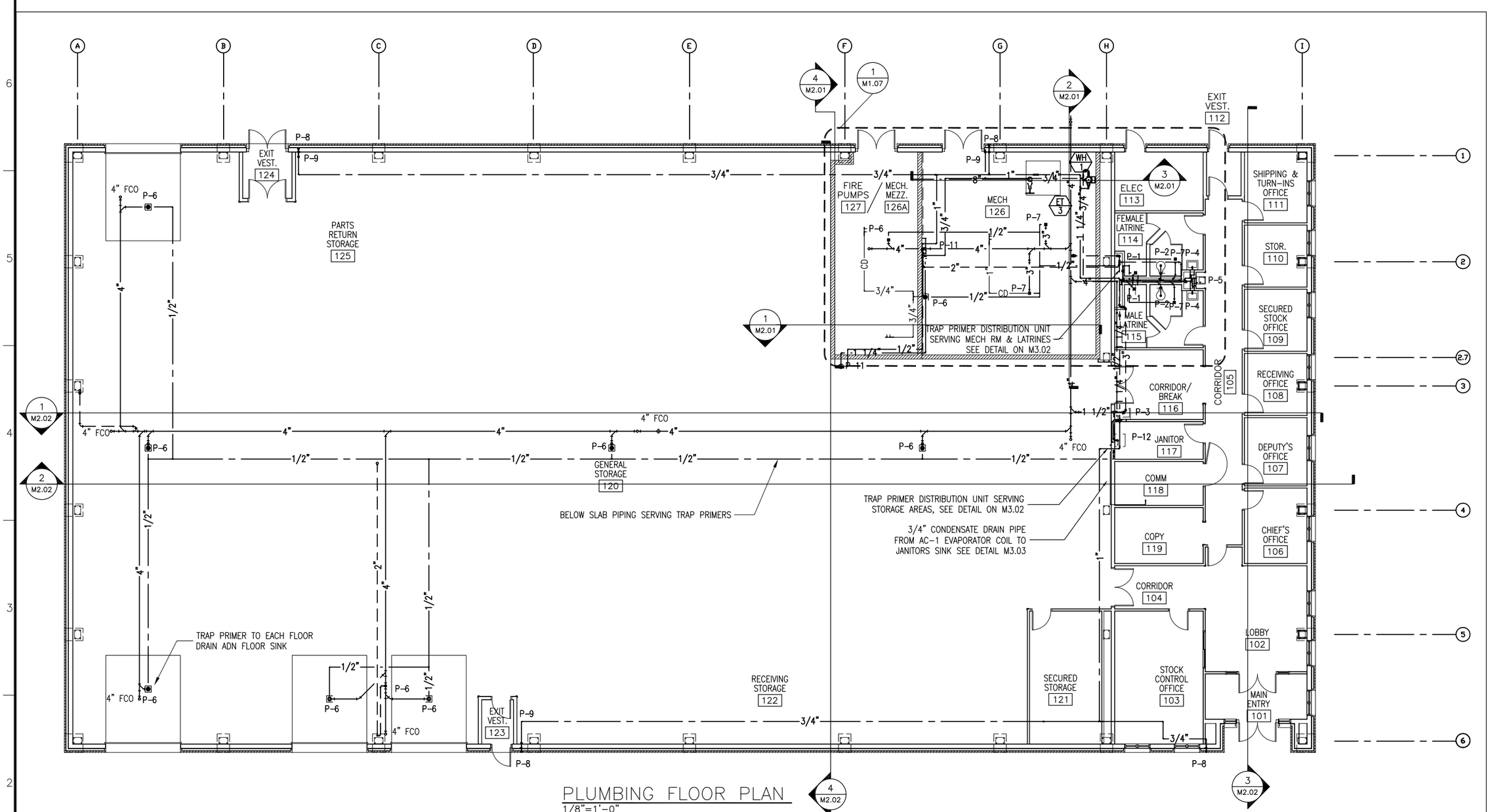

PLUMBING FLOOR PLAN

1/8"=1'-0"

0 4' 8' 16'

1/8" = 1'-0"

PLUMBING FIXTURE SCHEDULE

TAG	#	TYPE	CONNECTION SIZE (INCHES)		
			CW	HW	SAN
P-	1	SHOWER; 2.5 GPM FLOW RESTRICTOR	1/2	1/2	2
P-	2	WATER CLOSET - HANDICAPPED - FLUSH VALVE - FLOOR MOUNT, 1.28 GPM PER FLUSH	1	-	3
P-	3	KITCHEN SINK - STAINLESS STEEL SINGLE BOWL - SINGLE LEVER FAUCETT HANDLE, 1.5 GPM AERATOR	1/2	1/2	2
P-	4	LAVATORY, HANDICAPPED, WRIST BLADE FAUCET CONTROLS, 1.5 GPM AERATOR	1/2	1/2	1-1/2
P-	5	WATER COOLER, 120V/1PH POWER, WHEELCHAIR ACCESSIBLE	1/2	-	1-1/2
P-	6	FLOOR SINK- HEAVY DUTY TRAFFIC 12" SQ TOP, 8" DEEP, SEDIMENT BUCKET , TRAP PRIMER CONNECTION	1/2	-	4
P-	7	FLOOR DRAIN - 5" ROUND GRATE, TRAP PRIMER CONNECTION	1/2	-	2
P-	8	HOSE BIBB - FREEZE PROOF	1/2	-	-
P-	9	HOSE BIBB - HOT AND COLD WATER	1/2	1/2	-
P-	10	HOSE BIBB - INTERIOR	1/2	-	-
P-	11	EMERGENCY EYEWASH, FLOOR MOUNTED	1/2	-	1-1/2
P-	12	SERVICE SINK, PORCELAIN , 6" VACUUM BREAKER SPOUT AND PAIL HOOK	1/2	1/2	2

NOT FOR CONSTRUCTION

BACKCHECK

US ARMY CORPS OF ENGINEERS
ALASKA DISTRICT

CONTRACT NO.
CONTRACTOR
CITY
STATE
PRIME CONTRACTOR
Recommended:
Approved:
RESIDENT ENGINEER
Date:

Grid	Action	Description	Date	Appvd

U.S. ARMY ENGINEER DISTRICT
CORPS OF ENGINEERS
ANCHORAGE, ALASKA

Designed: BFC
Drawn: BFC
Reviewed: C. VONGUNTEN
Chief — Section
Submitted: D. FRENER
Chief — Branch
Date: 16 JULY 2009
Dwg Scale: AS NOTED
Plot Scale: 1:2
File: FTW336A-078-M1-06
Drawing #: F-211-13-01

INV. NO. W911KB-09-R-0007
PN 65076
FTW336A

FT. WAINWRIGHT, ALASKA
AIRCRAFT PARTS STORAGE
MECHANICAL
PLANS
PLUMBING PLAN

Reference number:
M1.06

Drawing x:\UNIFIED\EN-TE\Jobs\FTW336A\Dwgs\FTW336A-078-M1-06.dwg last saved on 7/15/2009 11:33 AM was plotted by Curfew, Donald L POA on 7/17/2009 6:47 AM

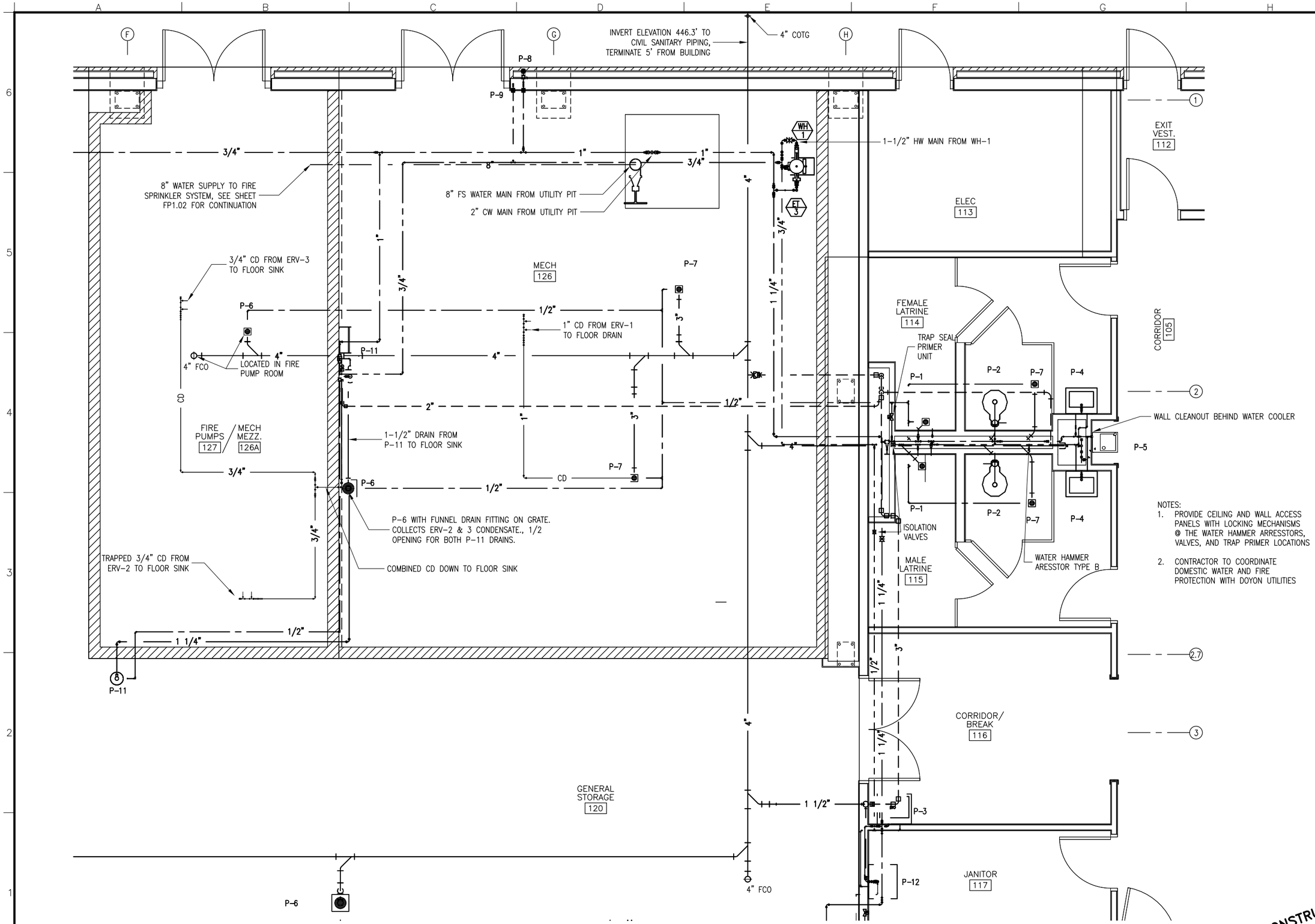

NOTES:
1. PROVIDE CEILING AND WALL ACCESS PANELS WITH LOCKING MECHANISMS @ THE WATER HAMMER ARRESSTORS, VALVES, AND TRAP PRIMER LOCATIONS
2. CONTRACTOR TO COORDINATE DOMESTIC WATER AND FIRE PROTECTION WITH DOYON UTILITIES

PLUMBING ENLARGED FLOOR PLAN
3/8"=1'-0"

NOT FOR CONSTRUCTION
BACKCHECK

US ARMY CORPS OF ENGINEERS
ALASKA DISTRICT

CONTRACT NO. ___
CONTRACTOR ___
CITY ___ STATE ___
PRIME CONTRACTOR ___ Recommended: ___
RESIDENT ENGINEER ___ Approved: ___ Date: ___

Sym	Action	Description	Date	Appvd

U.S. ARMY ENGINEER DISTRICT
CORPS OF ENGINEERS
ANCHORAGE, ALASKA

Designed: BFC
Drawn: BFC
Reviewed: C. VONGUNTEN
Chief: G2/G4-Chief-TE-MF
Submitted: D. FRENER
Chief: G2/G4-Chief-TE-MF
Date: 16 JULY 2009
Dwg Scale: AS NOTED
Plot Scale: 1:2
Plot: FTW336A-079-M1-07
Drawing #: F-2-211-13-01

INV. NO. W911KB-09-R-0007
PN 65076
FTW336A

FT. WAINWRIGHT, ALASKA
AIRCRAFT PARTS STORAGE
MECHANICAL
PLANS
PLUMBING ENLARGED FLOOR PLAN

Reference number:
M1.07

Drawing x:\UNIFIED\EN-TE\Jobs\FTW336A\Dwgs\FTW336A-079-M1-07.dwg last saved on 7/9/2009 10:04 AM was plotted by Curfew, Donald L POA on 7/17/2009 6:47 AM

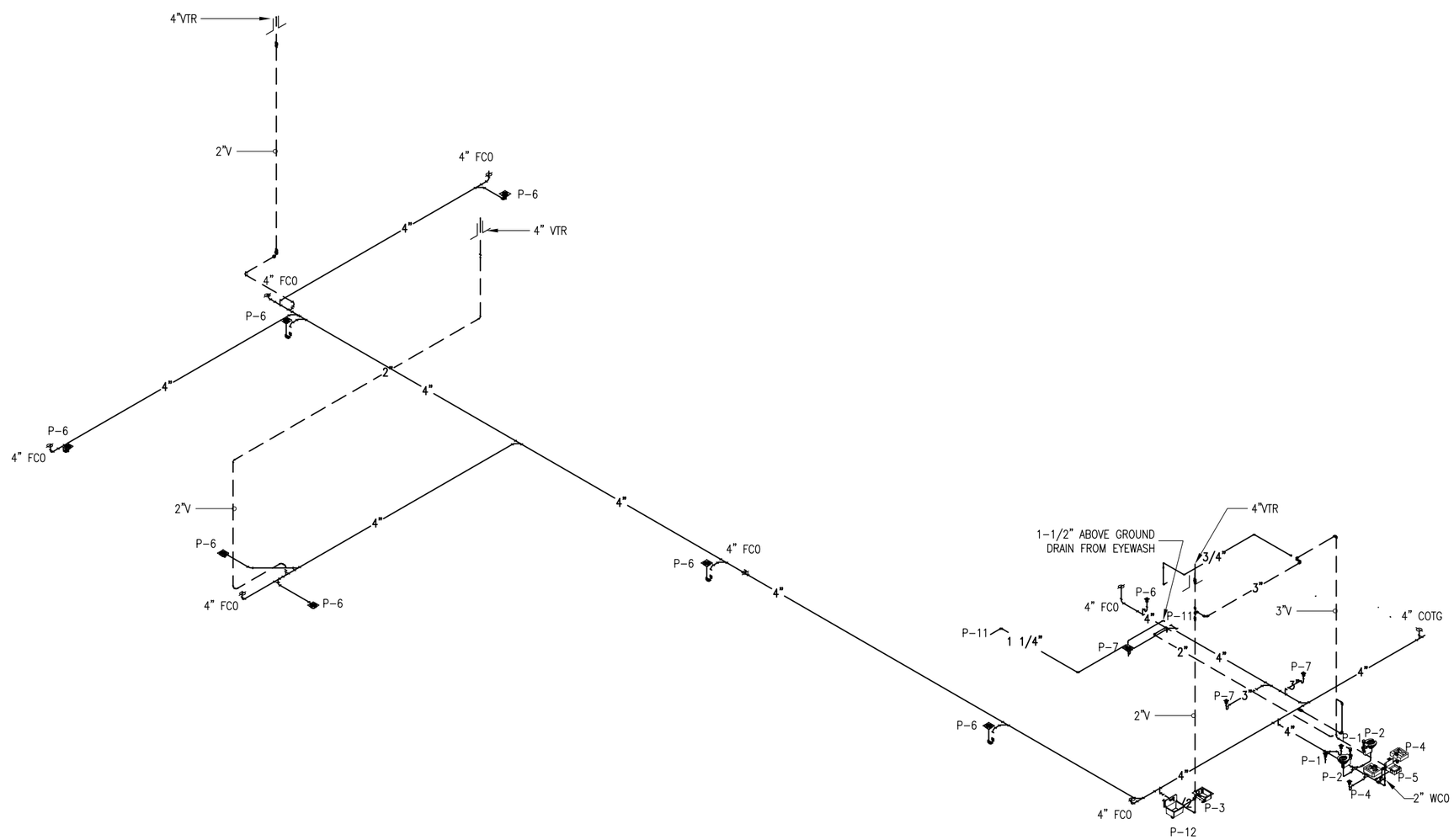

PLUMBING SANITARY ISOMETRIC DIAGRAM

NTS

NOT FOR CONSTRUCTION

BACKCHECK

US ARMY CORPS OF ENGINEERS
ALASKA DISTRICT

CONTRACT NO. _____
CONTRACTOR _____
CITY _____ STATE _____
Recommended: _____ PRIME CONTRACTOR
Approved: _____ RESIDENT ENGINEER
Date: _____

Symb	Action	Description	Date	Appvd

U.S. ARMY ENGINEER DISTRICT
CORPS OF ENGINEERS
ANCHORAGE, ALASKA

Designed: BFC
Drawn: BFC
Reviewed: C. VONGUNTEN
Chief — Section
Submitted: D. FRENER
Chief — Branch
Date: 16 JULY 2009
Dwg Scale: AS NOTED
Plot Scale: 1:2
File: FTW336A-080-M1-08
Drawing #: F-211-13-01

INV. NO. W911KB-09-R-0007
PN 65076
FTW336A

FT. WAINWRIGHT, ALASKA
AIRCRAFT PARTS STORAGE
MECHANICAL
PLANS
PLUMBING ISOMETRIC DIAGRAM

Reference number:
M1.08

Drawing x:\UNIFIED\EN-TE\Jobs\FTW336A\Dwgs\FTW336A-080-M1-08.dwg last saved on 7/15/2009 10:11 AM was plotted by Curfew, Donald L POA on 7/17/2009 6:48 AM

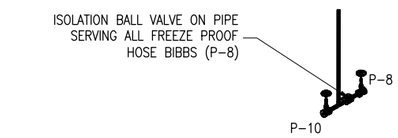

DETAIL AT HOSE BIBBS
NTS

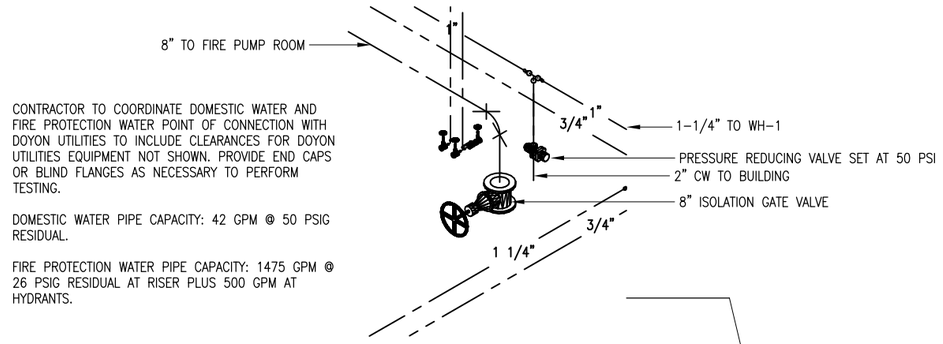

CONTRACTOR TO COORDINATE DOMESTIC WATER AND FIRE PROTECTION WATER POINT OF CONNECTION WITH DOYON UTILITIES TO INCLUDE CLEARANCES FOR DOYON UTILITIES EQUIPMENT NOT SHOWN. PROVIDE END CAPS OR BLIND FLANGES AS NECESSARY TO PERFORM TESTING.

DOMESTIC WATER PIPE CAPACITY: 42 GPM @ 50 PSIG RESIDUAL.

FIRE PROTECTION WATER PIPE CAPACITY: 1475 GPM @ 26 PSIG RESIDUAL AT RISER PLUS 500 GPM AT HYDRANTS.

DETAIL AT WATER ENTRANCE
NTS

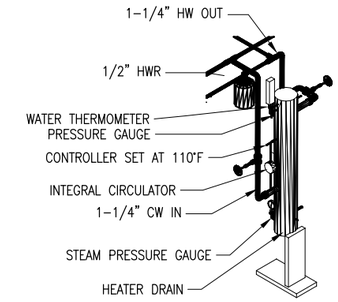

WH-1 DETAIL
NTS

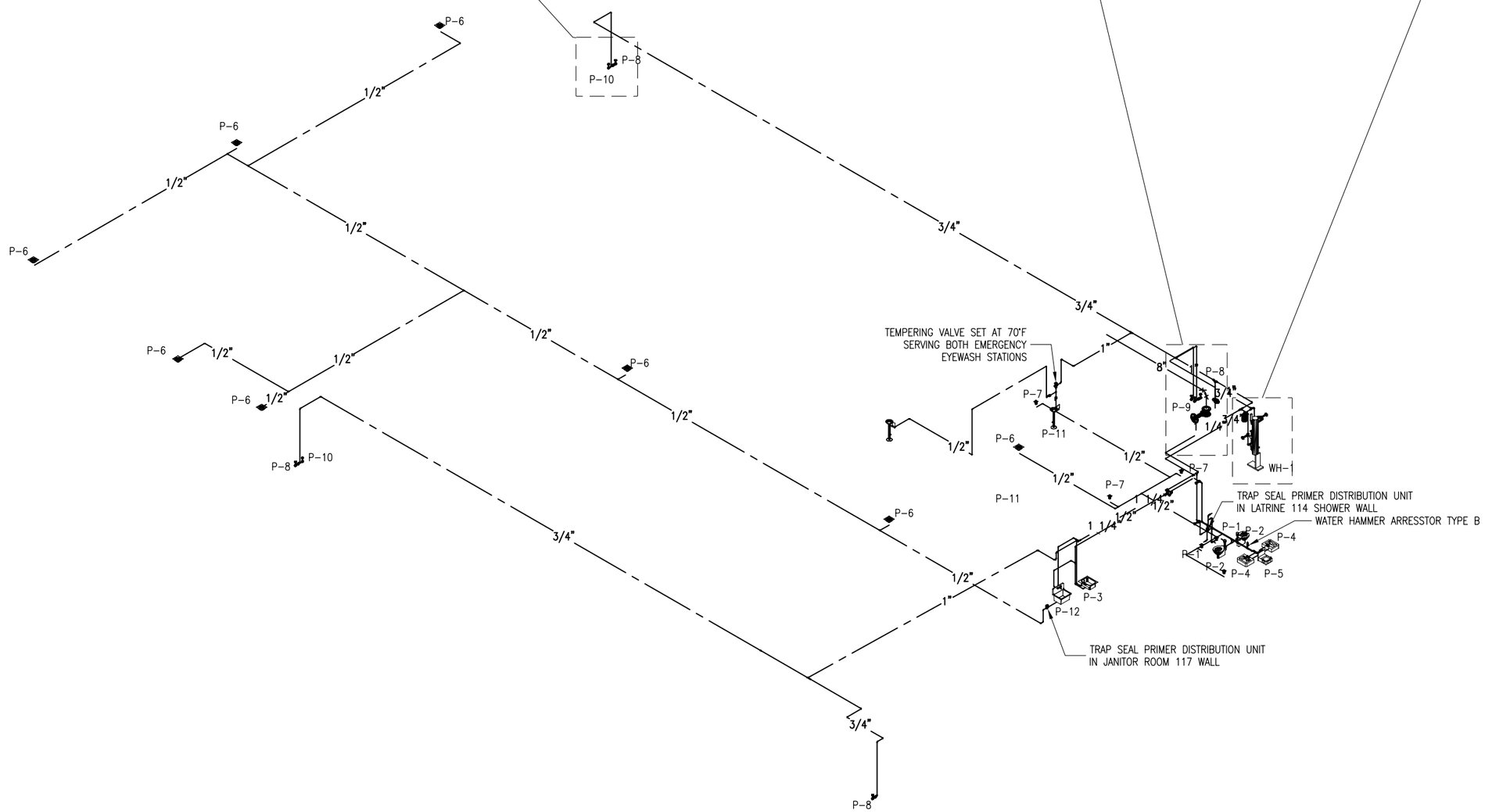

PLUMBING DOMESTIC WATER ISOMETRIC DIAGRAM
NTS

NOT FOR CONSTRUCTION
BACKCHECK

US ARMY CORPS OF ENGINEERS
ALASKA DISTRICT

CONTRACT NO. _____
CONTRACTOR _____
CITY _____ STATE _____
PRIME CONTRACTOR _____ Recommended: _____
RESIDENT ENGINEER _____ Approved: _____ Date: _____

Symb	Action	Description	Date	Appvd

U.S. ARMY ENGINEER DISTRICT
CORPS OF ENGINEERS
ANCHORAGE, ALASKA

Designed: BFC
Drawn: BFC
Reviewed: C. VONQUINTEN
Chief — Section
Submitted: D. FRENIER
Chief — Branch
Date: 16 JULY 2009
Dwg Scale: AS NOTED
Plot Scale: 1:2
File: FTW336A-081-M1-09
Drawing #: F-211-13-01

INV. NO. W911KB-09-R-0007
PN 65076
FTW336A

FT. WAINWRIGHT, ALASKA
AIRCRAFT PARTS STORAGE
MECHANICAL
PLANS
PLUMBING WATER PIPING ISOMETRIC DIAGRAM

Reference number:
M1.09
Sheet 81 of 118

Drawing x:\UNIFIED\EN-TE\Jobs\FTW336A\Dwgs\FTW336A-081-M1-09.dwg last saved on 7/15/2009 10:14 AM was plotted by Curfew, Donald L POA on 7/17/2009 6:48 AM

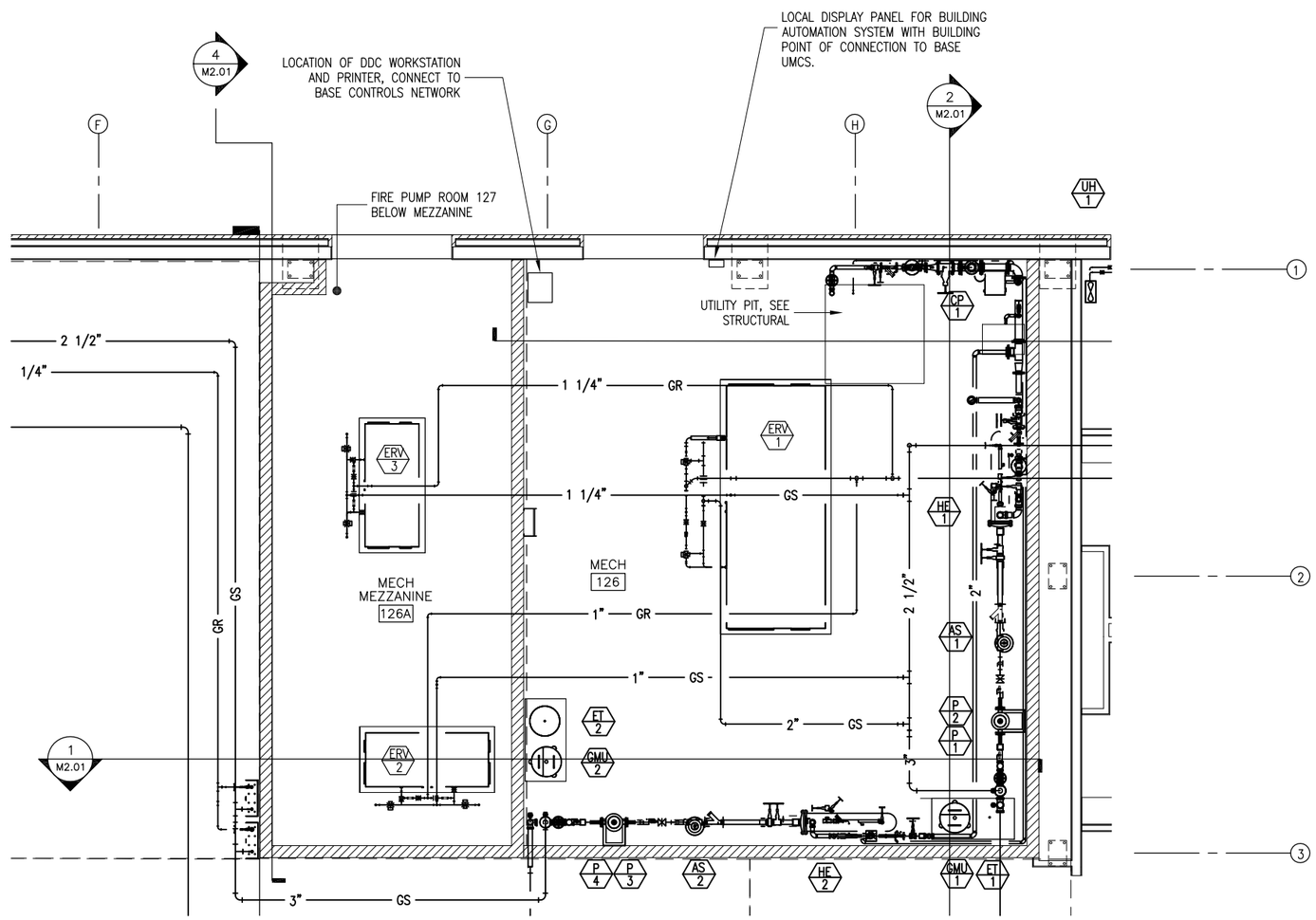

ENLARGED MECHANICAL ROOM FLOOR PLAN

1/4"=1'-0"

NOTE: PROVIDE CONCRETE HOUSEKEEPING PADS BENEATH ALL FLOOR MOUNTED EQUIPMENT IN THE MECHNAICAL ROOM, SEE DETAIL M3.03.

NOT FOR CONSTRUCTION

BACKCHECK

US ARMY CORPS OF ENGINEERS
ALASKA DISTRICT

CONTRACT NO. _____
CONTRACTOR _____
CITY _____ STATE _____
PRIME CONTRACTOR _____
Recommended: _____
Approved: _____
RESIDENT ENGINEER _____
Date: _____

Symb	Action	Description	Date	Appvd

U.S. ARMY ENGINEER DISTRICT
CORPS OF ENGINEERS
ANCHORAGE, ALASKA

Designed: BFC
Drawn: BFC
Reviewed: C. VONGUNTEN
Chief — CEPOA-EN-TE-MF — Section
Submitted: D. FRENER
Chief — CEPOA-EN-TE — Branch
Date: 16 JULY 2009
Dwg Scale: AS NOTED
Plot Scale: 1:2
File: FTW336A-082-M1-10
Drawing # F-211-13-01

PN 65076
INV. NO. W911KB-09-R-0007
FTW336A

FT. WAINWRIGHT, ALASKA
AIRCRAFT PARTS STORAGE
MECHANICAL
PLANS
ENLARGED MECHANICAL ROOM PLAN

Reference number:
M1.10

Drawing x:\UNIFIED\EN-TE\Jobs\FTW336A\Dwgs\FTW336A-082-M1-10.dwg last saved on 7/6/2009 3:13 PM was plotted by Curfew, Donald L POA on 7/17/2009 6:49 AM

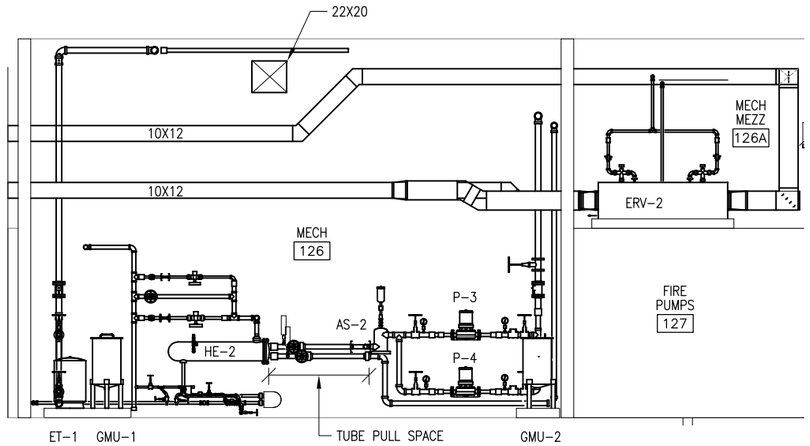

1 M2.01 MECHANICAL SECTION
1/4"=1'-0"

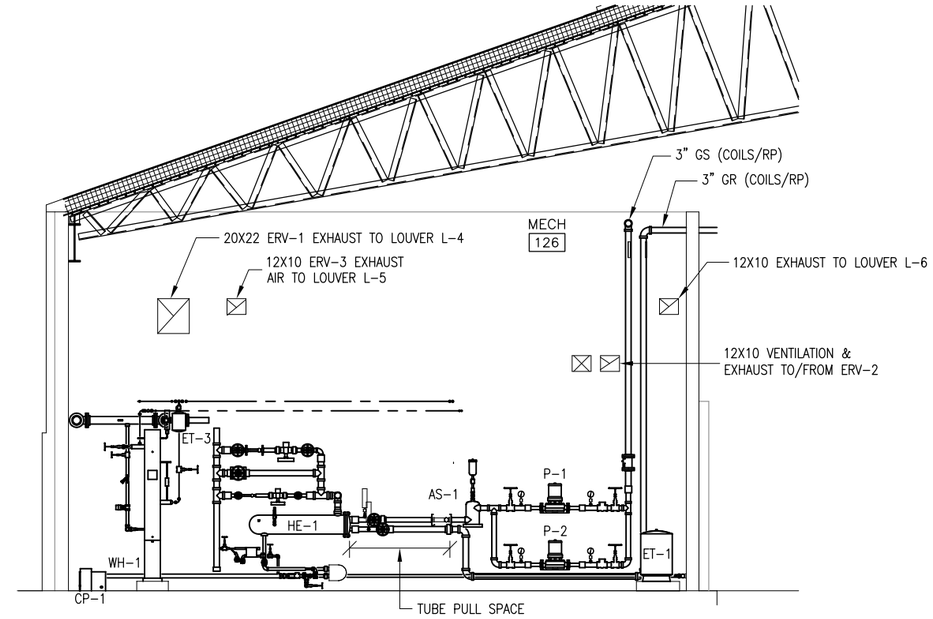

2 M2.01 MECHANICAL SECTION
1/4"=1'-0"

NOTE: SEE SHEET M3.05 FOR ADDITIONAL DETAILS OF THE STEAM PRESSURE REDUCING STATIONS, STEAM CONTROL STATIONS, AND HEAT EXCHANGER PIPING/FITTINGS.

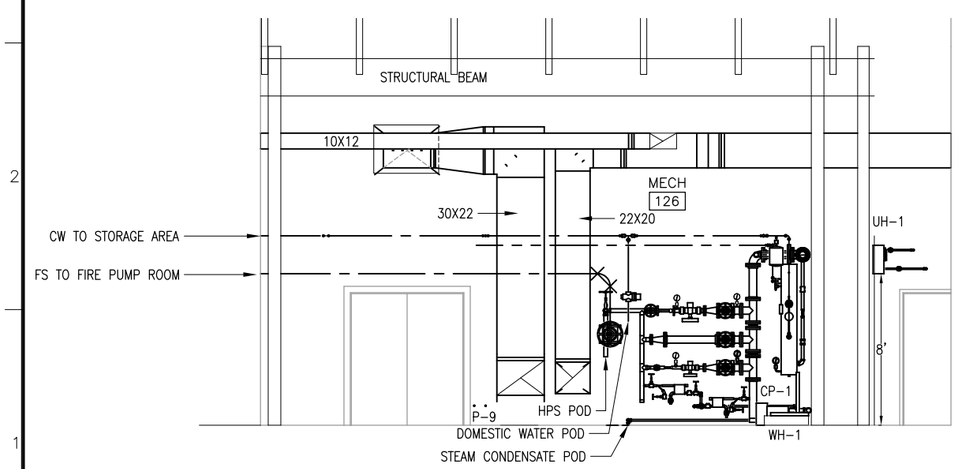

3 M2.01 MECHANICAL SECTION
1/4"=1'-0"

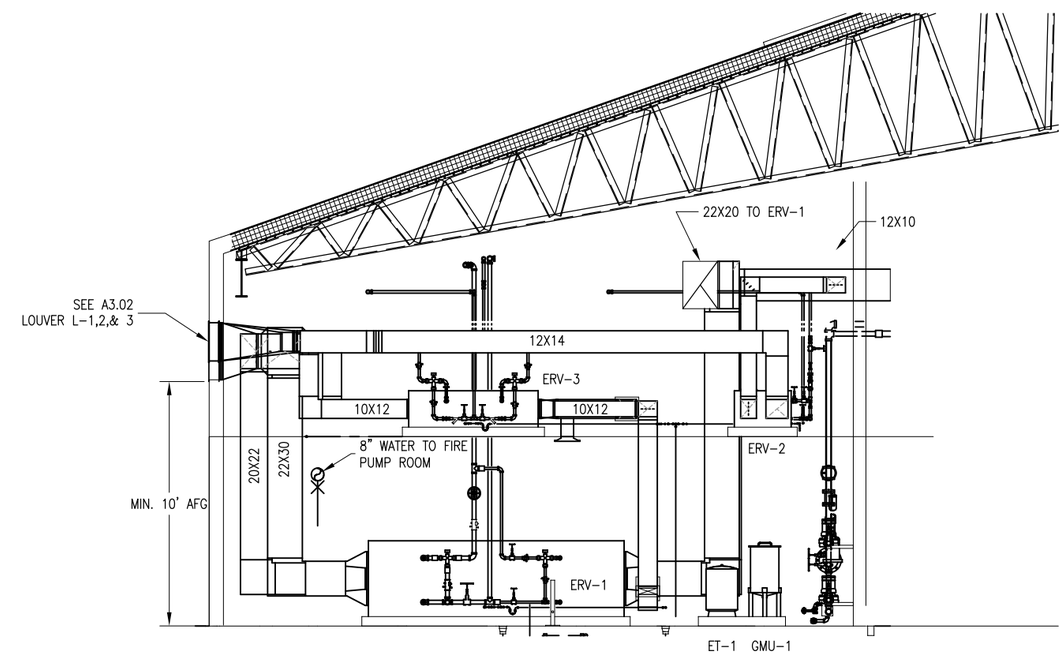

4 M2.01 MECHANICAL SECTION
1/4"=1'-0"

NOT FOR CONSTRUCTION
BACKCHECK

US ARMY CORPS OF ENGINEERS
ALASKA DISTRICT

CONTRACT NO. _____
CONTRACTOR _____
CITY _____ STATE _____
PRIME CONTRACTOR _____
Recommended: _____
RESIDENT ENGINEER _____
Approved: _____
Date: _____

Symb	Action	Description	Date	Appvd

U.S. ARMY ENGINEER DISTRICT
CORPS OF ENGINEERS
ANCHORAGE, ALASKA

Designed: BFC
Drawn: BFC
Reviewed: C. VONQUINTEN
Chief — GEOGA-EC-TE-MF Section
Submitted: D. FRENIER
Chief — GEOGA-EC-TE Branch
Date: 16 JULY 2009
Dwg Scale: AS NOTED
Plot Scale: 1:2
File: FTW336A-083-M2-01
Drawing # F-211-13-01

INV. NO. W911KB-09-R-0007
PN 65076
FTW336A

FT. WAINWRIGHT, ALASKA
AIRCRAFT PARTS STORAGE
MECHANICAL
SECTIONS
MECHANICAL ROOM SECTIONS

Reference number:
M2.01

Drawing x:\UNIFIED\EN-TE\Jobs\FTW336A\Dwgs\FTW336A-083-M2-01.dwg last saved on 7/6/2009 4:19 PM was plotted by Curfew, Donald L POA on 7/17/2009 6:50 AM

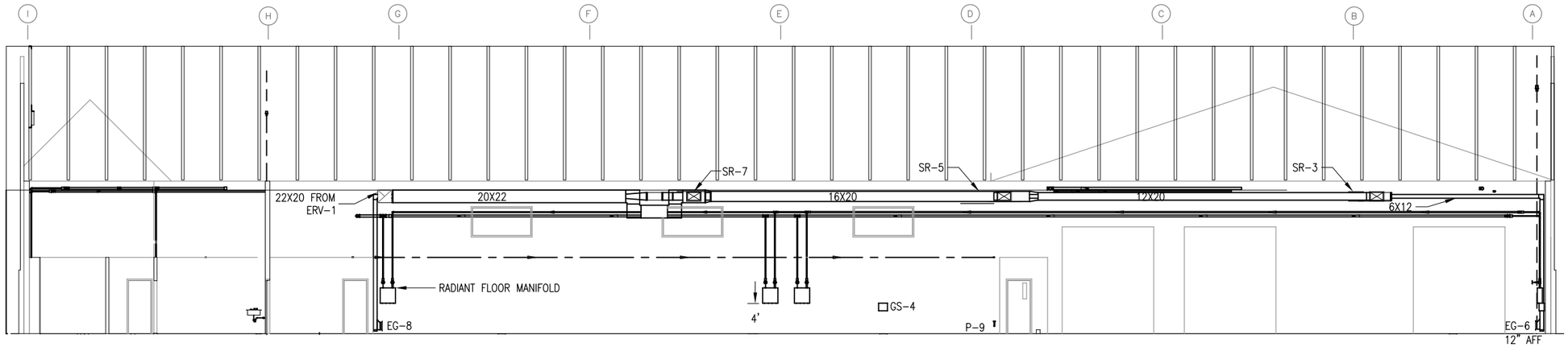

1 M2.02 MECHANICAL SECTION
NTS

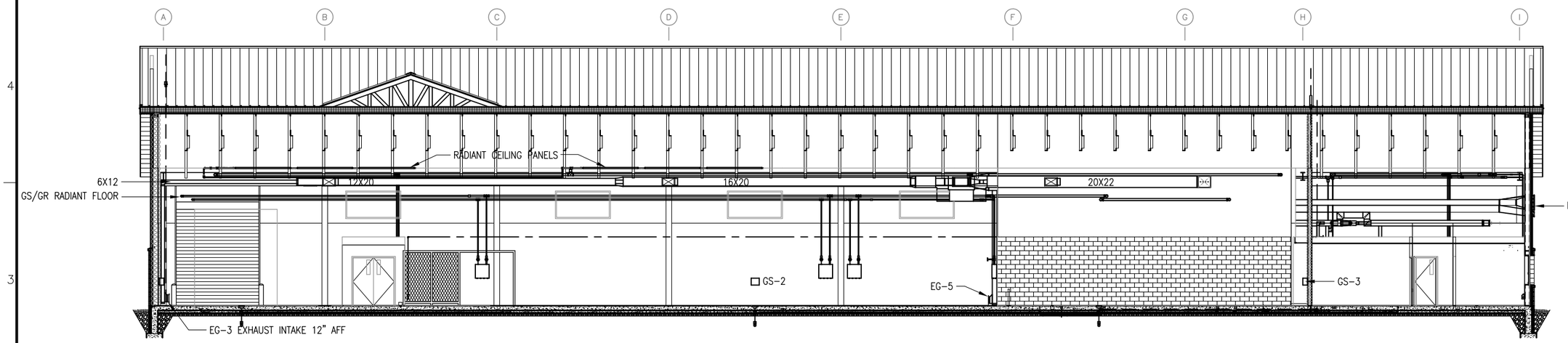

2 M2.02 MECHANICAL SECTION
NTS

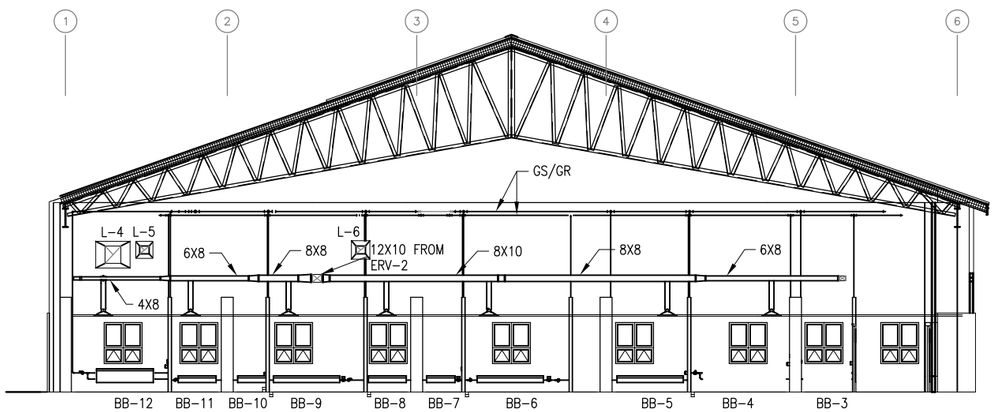

3 M2.02 MECHANICAL SECTION
NTS

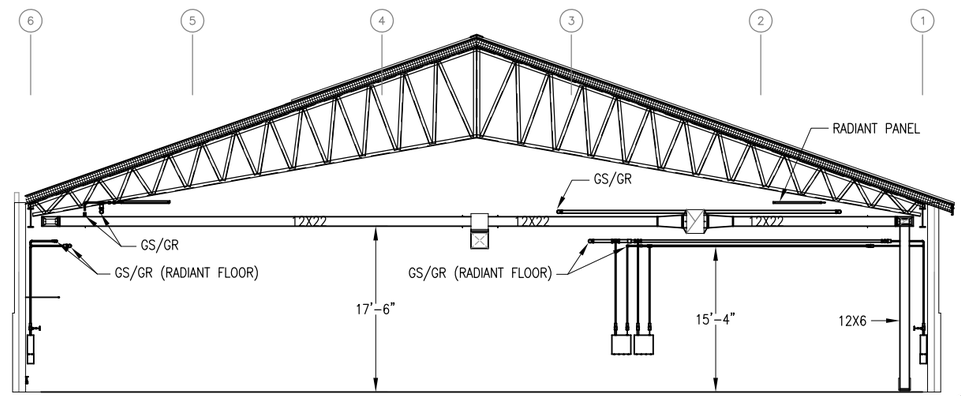

4 M2.02 MECHANICAL SECTION
NTS

NOT FOR CONSTRUCTION
BACKCHECK

US ARMY CORPS OF ENGINEERS
ALASKA DISTRICT

CONTRACT NO. _____
CONTRACTOR _____
CITY _____ STATE _____
PRIME CONTRACTOR _____
Recommended: _____
RESIDENT ENGINEER _____
Approved: _____
Date: _____

Symb	Action	Description	Date	Appvd

U.S. ARMY ENGINEER DISTRICT
CORPS OF ENGINEERS
ANCHORAGE, ALASKA

Designed: BFC
Drawn: BFC
Reviewed: C. VONGUNTEN
Chief: — G/PGA-PJ-TE-MF — Section
Submitted: D. FRENIER
Chief: — PGA-PJ-TE — Branch

Date: 16 JULY 2009
Dwg Scale: AS NOTED
Plot Scale: 1:2
Plot: FTW336A-084-M2-02
Drawing: F-F-211-13-01

INV. NO. W911KB-09-R-0007
PN 65076
FTW336A

FT. WAINWRIGHT, ALASKA
AIRCRAFT PARTS STORAGE
MECHANICAL
SECTIONS
SECTIONS

Reference number:
M2.02

Drawing x:\UNIFIED\EN-TE\Jobs\FTW336A\Dwgs\FTW336A-084-M2-02.dwg last saved on 7/15/2009 11:08 AM was plotted by Curfew, Donald L POA on 7/17/2009 6:51 AM

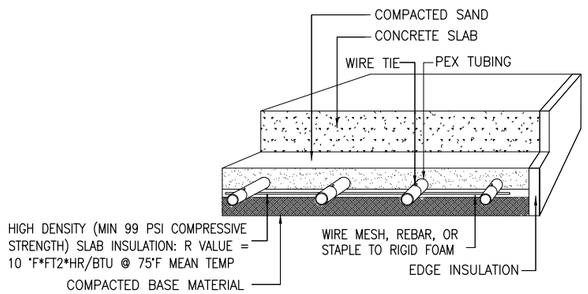

SLAB ON OR BELOW GRADE OVER A SAND BED DETAIL

N.T.S.

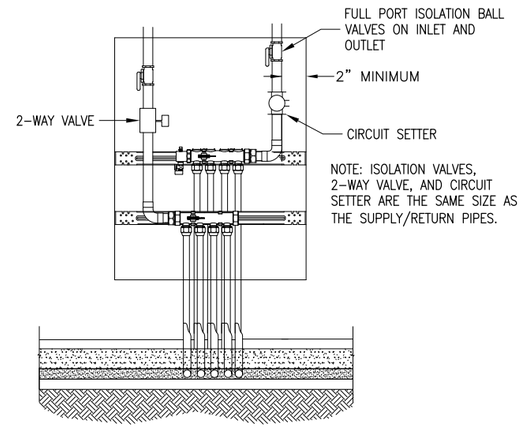

RADIANT SLAB MANIFOLD DETAIL (4 LOOPS SHOWN)

N.T.S.

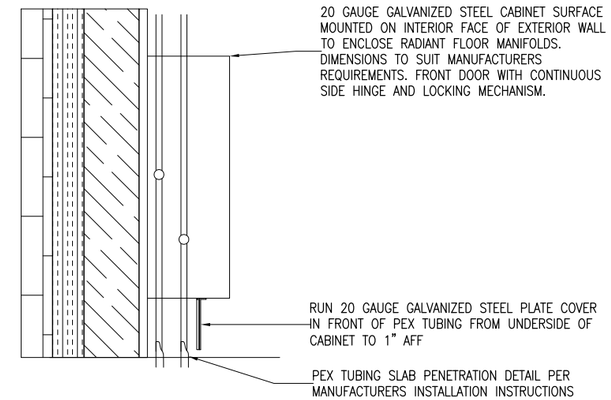

SECTION VIEW AT RADIANT SLAB MANIFOLD

N.T.S.

RADIANT FLOOR SYSTEM DATA

DESCRIPTION	# LOOPS	LOAD (BTUH)	FLOW (GPM)	SURFACE TEMP (°F)	WATER SUPPLY TEMP (°F)	SUPPLY/RETURN PIPE ø (IN)
RADIANT FLOOR ZONE 1	6	66726	7.3	87.5	114	1-1/4
RADIANT FLOOR ZONE 2	6	67007	7.4	87.5	114	1-1/4
RADIANT FLOOR ZONE 3	3	34899	3.8	87.5	114	1
RADIANT FLOOR ZONE 4	6	63773	7.0	87.5	114	1-1/4
RADIANT FLOOR ZONE 5	6	64256	7.1	87.5	114	1-1/4
RADIANT FLOOR ZONE 6	6	61409	6.8	87.5	114	1-1/4
RADIANT FLOOR ZONE 7	6	66565	7.3	87.5	114	1-1/4
RADIANT FLOOR ZONE 8	6	66841	7.4	87.5	114	1-1/4
RADIANT FLOOR ZONE 9	6	66841	7.4	87.5	114	1-1/4
RADIANT FLOOR ZONE 10	4	45769	5.0	87.5	114	1
		604,086	66.5			

NOT FOR CONSTRUCTION

BACKCHECK

US ARMY CORPS OF ENGINEERS
ALASKA DISTRICT

CONTRACT NO. ___
CONTRACTOR ___
CITY ___ STATE ___
PRIME CONTRACTOR — Recommended: ___
RESIDENT ENGINEER — Approved: ___ Date: ___

Num	Action	Description	Date	Appvd

U.S. ARMY ENGINEER DISTRICT
CORPS OF ENGINEERS
ANCHORAGE, ALASKA

Designed: BFC
Drawn: BFC
Reviewed: C. VONQUINTEN
Chief — CEPOA-EN-TE-ME — Section
Submitted: D. FRENIER
Chief — CEPOA-EN-TE — Branch
Date: 16 JULY 2009
Dwg Scale: AS NOTED
Plot Scale: 1:2
File: FTW336A-085-M3-01
Drawing #: F-211-13-01

INV. NO. W911KB-09-R-0007
PN 65076
FTW336A

FT. WAINWRIGHT, ALASKA
AIRCRAFT PARTS STORAGE
MECHANICAL
DETAILS
RADIANT FLOOR AND SNOWMELT DETAILS

Reference number:
M3.01

Drawing x:\UNIFIED\EN-TE\Jobs\FTW336A\Dwgs\FTW336A-085-M3-01.dwg last saved on 7/15/2009 11:35 AM was plotted by Curfew, Donald L POA on 7/17/2009 6:51 AM

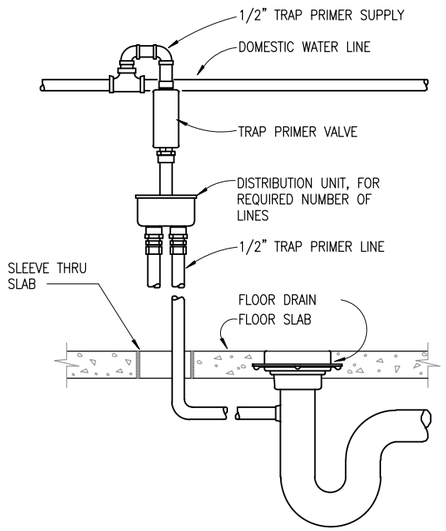

TRAP SEAL PRIMER DETAIL

N.T.S.

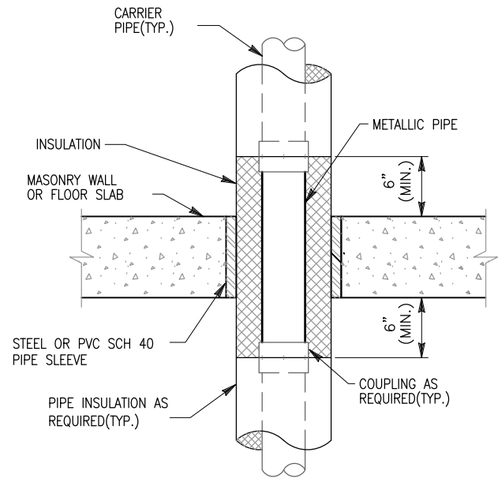

NOTE: PIPE SLEEVE SHALL BE SIZED TO PROVIDE 1/4" ALL AROUND CLEARANCE.

TYPICAL CONCRETE FLOOR OR MASONRY WALL PENETRATION

INSULATED OR NON-INSULATED, ABOVE GRADE
N.T.S.

NOTE: FOR THIS DETAIL, COORDINATE QUANTITY, LOCATION, AND DIMENSIONS OF UTILITY PENETRATIONS WITH DOYON UTILITIES. ANTICIPATED SIZE AND QUANTITY THROUGH THE MECHANICAL ROOM UTILITY PIT WALL IS:
STEAM – 2-1/2" PIPE WITH 2" INSULATION
CONDENSATE – 2" PIPE WITH 2" INSULATION
DOMESTIC WATER – 8" PIPE WITH 2" INSULATION
DOMESTIC WATER CIRCULATION – 2-1/2" PIPE WITH 2" INSULATION

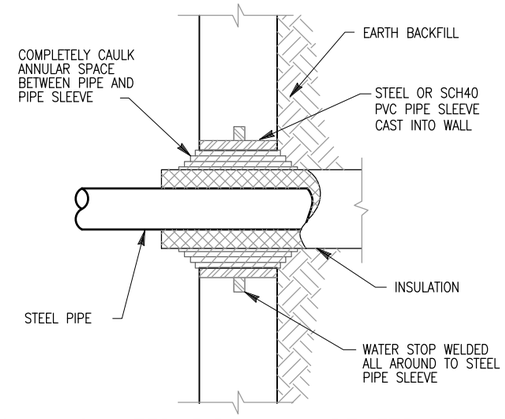

TYPICAL INSULATED PIPE WALL PENETRATION

BELOW GRADE
N.T.S.

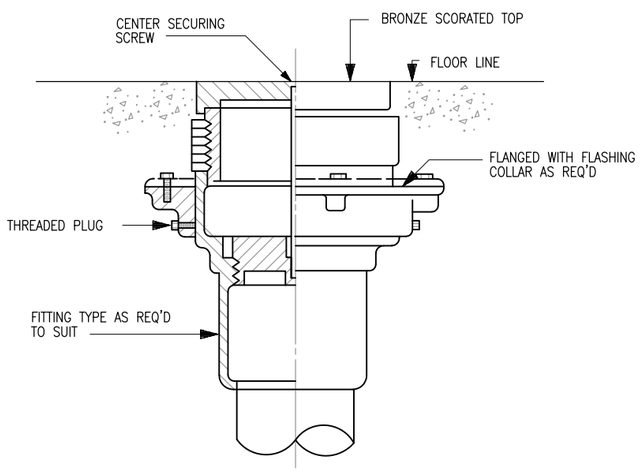

FLOOR CLEANOUT

N.T.S.

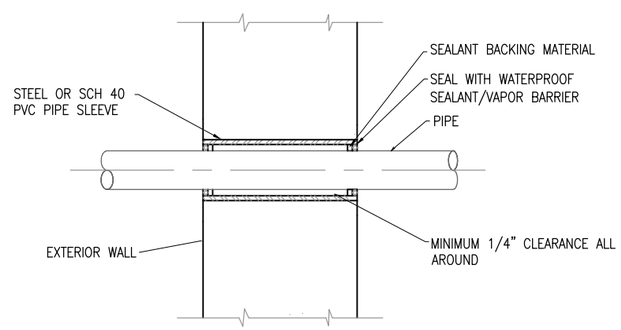

PIPE SLEEVE THRU EXTERIOR WALL DETAIL

N.T.S.

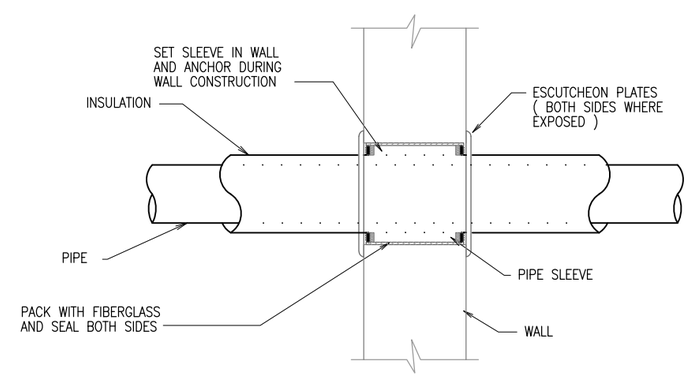

PIPE SLEEVE THRU INTERIOR WALL

N.T.S.

US ARMY CORPS OF ENGINEERS
ALASKA DISTRICT

CONTRACT NO. ___
CONTRACTOR ___
CITY ___ STATE ___
PRIME CONTRACTOR ___
Recommended: ___
RESIDENT ENGINEER ___
Approved: ___
Date: ___

Sym	Action	Description	Date	Appvd

U.S. ARMY ENGINEER DISTRICT
CORPS OF ENGINEERS
ANCHORAGE, ALASKA

Designed: BFC
Drawn: BFC
Reviewed: C. VONGUNTEN
Chief — GEOGA-EC-TE-MF — Section
Submitted: D. FRENIER
Chief — GEOGA-EC-TE — Branch
Date: 16 JULY 2009
Dwg Scale: AS NOTED
Plot Scale: 1:2
File: FTW336A-086-M3-02
Drawing #: F-211-13-01

INV. NO. W911KB-09-R-0007
PN 65076
FTW336A

FT. WAINWRIGHT, ALASKA
AIRCRAFT PARTS STORAGE
MECHANICAL
DETAILS
PIPING AND PLUMBING DETAILS

Reference number:
M3.02

NOT FOR CONSTRUCTION
BACKCHECK

Drawing x:\UNIFIED\EN-TE\Jobs\FTW336A\Dwgs\FTW336A-086-M3-02.dwg last saved on 7/7/2009 7:12 AM was plotted by Curfew, Donald L POA on 7/17/2009 6:51 AM

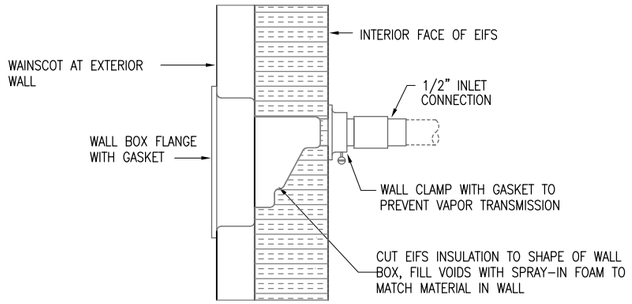

FREEZEPROOF HOSE BIBB DETAIL

N.T.S.

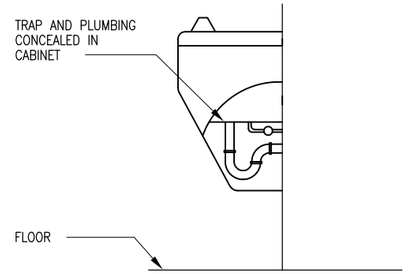

NOTES:

1. INSTALL ACCORDING TO MANUFACTURER'S INSTRUCTIONS.

WALL-HUNG DRINKING WATER COOLER

N.T.S.

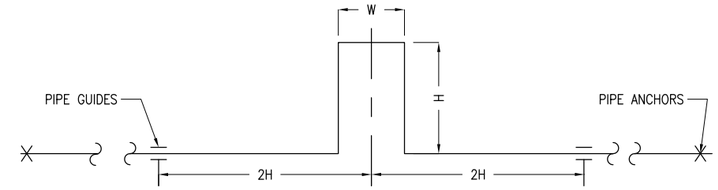

EXPANSION LOOP DIMENSIONS			
PIPE DESCRIPTION	PIPE DIAMETER (IN)	W – WIDTH (FT)	H – LENGTH (FT)
GS/GR	3	3.5	7
GS/GR	2-1/2	3.5	7
GS/GR	1-1/4	2	4
GS/GR	1	2	4

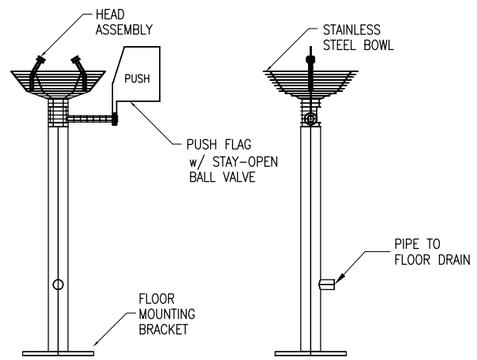

EMERGENCY EYEWASH DETAIL

N.T.S.

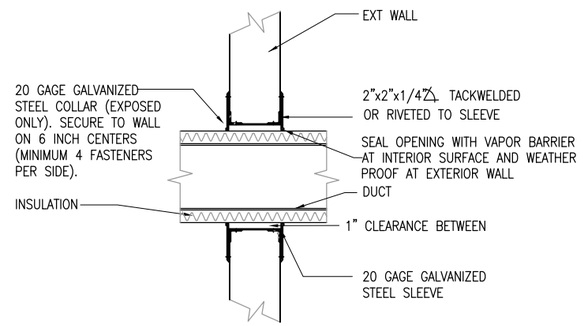

DUCT PENETRATION THROUGH WALL (NOT APPLICABLE TO FIRE-RATED WALLS)

N.T.S.

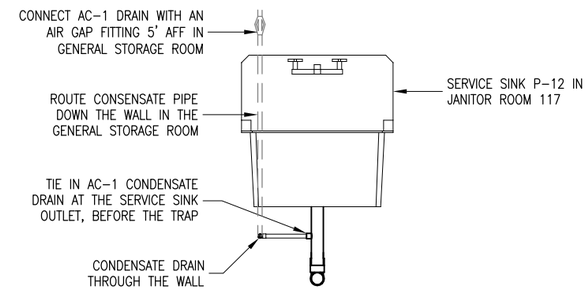

AC-1 CONDENSATE DETAIL

N.T.S.

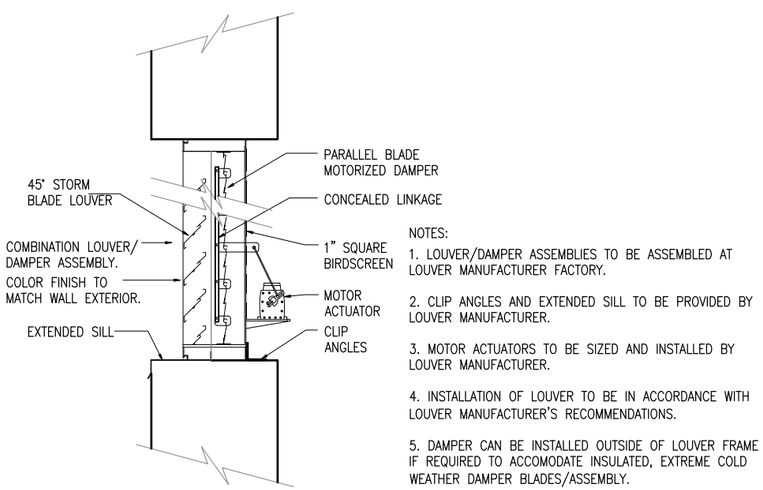

NOTES:

1. LOUVER/DAMPER ASSEMBLIES TO BE ASSEMBLED AT LOUVER MANUFACTURER FACTORY.
2. CLIP ANGLES AND EXTENDED SILL TO BE PROVIDED BY LOUVER MANUFACTURER.
3. MOTOR ACTUATORS TO BE SIZED AND INSTALLED BY LOUVER MANUFACTURER.
4. INSTALLATION OF LOUVER TO BE IN ACCORDANCE WITH LOUVER MANUFACTURER'S RECOMMENDATIONS.
5. DAMPER CAN BE INSTALLED OUTSIDE OF LOUVER FRAME IF REQUIRED TO ACCOMODATE INSULATED, EXTREME COLD WEATHER DAMPER BLADES/ASSEMBLY.

LOUVER/DAMPER DETAIL

N.T.S.

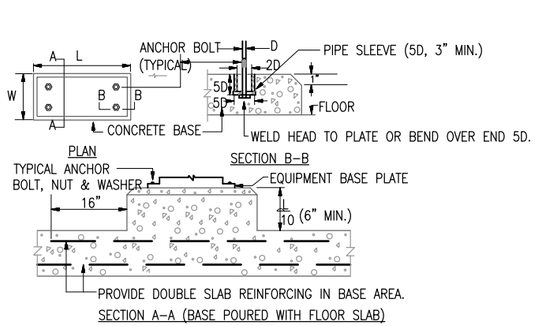

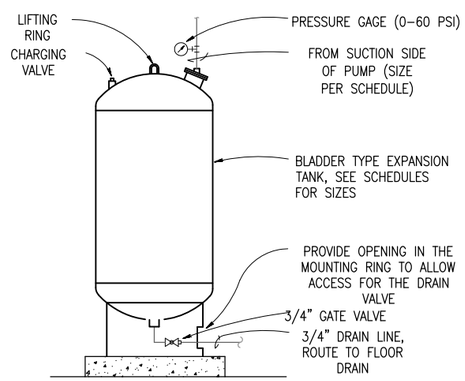

EXPANSION TANK DETAIL

N.T.S.

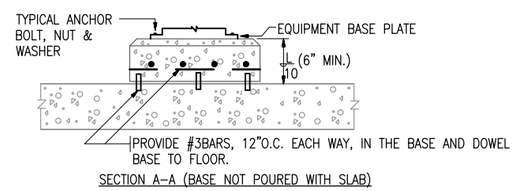

EQUIPMENT PAD DETAILS

N.T.S.

NOTE: 1. THIS DETAIL APPLIES TO EQUIPMENT NOT SPECIFIED TO BE MOUNTED ON SPRING ISOLATED BASES. 2. L AND W DIMENSIONS SHALL BE 8 INCHES GREATER THAN THE EQUIPMENT BASE PLATE.

NOT FOR CONSTRUCTION

BACKCHECK

US ARMY CORPS OF ENGINEERS
ALASKA DISTRICT

CONTRACT NO. _____
CONTRACTOR _____
CITY _____ STATE _____
PRIME CONTRACTOR — Recommended: _____
RESIDENT ENGINEER — Approved: _____ Date: _____

Symb	Action	Description	Date	Appvd

U.S. ARMY ENGINEER DISTRICT
CORPS OF ENGINEERS
ANCHORAGE, ALASKA

Designed: BFC
Drawn: BFC
Reviewed: C. VONGUNTEN
Chief — Section
Submitted: D. FRENER
Chief — Branch
Date: 16 JULY 2009
Dwg Scale: AS NOTED
Plot Scale: 1:2
File: FTW336A-087-M3-03
Drawing No. F-211-13-01

INV. NO. W911KB-09-R-0007
PN 65076
FTW336A

FT. WAINWRIGHT, ALASKA
AIRCRAFT PARTS STORAGE
MECHANICAL
DETAILS
MECHANICAL DETAILS

Reference number:
M3.03

Drawing x:\UNIFIED\EN-TE\Jobs\FTW336A\Dwgs\FTW336A-087-M3-03.dwg last saved on 7/7/2009 7:14 AM was plotted by Curfew, Donald L POA on 7/17/2009 6:51 AM

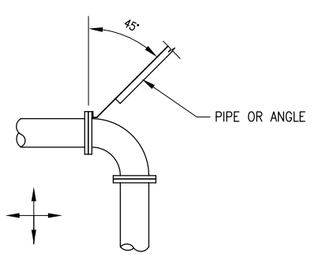

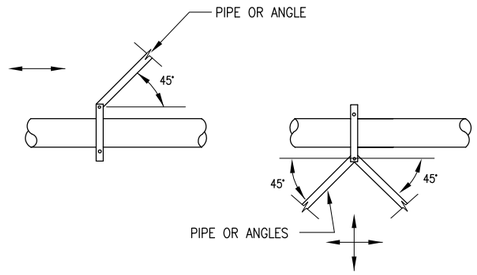

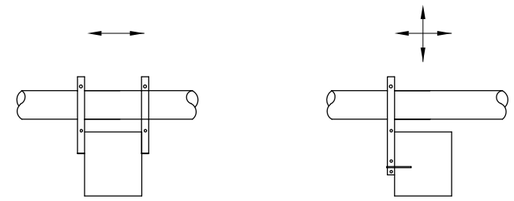

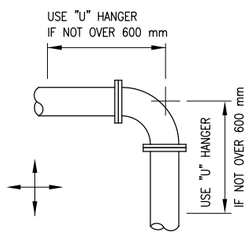

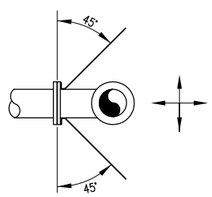

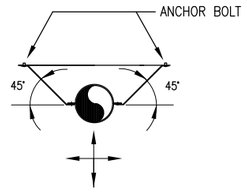

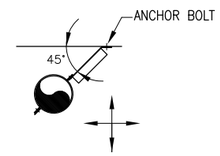

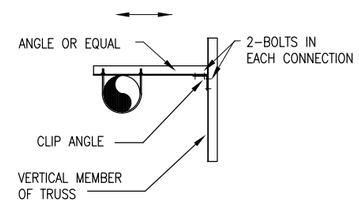

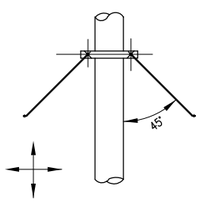

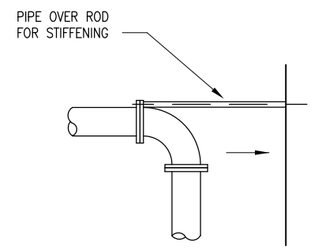

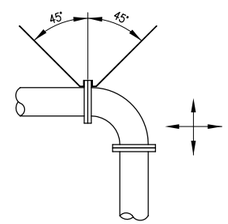

SEISMIC DETAILS FOR PIPE SWAY BRACING

NTS

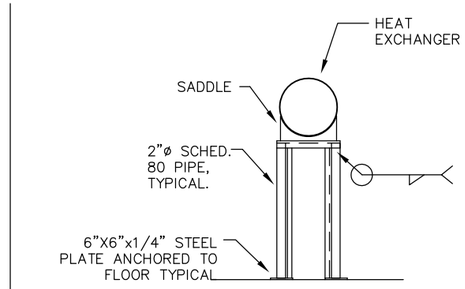

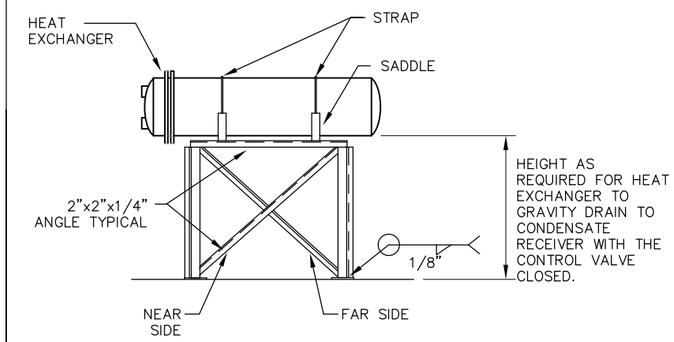

HEAT EXCHANGER SUPPORT DETAIL

NTS

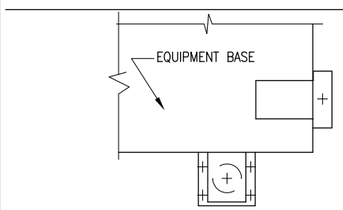

PLAN

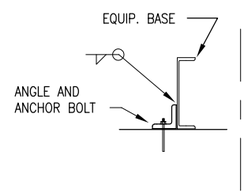

DETAIL "A"

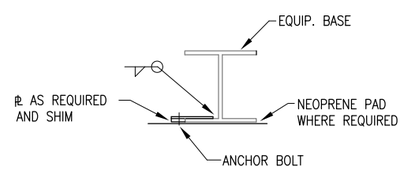

DETAIL "B"

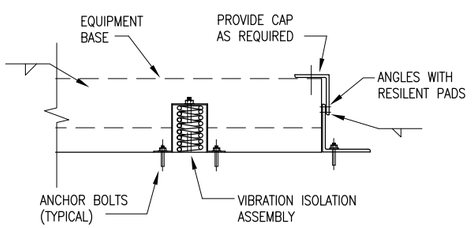

DETAIL C

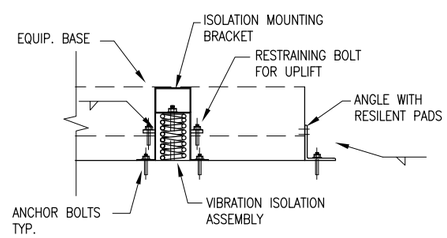

DETAIL D

SEISMIC RESTRAINT FOR FLOOR MOUNTED EQUIPMENT

NTS

NOTE: DETAILS ARE FROM UFC
3-310-04 22 JUNE 2007

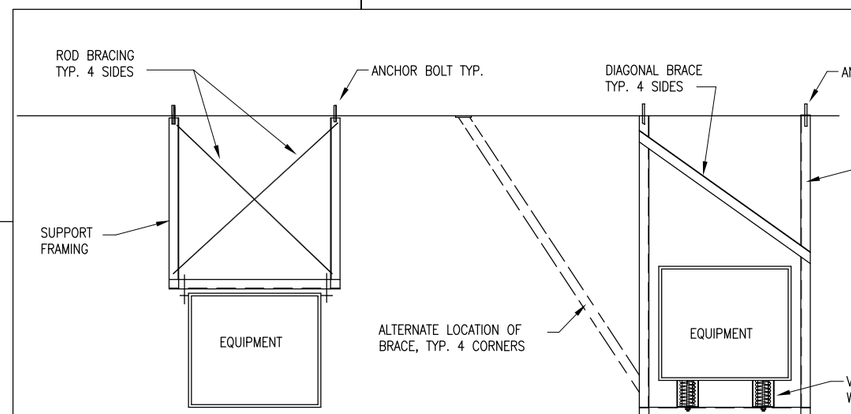

DETAIL "A"

DETAIL "B"

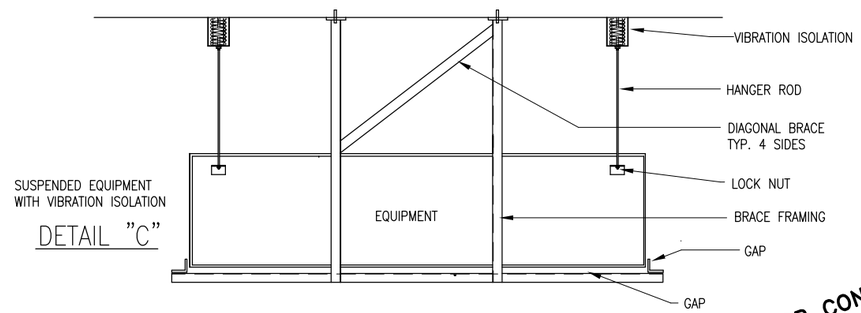

DETAIL "C"

SEISMIC RESTRAINT FOR SUSPENDED EQUIPMENT

NTS

NOT FOR CONSTRUCTION

BACKCHECK

US ARMY CORPS OF ENGINEERS
ALASKA DISTRICT

CONTRACT NO. ___
CONTRACTOR ___
CITY ___ STATE ___
PRIME CONTRACTOR ___ Recommended: ___
RESIDENT ENGINEER ___ Approved: ___ Date: ___

Num	Action	Description	Date	Appvd

U.S. ARMY ENGINEER DISTRICT
CORPS OF ENGINEERS
ANCHORAGE, ALASKA

Designed: BFC
Drawn: BFC
Reviewed: C. VONGUNTEN
Chief — Section
Submitted: D. FRENER
Chief — Branch
Date: 16 JULY 2009
Dwg Scale: AS NOTED
Plot Scale: 1:2
File: FTW336A-088-M3-04
Drawing #: F-211-13-01

INV. NO. W911KB-09-R-0007
PN 65076
FTW336A

FT. WAINWRIGHT, ALASKA
AIRCRAFT PARTS STORAGE
MECHANICAL
DETAILS
SEISMIC RESTRAINT DETAILS

Reference number:
M3.04

Drawing x:\UNIFIED\EN-TE\Jobs\FTW336A\Dwgs\FTW336A-088-M3-04.dwg last saved on 5/12/2009 9:06 AM was plotted by Curfew, Donald L POA on 7/17/2009 6:51 AM

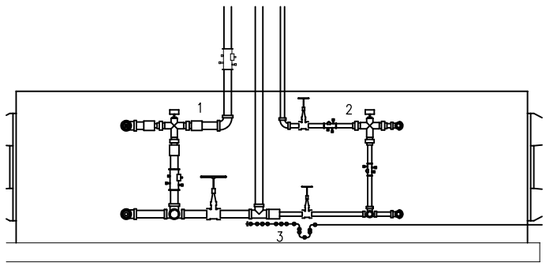

ERV–1 PIPING DETAIL

NTS

1. PREHEAT COIL; 2" SUPPLY AND RETURN PIPE TO COIL, 2" ISOLATION BUTTERFLY VALVES ON GS AND GR, 2" STRAINER ON GS BEFORE 3–WAY VALVE, 3–WAY VALVE (CV=16) WITH BYPASS ON GR, 2" CIRCUIT SETTER (CV=62.3) ON GR, THERMOMETER ON GS AND GR, CIRCUIT SETTER (CV=62.3) ON BYPASS.
2. HEATING COIL; 1–1/4" SUPPLY AND RETURN PIPE TO COIL, 1–1/4" FULL PORT ISOLATON BALL VALVES ON GS AND GR, 1–1/4" STRAINER ON GS BEFORE 3–WAY VALVE, 3–WAY VALVE (CV=6.3) WITH BYPASS ON GR, 1–1/4" CIRCUIT SETTER (CV=17.3) ON GR, THERMOMETER ON GS AND GR, CIRCUIT SETTER (CV=17.3) ON BYPASS.
3. CONDENSATE PIPES; 1" FROM UNIT TO FLOOR DRAIN

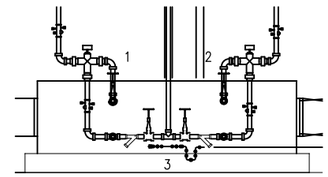

ERV–2&3 PIPING DETAIL

NTS

1. PREHEAT COIL; 1" UNION CONNECTIONS TO COIL, ISOLATON BALL VALVES ON GS AND GR, STRAINER ON GS BEFORE 3–WAY VALVE, 3–WAY VALVE (CV=4) WITH BYPASS ON GR, CIRCUIT SETTER (CV=8.4) ON GR, THERMOMETER ON GS AND GR, CIRCUIT SETTER (CV=8.4) ON BYPASS.
2. HEATING COIL; 3/4" UNION CONNECTIONS TO COIL, ISOLATON BALL VALVES ON GS AND GR, STRAINER ON GS BEFORE 3–WAY VALVE, 3–WAY VALVE (CV=4) WITH BYPASS ON GR, CIRCUIT SETTER (CV=3.9) ON GR, THERMOMETER ON GS AND GR, CIRCUIT SETTER (CV=3.9) ON BYPASS.
3. CONDENSATE PIPES; 3/4" WITH TRAP AND CLEANOUT FROM ERV TO MECHANICAL ROOM FLOOR DRAIN

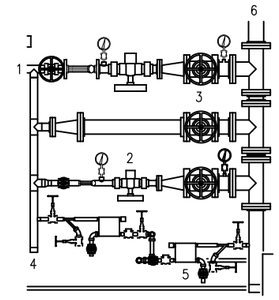

STEAM PRESSURE REDUCING STATION DETAIL

NTS

1. HPS MAIN
2. PRESSURE REDUCING VALVE WITH GATE VALVE AND PRESSURE GAUGE ON BOTH SIDES, STRAINER ON INLET
3. BYPASS VALVE
4. HPS DRIP LEG TRAP STATION WITH GATE VALVE AND STRAINER WITH BLOWDOWN VALVE AT INLET, TEST VALVE, CHECK VALVE AND GATE VALVE ON OUTLET
5. LPS DRIP LEG TRAP STATION WITH GATE VALVE AND STRAINER WITH BLOWDOWN VALVE AT INLET, TEST VALVE, CHECK VALVE AND GATE VALVE ON OUTLET
6. LPS OUTLET TO HE–1 STEAM STATION

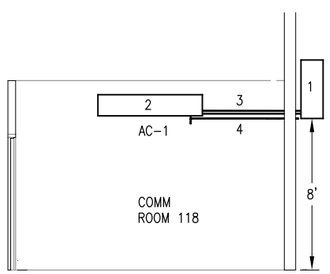

AC–1 DETAIL

NTS

1. AIR COOLED CONDENSING UNIT MOUNTED TO GENERAL STORAGE ROOM WALL
2. FAN COIL UNIT
3. REFRIGERANT LIQUID (1/4" ø) AND GAS (3/8"ø) PIPING
4. CONDENSATE PIPING (1/2ø)

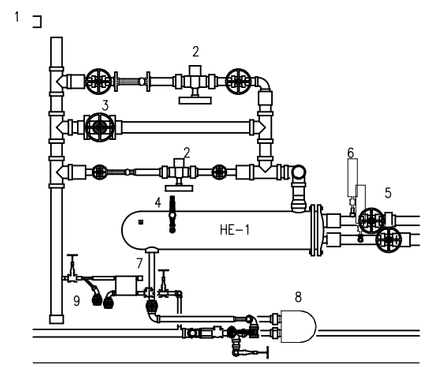

HE–1 STEAM CONTROL VALVE/HE–1 DETAIL

NTS

1. LPS
2. STEAM CONTROL VALVE WITH GATE VALVE ON BOTH SIDES, STRAINER ON INLET
3. BYPASS VALVE
4. VACUUM BREAKER
5. GATE VALVE ON INLET AND OUTLET TO HE–1
6. THERMOMETERS ON INLET AND OUTLET OF HE–1
7. CONDENSATE WITH GATE VALVE
8. HE–1 STEAM TRAP WITH UNION CONNECTIONS, ISOLATION VALVE ON BOTH SIDES, WYE STRAINER WITH BLOWDOWN VALVE, TEST VALVE, CHECK VALVE ON DISCHARGE.
9. LPS DRIP LEG STEAM TRAP WITH UNION CONNECTIONS, ISOLATION VALVE ON BOTH SIDES, WYE STRAINER WITH BLOWDOWN VALVE, TEST VALVE, CHECK VALVE ON DISCHARGE.

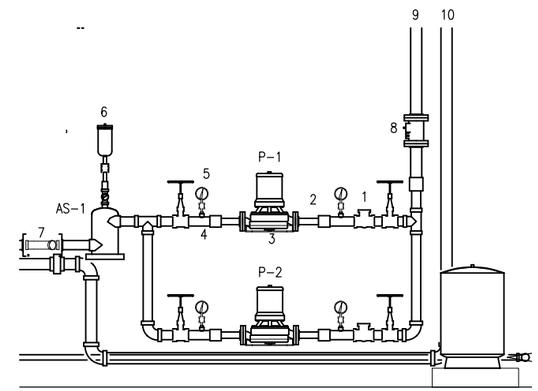

P–1/2 DETAIL

NTS

1. GATE VALVE AND CHECK VALVE ON DISCHARGE PIPE
2. DISCHARGE PIPE WITH FLEX CONNECTION & REDUCER
3. STEEL SUPPORT FOR PUMP HOUSING
4. SUCTION PIPING WITH FLEX PIPING & REDUCER
5. PRESSURE GAUGE ON BOTH SIDES OF PUMP
6. AUTO AIR VENT WITH ISOLATION BALL VALVE
7. INLINE WYE STRAINER
8. BALANCING VALVE, CIRCUIT SETTER
9. GS TO COILS AND RADIANT PANELS
10. GR TO HE–1

NOTE: RADIANT FLOOR PIPE IS 3"ø TO AND FROM P–1&2, REDUCE AT PUMP INLET AND OUTLET.

PLAN VIEW

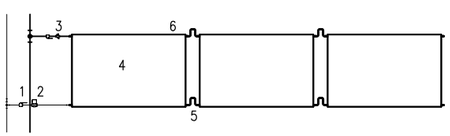

1. ISOLATION BALL VALVES ON SUPPLY AND RETURN PIPING.
2. 2–WAY CONTROL VALVE ON SUPPLY PIPING.
3. CIRCUIT SETTER VALVE
4. RADIANT PANELS
5. FLEXIBLE PIPE CONNECTORS BETWEEN PANELS
6. MANUAL AIR VENTS
7. THREADED ROD SUPPORT TO STRUCTURE PER MANUFACTURER

ELEVATION VIEW

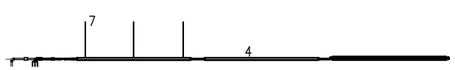

RP–1~5 RADIANT PANEL DETAIL

NTS

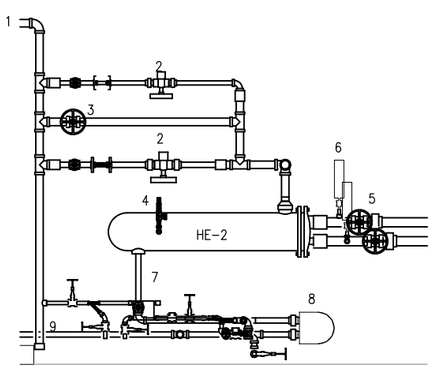

HE–2 STEAM CONTROL VALVE/HE–2 DETAIL

NTS

1. LPS
2. STEAM CONTROL VALVE WITH GATE VALVE ON BOTH SIDES, STRAINER ON INLET
3. BYPASS VALVE
4. VACUUM BREAKER
5. GATE VALVE ON INLET AND OUTLET TO HE–2
6. THERMOMETERS ON INLET AND OUTLET OF HE–2
7. CONDENSATE WITH GATE VALVE
8. HE–2 STEAM TRAP WITH UNION CONNECTIONS, ISOLATION VALVE ON BOTH SIDES, WYE STRAINER WITH BLOWDOWN VALVE, TEST VALVE, CHECK VALVE ON DISCHARGE.
9. LPS DRIP LEG STEAM TRAP WITH UNION CONNECTIONS, ISOLATION VALVE ON BOTH SIDES, WYE STRAINER WITH BLOWDOWN VALVE, TEST VALVE, CHECK VALVE ON DISCHARGE.

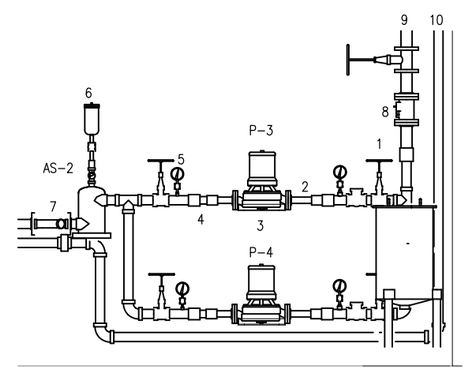

P–3/4 DETAIL

NTS

1. GATE VALVE AND CHECK VALVE ON DISCHARGE PIPE
2. DISCHARGE PIPE WITH FLEX CONNECTION & REDUCER
3. STEEL SUPPORT FOR PUMP HOUSING
4. SUCTION PIPING WITH FLEX PIPING & REDUCER
5. PRESSURE GAUGE ON BOTH SIDES OF PUMP
6. AUTO AIR VENT WITH ISOLATION BALL VALVE
7. INLINE WYE STRAINER
8. BALANCING VALVE, CIRCUIT SETTER
9. GS (RADIANT FLOOR) WITH GATE VALVE.
10. GR (RADIANT FLOOR) TO HE–2

NOTE: RADIANT FLOOR PIPE IS 3"ø TO AND FROM P–3&4, REDUCE AT PUMP INLET AND OUTLET.

NOT FOR CONSTRUCTION

BACKCHECK

US ARMY CORPS OF ENGINEERS
ALASKA DISTRICT

CONTRACT NO. ___
CONTRACTOR ___
CITY ___ STATE ___
PRIME CONTRACTOR — Recommended: ___
RESIDENT ENGINEER — Approved: ___ Date: ___

Symb	Action	Description	Date	Appvd

U.S. ARMY ENGINEER DISTRICT
CORPS OF ENGINEERS
ANCHORAGE, ALASKA

Designed: BFC
Drawn: BFC
Reviewed: C. VONGUNTEN
Chief — CEPOA-DE-TE-MP — Section
Submitted: D. FREIMER
Chief — CEPOA-DE-TE — Branch
Date: 16 JULY 2009
Dwg Scale: AS NOTED
Plot Scale: 1:2
File: FTW336A-089-M3-05
Drawing No. F-211-13-01

PN 65076
INV. NO. W911KB-09-R-0007
FTW336A

FT. WAINWRIGHT, ALASKA
AIRCRAFT PARTS STORAGE
MECHANICAL
DETAILS
MECHANICAL DETAILS

Reference number:
M3.05

Drawing x:\UNIFIED\EN-TE\Jobs\FTW336A\Dwgs\FTW336A-089-M3-05.dwg last saved on 7/7/2009 7:18 AM was plotted by Curfew, Donald L POA on 7/17/2009 6:54 AM

CONTROL LEGEND

AL XX-XX	ALARM
CO XX-XX	CARBON MONOXIDE SENSOR
DPS XX-XX	DIFFERENTIAL-PRESSURE SWITCH
HT XX-XX	RELATIVE-HUMIDITY TRANSMITTER, DUCT-MOUNTED
SD XX-XX	SMOKE DETECTOR, DUCT-MOUNTED
SS XX-XX	START/STOP
T XX-XX	WALL MOUNTED TEMPERATURE SENSOR/USER INPUT DEVICE
TSL XX-XX	THERMOSTAT, LOW-TEMPERATURE PROTECTION
TT XX-XX	TEMPERATURE TRANSMITTER, DUCT-MOUNTED
	ELECTRONIC SIGNALS (SCHEMATICS)
SC XX-XX	SPEED CONTROLLER/STARTER (2 SPEED - HIGH/LOW/OFF)

TG	TEMPERATURE GAUGE
PG	PRESSURE GAUGE
AI	ANALOG INPUT TO BAS
AO	ANALOG OUTPUT FROM BAS
DI	DIGITAL INPUT TO BAS
DO	DIGITAL OUTPUT FROM BAS
NO	NORMALLY OPEN
NC	NORMALLY CLOSED
VFD	VARIABLE FREQUENCY DRIVE
	HVAC EQUIPMENT IDENTIFIER

C, NC, NO	VALVE, 3-WAY MIXING
NC	VALVE, NORMALLY CLOSED
NO	VALVE, NORMALLY OPEN
	SOLENOID VALVE/ACTUATED CONTROL VALVE
	DAMPER, PARALLEL-BLADE WITH SEALS
DA XX-XX	ACTUATOR, DAMPER, ELECTRIC OR ELECTRONIC
VA XX-XX	ACTUATOR, VALVE, ELECTRIC OR ELECTRONIC
	THERMOWELL

HE	TUBE AND SHELL HEAT EXCHANGER
HC, H, C	COIL, HEATING
P, C	COIL, OUTSIDE-AIR PREHEAT
	FAN
	FILTER
P	PUMP
FT XX-XX	AFMA: AIR-FLOW MEASURING ARRAY AND TRANSMITTER
ACCU	AIR COOLED CONDENSING UNIT

SYSTEM IDENTIFIERS:
E1: ERV-1
E2: ERV-2
E3: ERV-3
GM: GMU-1/2
HS: ERV COIL GLYCOL LOOP
RH: RADIANT FLOOR GLYCOL LOOP

XXXX XX-XX — FIELD-MOUNTED DEVICE

UPPER FIELD OF UNIQUE IDENTIFIER FOR DEVICE
LOWER FIELD OF UNIQUE IDENTIFIER FOR DEVICE
XXXX XX-XX — HVAC CONTROL-PANEL-MOUNTED DEVICE

2-DIGIT IDENTIFIER FOR SPECIFIC DEVICE
XX-XX
2-DIGIT SYSTEM IDENTIFIER
LOWER FIELD OF UNIQUE IDENTIFIER FOR DEVICE

MAXIMUM OF 4 ALPHABETICAL CHARACTERS FOR DEVICE TYPE — XXXX
UPPER FIELD OF UNIQUE IDENTIFIER FOR DEVICE

NOT FOR CONSTRUCTION
BACKCHECK

US ARMY CORPS OF ENGINEERS
ALASKA DISTRICT

CONTRACT NO. _____
CONTRACTOR _____
CITY _____ STATE _____
Recommended: _____ PRIME CONTRACTOR
Approved: _____ RESIDENT ENGINEER
Date: _____

Symb	Action	Description	Date	Appvd

U.S. ARMY ENGINEER DISTRICT
CORPS OF ENGINEERS
ANCHORAGE, ALASKA

Designed: BFC
Drawn: BFC
Reviewed: C. VONGUNTEN
Chief: — CEPOA-EQ-ME — Section
Submitted: D. FRENER
Chief: — CEPOA-EQ-ME — Branch
Date: 16 JULY 2009
Dwg Scale: AS NOTED
Plot Scale: 1:2
File: FTW336A-090-M4-01
Drawing #: F-211-13-01

INV. NO. W911KB-09-R-0007
PN 65076
FTW336A

FT. WAINWRIGHT, ALASKA
AIRCRAFT PARTS STORAGE
MECHANICAL
CONTROLS
CONTROL LEGEND

Reference number:
M4.01

Drawing x:\UNIFIED\EN-TE\Jobs\FTW336A\Dwgs\FTW336A-090-M4-01.dwg last saved on 7/7/2009 7:24 AM was plotted by Curfew, Donald L POA on 7/17/2009 6:54 AM

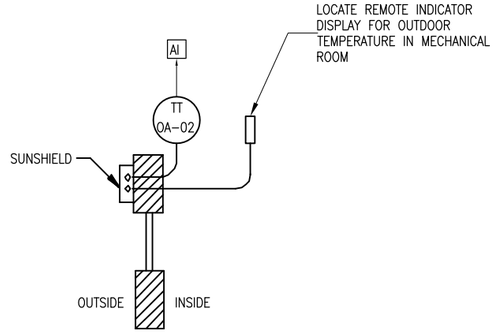

OUTSIDE AIR TEMPERATURE SENSOR

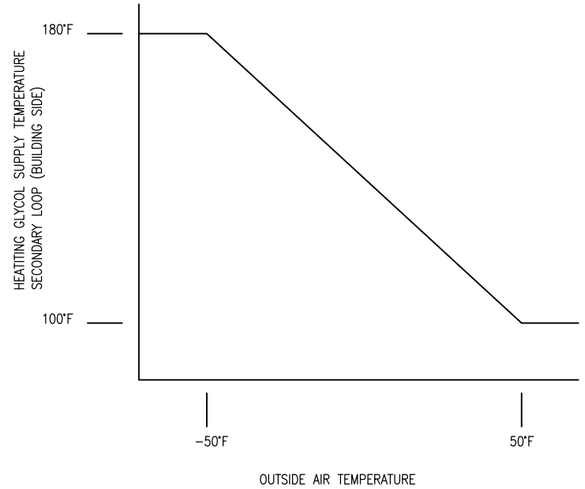

GLYCOL HEATING SUPPLY TEMPERATURE RESET SCHEDULE (HE-1 ONLY)

SEQUENCE OF OPERATION FOR THE HEATING COIL AND RADIANT PANEL SYSTEM

UPON CALL FOR HEATING, THE BUILDING AUTOMATION SYSTEM (BAS) INITATES THE PLANT OPERATION BY STARTING ONE OF THE CIRCULATION PUMPS. THE STEAM CONTROL VALVES MODULATE THE STEAM FLOW TO THE HEAT EXCHANGER TO MAINTAIN THE GLYCOL SUPPLY TEMPERATURE BASED ON THE OUTSIDE AIR RESET SCHEDULE. THE SMALLER STEAM CONTROL VALVE MODULATES OPEN FIRST. IF THE SMALLER VALVE IS FULLY OPEN AND THE SUPPLY GLYCOL TEMPERATURE SETPOINT CANNOT BE MAINTAINED AFTER 10 MINUTES, THE SECOND VALVE MODULATES OPEN. IF THE SUPPLY GLYCOL TEMPERATURE RISES 3°F BEYOND THE SETPOINT, THE STEAM CONTROL VALVES MODULATE IN REVERSE SEQUENCE. THE PUMPS SHALL BE SCHEDULED BY THE BAS (BUILDING AUTOMATION SYSTEM) IN A LEAD/LAG CONFIGURATION TO ROTATE OPERATION OF THE PUMPS EVERY 7 DAYS. THE BAS INCORPORATES A SUMMER SHUTDOWN SCHEDULE DURING JUNE, JULY, AND AUGUST, WHERE NO HEATING IS ALLOWED.

SEQUENCE OF OPERATION FOR THE RADIANT FLOOR SYSTEM

UPON CALL FOR HEATING FROM THE RADIANT FLOOR CONTROL SYSTEM, THE PUMP SHALL START. THE STEAM CONTROL VALVES SHALL MODULATE STEAM FLOW TO THE HEAT EXCHANGER TO MAINTAIN THE GLYCOL SUPPLY TEMPERATURE AT 114°F. THE SMALLER STEAM CONTROL VALVE MODULATES OPEN FIRST. IF THE SMALLER VALVE IS FULLY OPEN AND THE SUPPLY GLYCOL TEMPERATURE SETPOINT CANNOT BE MAINTAINED AFTER 10 MINUTES, THE SECOND VALVE MODULATES OPEN. IF THE SUPPLY GLYCOL TEMPERATURE RISES 3°F BEYOND THE SETPOINT, THE STEAM CONTROL VALVES MODULATE IN REVERSE SEQUENCE. THE BAS INCORPORATES A SUMMER SHUTDOWN SCHEDULE DURING JUNE, JULY, AND AUGUST, WHERE NO HEATING IS ALLOWED.

RADIANT FLOOR: ZONE THERMOSTATS CONTROL TWO-WAY VALVES SERVING THE RADIANT FLOOR MANIFOLDS, EXCEPT ZONE 10 USES A 3-WAY VALVE TO BYPASS THE MANIFOLD WHEN THERE IS NO CALL FOR HEATING. PUMPS P-3 & P-4 ARE ALTERNATED BY THE BAS IN A WEEKLY LEAD/LAG SEQUENCE.

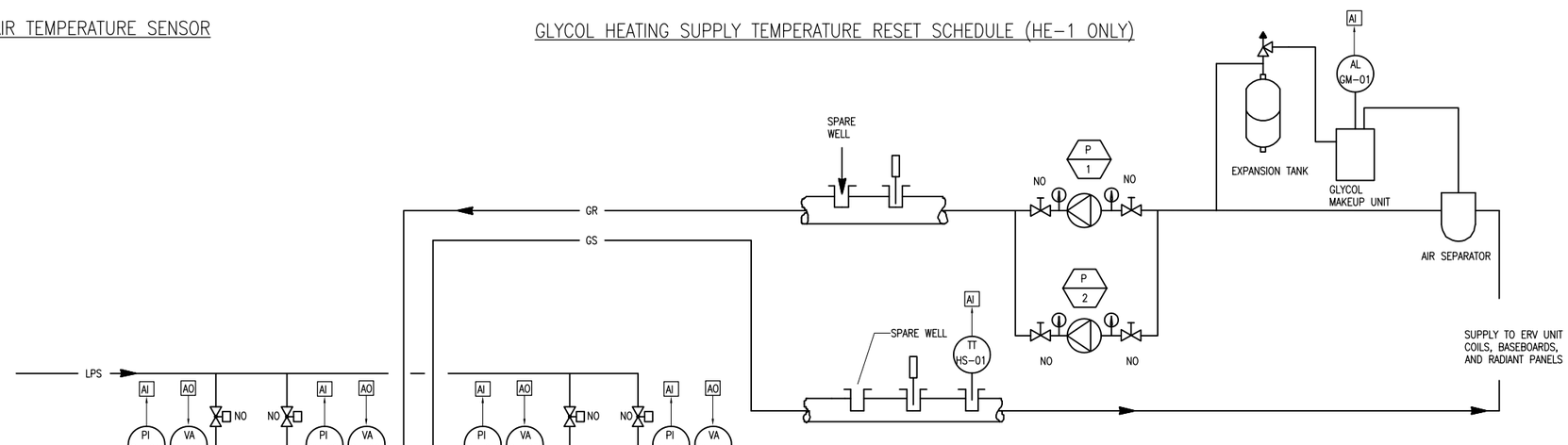

STEAM SYSTEM

ERV-1 THRU 3 HEATING COIL SYSTEM

RADIANT FLOOR SYSTEM

GENERAL NOTES:
1. NOT ALL OF THE HYDRONIC AND STEAM FITTINGS AND DEVICES ARE SHOWN ON THE CONTROL SCHEMATIC

NOT FOR CONSTRUCTION
BACKCHECK

US ARMY CORPS OF ENGINEERS
ALASKA DISTRICT

CONTRACT NO. ___
CONTRACTOR ___
CITY ___ STATE ___
PRIME CONTRACTOR Recommended: ___
RESIDENT ENGINEER Approved: ___ Date: ___

Symb	Action	Description	Date	Appvd

U.S. ARMY ENGINEER DISTRICT
CORPS OF ENGINEERS
ANCHORAGE, ALASKA

Designed: BFC
Drawn: BFC
Reviewed: C. VONGUNTEN
Chief — Section
Submitted: D. FREMER
Chief — Branch
Date: 16 JULY 2009
Dwg Scale: AS NOTED
Plot Scale: 1:2
File: FTW336A-091-M4-02
Drawing #: F-211-13-01

INV. NO. W911KB-09-R-0007
PN 65076
FTW336A

FT. WAINWRIGHT, ALASKA
AIRCRAFT PARTS STORAGE
MECHANICAL
CONTROLS
BUILDING HEAT PLANT CONTROL DIAGRAM

Reference number:
M4.02
Sheet 91 of 118

Drawing x:\UNIFIED\EN-TE\Jobs\FTW336A\Dwgs\FTW336A-091-M4-02.dwg last saved on 5/6/2009 10:34 AM was plotted by Curfew, Donald L POA on 7/17/2009 6:54 AM

| | I/O MATRIX | | |

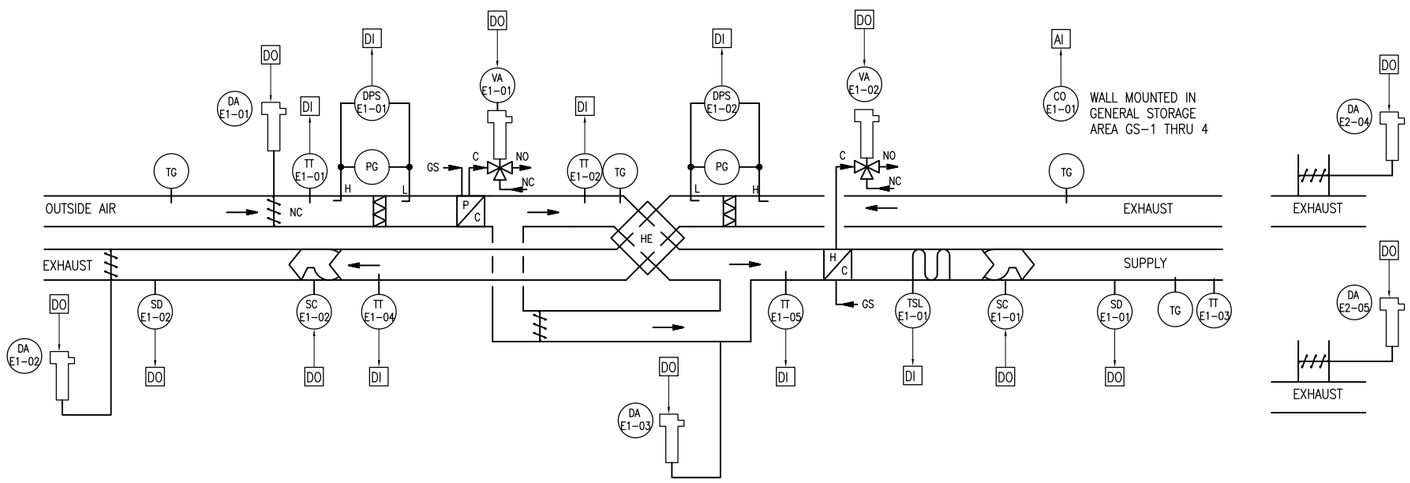

ERV-1 CONTROL DIAGRAM (GENERAL STORAGE AREA)

NTS

I/O MATRIX																							SOFTWARE					
	OUTPUT										INPUT												APPLICATION PROGRAMS					
	DIGITAL			ANALOG							DIGITAL			ANALOG														
	START/STOP	FAN MOTOR SPEED (RPM)			POSITION ADJUSTMENT						ALARM	CARBON MONOXIDE (PPM)			TEMPERATURE	POSITION INDICATION	ALARM	CURRENT					TIME SCHEDULE	TRENDING	RUNTIME ERRORS	ALARM REPORTING	SETPOINT ADJUSTMENT	GRAPHIC
SUPPLY FAN	1	1																					X	X				X
EXHAUST FAN	1	1																					X	X		X		X
SUPPLY AIR															1												X	X
RETURN AIR															1			1										X
EXHAUST AIR															1													X
OUTSIDE AIR															1													X
OUTSIDE AIR DAMPER					1											1												X
EXHAUST AIR DAMPER					1											1												X
BYPASS AIR DAMPER					1											1												X
PREHEAT COIL VALVES					1											1							X	X				X
HEATING COIL VALVES					1											1							X	X				X
DUCT SMOKE DETECTOR											2															X		X
THERMOSTAT															1									X			X	X
FILTERS											2															X	X	X
FREEZESTAT											1													X		X	X	X
CO DETECTORS											1	4												X		X	X	X
CURRENT SENSOR																		1						X			X	X

CONTROL DAMPER SCHEDULE					
IDENTIFIER	FUNCTION	TYPE	SIZE	RANGE	REMARKS
DA-E1-01	OUTSIDE AIR DAMPER	OPEN/CLOSED	LOUVER DIMENSION	0-4 IN WG/-60°F TO 90°F	PARALLEL BLADE, COLD TEMPERATURE
DA-E1-02	EXHAUST AIR DAMPER	OPEN/CLOSED	LOUVER DIMENSION	0-4 IN WG/-60°F TO 90°F	PARALLEL BLADE, COLD TEMPERATURE
DA-E1-03	HEAT EXCHANGER BYPASS AIR DAMPER	OPEN/CLOSED	MANUFACTURERS STANDARD	0-4 IN WG/0°F TO 100°F	PARALLEL BLADE
DA-E1-04	BATTERY CHARGING OPERATION - AIR DEVICE EG-4	OPEN/CLOSED	DUCT SIZE	0-4 IN WG/0°F TO 100°F	PARALLEL BLADE
DA-E1-05	BATTERY CHARGING OPERATION - AIR DEVICE EG-7	OPEN/CLOSED	DUCT SIZE	0-4 IN WG/0°F TO 100°F	PARALLEL BLADE

CONTROL VALVE SCHEDULE						
IDENTIFIER	FUNCTION	TYPE	RANGE	CV	CLOSE OFF RATING	REMARKS
VA-E1-01	PRE-HEAT COIL VALVE	3-WAY, MODULATING	MANUFACTURERS STANDARD	16	70 PSIG	GLOBE VALVE, 24V ACTUATOR
VA-E1-02	VALVE ACTUATOR, HEATING COIL	3-WAY, MODULATING	MANUFACTURERS STANDARD	6.3	70 PSIG	GLOBE VALVE, 24V ACTUATOR

SENSOR SCHEDULE		
IDENTIFIER	FUNCTION	RANGE/SETPOINT
CO-E1-01	CARBON MONOXIDE SENSOR, WALL MOUNTED	0-100 PPM/25 PPM
DPS-E1-01	DIFFERENTIAL PRESSURE SENSOR, OUTSIDE AIR FILTER	0-1.0 IN WG/.65 IN WG
DPS-E1-02	DIFFERENTIAL PRESSURE SENSOR, EXHAUST AIR FILTER	0-1.0 IN WG/.65 IN WG
SD-E1-01	DUCT SMOKE DETECTOR, SUPPLY DUCT	ON/OFF
SD-E1-02	DUCT SMOKE DETECTOR, EXHAUST DUCT	ON/OFF
TSL-E1-01	TEMPERATURE SENSOR, LOW TEMPERATURE PROTECTION	0°F - 80°F/40°F
TT-E1-01	TEMPERATURE TRANSMITTER, DUCT MOUNTED, OUTSIDE AIR	-60°F TO 100°F
TT-E1-02	TEMPERATURE TRANSMITTER, UNIT MOUNTED, OUTSIDE AIR LEAVING PRE-HEAT COIL	-60°F - 100°F/20°F
TT-E1-03	TEMPERATURE TRANSMITTER, UNIT MOUNTED, OUTSIDE AIR LEAVING ERV	40°F - 100°F/68°F/55°F UNOCCUPIED SETBACK
TT-E1-04	TEMPERATURE TRANSMITTER, UNIT MOUNTED, EXHAUST LEAVING HEAT EXCHANGER	40°F - 100°F
TT-E1-05	TEMPERATURE TRANSMITTER, UNIT MOUNTED, OUTSIDE AIR LEAVING HEAT EXCHANGER	40°F - 100°F
SC-E1-01	FAN MOTOR SPEED CONTROL, SUPPLY AIR	OFF-LOW-HIGH
SC-E1-02	FAN MOTOR SPEED CONTROL, EXHAUST AIR	OFF-LOW-HIGH

SEQUENCE OF OPERATION

SCHEDULE: OPERATES BASED ON USER VARIABLE OCCUPANCY SCHEDULE, MONDAY - SATURDAY 7AM TO 7PM, SCHEDULE ON/OFF IS OVERRIDDEN BY CO LEVEL, BATTERY CHARGING MODES, OR USER INPUT.

MODES OF OPERATION

- CO LEVEL CONTROL: GAS SENSORS GS-1 THRU 4 MONITOR THE CARBON MONOXIDE LEVELS IN THE GENERAL STORAGE AREA. WHEN THE CO LEVEL EXCEEDS SETPOINT SHOWN, ERV-1 SUPPLY AND EXHAUST FAN MOTOR SPEEDS ARE SET TO HIGH. WHEN THE CO LEVEL DROPS BELOW SETPOINT SHOWN, THE FAN MOTORS ARE SET TO LOW SPEED AFTER A 10 MINUTE DELAY.

- BATTERY CHARGING: THE BATTERY CHARGERS ARE MONITORED BY CURRENT SENSORS, CURRENT FLOW TO EITHER BATTERY CHARGER INITIATES HIGH MOTOR SPEED FOR THE SUPPLY AND EXHAUST FANS. THE MOTORIZED DAMPERS AT EG-4 & 7 OPEN. WHEN NEITHER OF THE BATTERY CHARGER CURRENT SENSORS DETECT CURRENT FLOW, EG-4 & 7 DAMPERS CLOSE AND THE FAN SPEEDS ARE SET TO LOW AFTER A 10 MINUTE DELAY.

- GENERAL VENTILATION CONTROL: IF THE CARBON MONOXIDE LEVEL IS BELOW THE SETPOINT AND THE BATTERY CHARGERS ARE NOT CHARGING, ERV-1 SUPPLY AND EXHAUST FAN MOTOR SPEEDS ARE SET TO LOW. IN ALL MODES OF OPERATION, THE AIR VOLUME IS MODULATED THROUGH THE USE OF SPEED CONTROLS ON BOTH SUPPLY AND EXHAUST FAN MOTORS. HIGH SPEED IS THE MOTOR NAMEPLATE RPM, LOW SPEED IS 1/2 OF HIGH SPEED RPM.

OUTSIDE AND EXHAUST AIR DAMPERS
- SET TO FULLY OPEN WHEN FANS ARE ON.

BYPASS DAMPER
- FULLY OPEN WHEN THE OUTDOOR AIR TEMPERATURE >60°F

SUPPLY AND EXHAUST FAN CONTROL
- BOTH FANS RUN SIMULTANEOUSLY WHEN UNIT IS ON. VARIABLE FREQUENCY DRIVES MOUDLATE FAN SPEED.

FILTERS
- A DIFFERENTIAL PRESSURE SENSOR ACROSS THE FILTERS SHALL INTIATE A FILTER ALARM WHEN THE PRESSURE DROP ACROSS THE FILTER REACHES THE SEPOINT AS SHOWN. THE ALARM SHALL DISPLAY AT THE BUILDING AUTOMATION SYSTEM TERMINAL.

FREEZE PROTECTION
- A TEMPERATURE SENSOR (LOW TEMPERATURE) SHALL STOP THE SUPPLY FAN, AND CAUSE THE OUTSIDE AND EXHAUST AIR DAMPERS TO CLOSE, AND SHALL INITATE A LOW TEMPERATURE ALARM IF THE TEMPERATURE DROPS BELOW THE SETPOINT SHOWN. RETURN TO THE NORMAL MODE OF OPERATION SHALL REQUIRE MANUAL RESET OF THE SENSOR. THE ALARM SHALL ANNUNCIATE AT THE BUILDING AUTOMATION SYSTEM TERMINAL.

PREHEAT COIL
- THE CONTROL VALVE SHALL BE MODULATED BY THE DDC SYSTEM FROM THE SIGNAL OF A TEMPERATURE SENSING ELEMENT AND TRANSMITTER LOCATED IN THE COIL DISCHARGE AIR TO MAINTAIN THE SETPOINT SHOWN.

HEATING COIL
- THE CONTROL VALVE SHALL BE MODULATED BY THE DDC SYSTEM FROM THE SIGNAL OF A TEMPERATURE SENSING ELEMENT AND TRANSMITTER LOCATED IN THE SUPPLY AIR DUCT TO MAINTAIN THE SETPOINT SHOWN.

EMERGENCY HVAC SHUTOFF
- THE BUILDING AUTOMATION SYSTEM (BAS) SHALL SHUTOFF ERV-1 THRU 4 AND CLOSE OUTSIDE AIR AND EXHAUST AIR DAMPERS WHEN THE EMERGENCY HVAC SHUTOFF SIGNAL IS RECEIVED.

NOT FOR CONSTRUCTION

BACKCHECK

US ARMY CORPS OF ENGINEERS
ALASKA DISTRICT

CONTRACT NO. ___
CONTRACTOR ___
CITY ___ STATE ___
PRIME CONTRACTOR ___
Recommended: ___
RESIDENT ENGINEER ___
Approved: ___
Date: ___

Symb	Action	Description	Date	Appvd

U.S. ARMY ENGINEER DISTRICT
CORPS OF ENGINEERS
ANCHORAGE, ALASKA

Designed: BFC
Drawn: BFC
Reviewed: C. VONGUNTEN
Chief: ---
Submitted: D. FREIMER
Date: 16 JULY 2009
Dwg Scale: AS NOTED
Plot Scale: 1:2
File: FTW336A-093-M4-04
Drawing No: F-211-13-01
INV. NO. W911KB-09-R-0007
PN 65076
FTW336A

FT. WAINWRIGHT, ALASKA
AIRCRAFT PARTS STORAGE
MECHANICAL
CONTROLS
ERV-1 CONTROL DIAGRAM AND MATRIX

Reference number:
M4.04
Sheet 93 of 118

Drawing x:\UNIFIED\EN-TE\Jobs\FTW336A\Dwgs\FTW336A-093-M4-04.dwg last saved on 6/25/2009 4:56 PM was plotted by Curfew, Donald L POA on 7/17/2009 6:55 AM

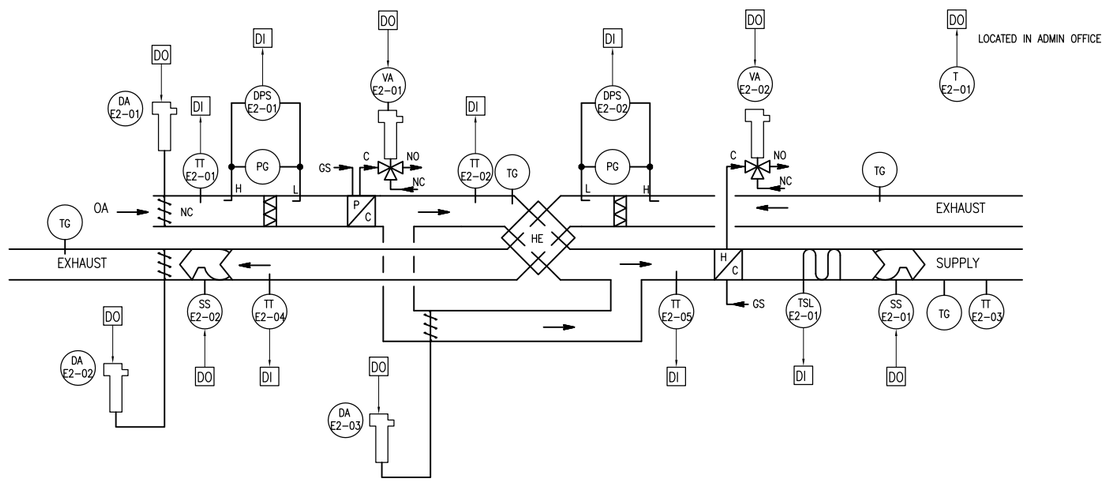

ERV-2 CONTROL DIAGRAM (ADMIN AREA)

NTS

CONTROL DAMPER SCHEDULE					
IDENTIFIER	FUNCTION	TYPE	SIZE	RANGE	REMARKS
DA-E2-01	OUTSIDE AIR DAMPER	OPEN/CLOSED	LOUVER DIMENSION	0-4 IN WG/-60°F TO 90°F	PARALLEL BLADE, COLD TEMPERATURE
DA-E2-02	EXHAUST AIR DAMPER	OPEN/CLOSED	LOUVER DIMENSION	0-4 IN WG/-60°F TO 90°F	PARALLEL BLADE, COLD TEMPERATURE
DA-E2-03	HEAT EXCHANGER BYPASS AIR DAMPER	OPEN/CLOSED	MANUFACTURERS STANDARD	0-4 IN WG/0°F TO 100°F	PARALLEL BLADE

CONTROL VALVE SCHEDULE						
IDENTIFIER	FUNCTION	TYPE	RANGE	CV	CLOSE OFF RATING	REMARKS
VA-E2-01	VALVE ACTUATOR, PRE-HEAT COIL VALVE	3-WAY, MODULATING	MANUFACTURERS STANDARD	4	70 PSIG	GLOBE VALVE, 24V ACTUATOR
VA-E2-02	VALVE ACTUATOR, HEATING COIL	3-WAY, MODULATING	MANUFACTURERS STANDARD	4	70 PSIG	GLOBE VALVE, 24V ACTUATOR

SENSOR SCHEDULE		
IDENTIFIER	FUNCTION	RANGE/SETPOINT
DPS-E2-01	DIFFERENTIAL PRESSURE SENSOR, OUTSIDE AIR FILTER	0-1.0 IN WG/.65 IN WG
DPS-E2-02	DIFFERENTIAL PRESSURE SENSOR, EXHAUST AIR FILTER	0-1.0 IN WG/.65 IN WG
SS-E2-01	START/STOP MOTOR, SUPPLY AIR	ON/OFF
SS-E2-02	START/STOP MOTOR, EXHAUST AIR	ON/OFF
T-E2-01	TEMPERATURE SENSOR/USER INPUT DEVICE TO BAS (TO REVISE TT-E2-03)	ON/OFF
TSL-E2-01	TEMPERATURE SENSOR, LOW TEMPERATURE PROTECTION	0°F - 80°F/40°F
TT-E2-01	TEMPERATURE TRANSMITTER, DUCT MOUNTED, OUTSIDE AIR	-60°F - 100°F
TT-E2-02	TEMPERATURE TRANSMITTER, UNIT MOUNTED, OUTSIDE AIR LEAVING PRE-HEAT COIL	-60°F - 100°F/20°F
TT-E2-03	TEMPERATURE TRANSMITTER, UNIT MOUNTED, SUPPLY AIR LEAVING ERV-2	40°F - 100°F/68°F
TT-E2-04	TEMPERATURE TRANSMITTER, UNIT MOUNTED, EXHAUST LEAVING HEAT EXCHANGER	40°F - 100°F
TT-E2-05	TEMPERATURE TRANSMITTER, UNIT MOUNTED, OUTSIDE AIR LEAVING HEAT EXCHANGER	40°F - 100°F

	I/O MATRIX																		SOFTWARE					
	OUTPUT								INPUT										APPLICATION PROGRAMS					
	DIGITAL				ANALOG				DIGITAL				ANALOG											
	START/STOP				POSITION ADJUSTMENT				ALARM				TEMPERATURE	POSITION INDICATION		ALARM			TIME SCHEDULE	TRENDING	RUNTIME ERRORS	ALARM REPORTING	SETPOINT ADJUSTMENT	GRAPHIC
SUPPLY FAN	1																		X	X				X
EXHAUST FAN	1																		X	X				X
SUPPLY AIR													1											X
RETURN AIR													1											X
EXHAUST AIR													1											X
OUTSIDE AIR													1											X
OUTSIDE AIR DAMPER					1									1										X
EXHAUST AIR DAMPER					1									1										X
BYPASS AIR DAMPER					1									1										X
PREHEAT COIL VALVES					1									1						X				X
HEATING COIL VALVES					1									1						X				X
THERMOSTAT													1									X	X	X
FILTERS									2											X		X	X	X
FREEZESTAT									1													X	X	X

SEQUENCE OF OPERATION

SCHEDULE
- OPERATES BASED ON OCCUPANCY SCHEDULE, MONDAY - SATURDAY 7AM TO 7PM, ADJUSTABLE BY THE USER INTERFACE (T-E2-01).

MODES OF OPERATION
GENERAL HEATING AND VENTILATION: BOTH FANS OPERATE TO PROVIDE GENERAL VENTILATION.

OUTSIDE AND EXHAUST AIR DAMPERS
- SET TO FULLY OPEN WHEN FANS ARE ON.

BYPASS DAMPER
- FULLY OPEN WHEN THE OUTDOOR AIR TEMPERATURE >60°F

SUPPLY AND EXHAUST FAN CONTROL
- BOTH FANS RUN SIMULTANEOUSLY WHEN UNIT IS ON.

FILTERS
- A DIFFERENTIAL PRESSURE SENSOR ACROSS THE FILTERS SHALL INTIATE A FILTER ALARM WHEN THE PRESSURE DROP ACROSS THE FILTER REACHES THE SEPOINT AS SHOWN. THE ALARM SHALL DISPLAY AT THE BUILDING AUTOMATION SYSTEM TERMINAL.

FREEZE PROTECTION
- A TEMPERATURE SENSOR (LOW TEMPERATURE) SHALL STOP THE SUPPLY FAN, AND CAUSE THE OUTSIDE AND EXHAUST AIR DAMPERS TO CLOSE, AND SHALL INITATE A LOW TEMPERATURE ALARM IF THE TEMPERATURE DROPS BELOW THE SETPOINT SHOWN. RETURN TO THE NORMAL MODE OF OPERATION SHALL REQUIRE MANUAL RESET OF THE SENSOR. THE ALARM SHALL ANNUNCIATE AT THE BUILDING AUTOMATION SYSTEM TERMINAL.

PREHEAT COIL
- THE CONTROL VALVE SHALL BE MODULATED BY THE DDC SYSTEM FROM THE SIGNAL OF A TEMPERATURE SENSING ELEMENT AND TRANSMITTER LOCATED IN THE COIL DISCHARGE AIR TO MAINTAIN THE SETPOINT SHOWN.

HEATING COIL
- THE CONTROL VALVE SHALL BE MODULATED BY THE DDC SYSTEM FROM THE SIGNAL OF TEMPERATURE SENSING ELEMENT LOCATED IN THE SUPPLY DUCT (TT-E2-03) TO MAINTAIN THE SETPOINT SHOWN.

EMERGENCY HVAC SHUTOFF
- THE BUILDING AUTOMATION SYSTEM (BAS) SHALL SHUTOFF ERV-1 THRU 3 AND CLOSE THE OUTSIDE AND EXHAUST AIR DAMPERS WHEN THE EMERGENCY HVAC SHUTOFF SIGNAL IS RECEIVED.

NOT FOR CONSTRUCTION
BACKCHECK

US ARMY CORPS OF ENGINEERS
ALASKA DISTRICT

CONTRACT NO. ___
CONTRACTOR ___
CITY ___ STATE ___
PRIME CONTRACTOR ___ Recommended: ___
RESIDENT ENGINEER ___ Approved: ___ Date: ___

Sym	Action	Description	Date	Appvd

U.S. ARMY ENGINEER DISTRICT
CORPS OF ENGINEERS
ANCHORAGE, ALASKA

Designed: BFC
Drawn: BFC
Reviewed: C. VONGUNTEN
Chief: ___ Section
Submitted: D. FREIMER
Date: 16 JULY 2009
Dwg Scale: AS NOTED
Plot Scale: 1:2
File: FTW336A-094-M4-05
Drawing #: F-211-13-01

INV. NO. W911KB-09-R-0007
PN 65076
FTW336A

FT. WAINWRIGHT, ALASKA
AIRCRAFT PARTS STORAGE
MECHANICAL
CONTROLS
ERV-2 CONTROL DIAGRAM AND MATRIX

Reference number:
M4.05

Drawing x:\UNIFIED\EN-TE\Jobs\FTW336A\Dwgs\FTW336A-094-M4-05.dwg last saved on 4/2/2009 3:13 PM was plotted by Curfew, Donald L POA on 7/17/2009 6:55 AM

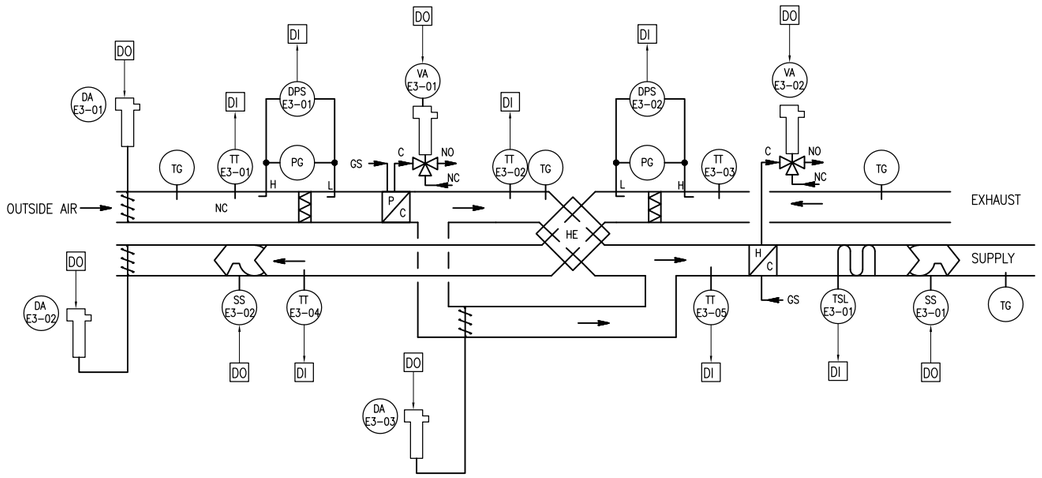

ERV-3 MECHANICAL AND FIRE PUMP ROOM

NTS

I/O MATRIX																		SOFTWARE					
	OUTPUT						INPUT									APPLICATION PROGRAMS							
	DIGITAL			ANALOG			DIGITAL			ANALOG													
	START/STOP			POSITION ADJUSTMENT			ALARM			TEMPERATURE	POSITION INDICATION	ALARM				TIME SCHEDULE	TRENDING	RUNTIME ERRORS	ALARM REPORTING	SETPOINT ADJUSTMENT	GRAPHIC
SUPPLY FAN	1															X	X				X
EXHAUST FAN	1															X	X				X
SUPPLY AIR											1										X
RETURN AIR											1										X
EXHAUST AIR											1										X
OUTSIDE AIR											1										X
OUTSIDE AIR DAMPER				1								1									X
EXHAUST AIR DAMPER				1								1									X
BYPASS AIR DAMPER				1								1									X
PREHEAT COIL VALVES				1								1					X				X
HEATING COIL VALVES				1								1					X				X
THERMOSTAT											1								X	X	X
FILTERS							2										X		X	X	X
FREEZESTAT							1												X	X	X

CONTROL DAMPER SCHEDULE					
IDENTIFIER	FUNCTION	TYPE	SIZE	RANGE	REMARKS
DA-E3-01	OUTSIDE AIR DAMPER	OPEN/CLOSED	LOUVER DIMENSION	0-4 IN WG/-60°F TO 90°F	PARALLEL BLADE, COLD TEMPERATURE
DA-E3-02	EXHAUST AIR DAMPER	OPEN/CLOSED	LOUVER DIMENSION	0-4 IN WG/-60°F TO 90°F	PARALLEL BLADE, COLD TEMPERATURE
DA-E3-03	HEAT EXCHANGER BYPASS AIR DAMPER	OPEN/CLOSED	MANUFACTURERS STANDARD	0-4 IN WG/0°F TO 100°F	PARALLEL BLADE

CONTROL VALVE SCHEDULE						
IDENTIFIER	FUNCTION	TYPE	RANGE	CV	CLOSE OFF RATING	REMARKS
VA-E3-01	VALVE ACTUATOR, PRE-HEAT COIL VALVE	3-WAY, MODULATING	MANUFACTURERS STANDARD	4	70 PSIG	GLOBE VALVE, 24V ACTUATOR
VA-E3-02	VALVE ACTUATOR, HEATING COIL	3-WAY, MODULATING	MANUFACTURERS STANDARD	4	70 PSIG	GLOBE VALVE, 24V ACTUATOR

SENSOR SCHEDULE		
IDENTIFIER	FUNCTION	RANGE/SETPOINT
DPS-E3-01	DIFFERENTIAL PRESSURE SENSOR, OUTSIDE AIR FILTER	0-1.0 IN WG/.65 IN WG
DPS-E3-02	DIFFERENTIAL PRESSURE SENSOR, EXHAUST AIR FILTER	0-1.0 IN WG/.65 IN WG
SS-E3-01	START/STOP MOTOR, SUPPLY AIR FAN	ON/OFF
SS-E3-02	START/STOP MOTOR, EXHAUST AIR FAN	ON/OFF
T-E3-01	TEMPERATURE SENSOR/USER INPUT DEVICE TO BAS (TO REVISE TT-E3-03 SETPOINT)	40°F - 80°F
TSL-E3-01	TEMPERATURE SENSOR, LOW TEMPERATURE PROTECTION	0°F - 80°F/40°F
TT-E3-01	TEMPERATURE TRANSMITTER, DUCT MOUNTED, OUTSIDE AIR	-60°F TO 100°F
TT-E3-02	TEMPERATURE TRANSMITTER, UNIT MOUNTED, OUTSIDE AIR LEAVING PRE-HEAT COIL	40°F - 100°F/20°F
TT-E3-03	TEMPERATURE TRANSMITTER, UNIT MOUNTED, EXHAUST AIR LEAVING OFFICES/RESTROOMS	40°F - 100°F/55°F
TT-E3-04	TEMPERATURE TRANSMITTER, UNIT MOUNTED, EXHAUST AIR LEAVING HEAT EXCHANGER	40°F - 100°F
TT-E3-05	TEMPERATURE TRANSMITTER, UNIT MOUNTED, OUTSIDE AIR LEAVING HEAT EXCHANGER	40°F - 100°F

SEQUENCE OF OPERATION

SCHEDULE
- OPERATES CONTINUOUSLY

MODES OF OPERATION
- GENERAL VENTILATION: BOTH FANS OPERATE TO PROVIDE GENERAL VENTILATION AND HEATING.

OUTSIDE AND EXHAUST AIR DAMPERS
- SET TO FULLY OPEN WHEN FANS ARE ON.

BYPASS DAMPER
- FULLY OPEN WHEN THE OUTDOOR AIR TEMPERATURE >60°F

SUPPLY AND EXHAUST FAN CONTROL
- BOTH FANS RUN SIMULTANEOUSLY WHEN UNIT IS ON.

FILTERS
- A DIFFERENTIAL PRESSURE SENSOR ACROSS THE FILTERS SHALL INTIATE A FILTER ALARM WHEN THE PRESSURE DROP ACROSS THE FILTER REACHES THE SEPOINT AS SHOWN. THE ALARM SHALL DISPLAY AT THE BUILDING AUTOMATION SYSTEM TERMINAL.

FREEZE PROTECTION
- A TEMPERATURE SENSOR (LOW TEMPERATURE) SHALL STOP THE SUPPLY FAN, AND CAUSE THE OUTSIDE AND EXHAUST AIR DAMPERS TO CLOSE, AND SHALL INITATE A LOW TEMPERATURE ALARM IF THE TEMPERATURE DROPS BELOW THE SETPOINT SHOWN. RETURN TO THE NORMAL MODE OF OPERATION SHALL REQUIRE MANUAL RESET OF THE SENSOR. THE ALARM SHALL ANNUNCIATE AT THE BUILDING AUTOMATION SYSTEM TERMINAL.

PREHEAT COIL
- THE CONTROL VALVE SHALL BE MODULATED BY THE DDC SYSTEM FROM THE SIGNAL OF A TEMPERATURE SENSING ELEMENT AND TRANSMITTER LOCATED IN THE COIL DISCHARGE AIR TO MAINTAIN THE SETPOINT SHOWN.

HEATING COIL
- THE CONTROL VALVE SHALL BE MODULATED BY THE DDC SYSTEM FROM THE SIGNAL OF A TEMPERATURE SENSING ELEMENT LOCATED IN THE EXHAUST AIR DUCT (TT-E3-03) TO MAINTAIN THE SETPOINT SHOWN.

EMERGENCY HVAC SHUTOFF
- THE BUILDING AUTOMATION SYSTEM (BAS) SHALL SHUTOFF ERV-1 THRU 3 AND CLOSE THE OUTSIDE AND EXHAUST AIR DAMPERS WHEN THE EMERGENCY HVAC SHUTOFF SIGNAL IS RECEIVED.

NOT FOR CONSTRUCTION
BACKCHECK

US ARMY CORPS OF ENGINEERS
ALASKA DISTRICT

CONTRACT NO. _____
CONTRACTOR _____
CITY _____ STATE _____
PRIME CONTRACTOR — Recommended: _____
RESIDENT ENGINEER — Approved: _____ Date: _____

Sym	Action	Description	Date	Appvd

U.S. ARMY ENGINEER DISTRICT
CORPS OF ENGINEERS
ANCHORAGE, ALASKA

Designed: BFC
Drawn: BFC
Reviewed: C. VONGUNTEN
Chief — Section
Submitted: D. FRENER
Chief — Branch
Date: 16 JULY 2009
Dwg Scale: AS NOTED
Plot Scale: 1:2
File: FTW336A-095-M4-06
Drawing #: F-211-13-01

INV. NO. W911KB-09-R-0007
PN 65076
FTW336A

FT. WAINWRIGHT, ALASKA
AIRCRAFT PARTS STORAGE
MECHANICAL
CONTROLS
ERV-3 CONTROL DIAGRAM AND MATRIX

Reference number:
M4.06

Drawing x:\UNIFIED\EN-TE\Jobs\FTW336A\Dwgs\FTW336A-095-M4-06.dwg last saved on 5/6/2009 11:15 AM was plotted by Curfew, Donald L POA on 7/17/2009 6:55 AM

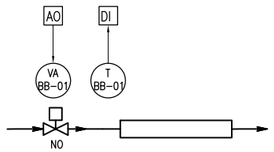

BASEBOARD HEATER CONTROL

SEQUENCE OF OPERATION

HEATING MODE – THE HYDRONIC VALVE IS CONTROLLED ON/OFF BY THE ROOM THERMOSTAT. THE VALVE FAILS OPEN.

	I/O MATRIX												SOFTWARE			
	OUTPUT						INPUT						APPLICATION PROGRAMS			
	DIGITAL			ANALOG			DIGITAL			ANALOG						
				POSITION ADJUSTMENT			TEMPERATURE						TIME SCHEDULE	TRENDING	SETPOINT ADJUSTMENT	GRAPHIC
HEATING VALVES				12												X
THERMOSTAT							12							X	X	X

CONTROL VALVE SCHEDULE	
IDENTIFIER	VA-BB-01 THRU 12
FUNCTION	BASEBOARD, HEATING COIL VALVE
TYPE	2-WAY, ON/OFF
RANGE	MANUFACTURERS STANDARD
CV	2.5
CLOSE OFF RATING	50 PSIG
REMARKS	GLOBE VALVE, 24V ACTUATOR

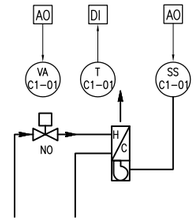

CABINET UNIT HEATER CONTROL

SEQUENCE OF OPERATION

AUTOMATIC – THE BLOWER AND HYDRONIC HEATING COIL VALVE ARE CONTROLLED ON/OFF BY THE ROOM THERMOSTAT. THE VALVE FAILS OPEN, THE FAN FAILS OFF.

MANUAL – A HAND/OFF/AUTO SWITCH OPERATES BOTH THE BLOWER AND HYDRONIC HEATING CONTROL VALVE IN MANUAL MODE.

NOTE: CUH-2 THRU CUH-4 CONTROLS ARE THE SAME EXCEPT FOR THE IDENTIFIERS.

	I/O MATRIX												SOFTWARE			
	OUTPUT						INPUT						APPLICATION PROGRAMS			
	DIGITAL			ANALOG			DIGITAL			ANALOG						
	START/STOP			POSITION ADJUSTMENT			TEMPERATURE						TIME SCHEDULE	TRENDING	SETPOINT ADJUSTMENT	GRAPHIC
SUPPLY FAN	4															X
HEATING VALVES				4												X
THERMOSTAT							4							X	X	X

CONTROL VALVE SCHEDULE	
IDENTIFIER	VA-C1-01 THRU 04
FUNCTION	CUH HEATING COIL VALVE
TYPE	2-WAY, ON/OFF
RANGE	MANUFACTURERS STANDARD
CV	2.5
CLOSE OFF RATING	50 PSIG
REMARKS	GLOBE VALVE, 24V ACTUATOR

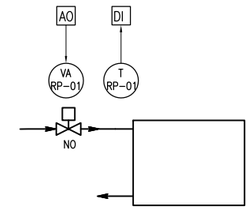

RADIANT PANEL CONTROL

SEQUENCE OF OPERATION

HEATING MODE – THE HYDRONIC VALVE IS CONTROLLED ON/OFF BY THE ROOM THERMOSTAT. THE VALVE FAILS OPEN.

	I/O MATRIX												SOFTWARE			
	OUTPUT						INPUT						APPLICATION PROGRAMS			
	DIGITAL			ANALOG			DIGITAL			ANALOG						
				POSITION ADJUSTMENT			TEMPERATURE						TIME SCHEDULE	TRENDING	SETPOINT ADJUSTMENT	GRAPHIC
HEATING VALVES				15												X
THERMOSTAT							15							X	X	X

CONTROL VALVE SCHEDULE	
IDENTIFIER	VA-BB-01 THRU 12
FUNCTION	BASEBOARD, HEATING COIL VALVE
TYPE	2-WAY, ON/OFF
RANGE	MANUFACTURERS STANDARD
CV	2.5
CLOSE OFF RATING	50 PSIG
REMARKS	GLOBE VALVE, 24V ACTUATOR

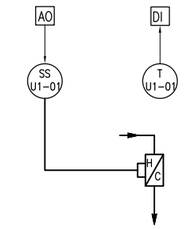

UNIT HEATER CONTROL

SEQUENCE OF OPERATION

AUTOMATIC – THE BLOWER IS CONTROLLED ON/OFF BY THE ROOM THERMOSTAT. THE FAN FAILS OFF.

MANUAL – A HAND/OFF/AUTO SWITCH OPERATES THE BLOWER IN MANUAL MODE.

NOTE: NO CONTROL VALVE

	I/O MATRIX												SOFTWARE			
	OUTPUT						INPUT						APPLICATION PROGRAMS			
	DIGITAL			ANALOG			DIGITAL			ANALOG						
				START/STOP			TEMPERATURE						TIME SCHEDULE	TRENDING	SETPOINT ADJ.	GRAPHIC
SUPPLY FAN				1												X
THERMOSTAT							1							X	X	X

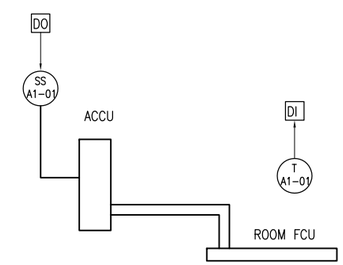

AIR CONDITIONER CONTROL

SEQUENCE OF OPERATION

AUTOMATIC – THE COMPRESSOR, EVAPORATOR FAN, AND CONDENSER FANS ARE CONTROLLED ON/OFF BY THE INTEGRAL CONTROLLER BASED VIA THE ROOM THERMOSTAT. THE ROOM SETPOINT FOR COOLING IS 75F.

	I/O MATRIX												SOFTWARE			
	OUTPUT						INPUT						APPLICATION PROGRAMS			
	DIGITAL			ANALOG			DIGITAL			ANALOG						
	START/STOP						TEMPERATURE						TIME SCHEDULE	TRENDING	SETPOINT ADJ.	GRAPHIC
AIR COOLED CONDENSING UNIT	1															X
THERMOSTAT							1							X	X	X

NOT FOR CONSTRUCTION

BACKCHECK

US ARMY CORPS OF ENGINEERS
ALASKA DISTRICT

CONTRACT NO. ____
CONTRACTOR ____
CITY ____ STATE ____
PRIME CONTRACTOR ____ Recommended: ____
RESIDENT ENGINEER ____ Approved: ____ Date: ____

Symb	Action	Description	Date	Appvd

U.S. ARMY ENGINEER DISTRICT
CORPS OF ENGINEERS
ANCHORAGE, ALASKA

Designed: BFC
Drawn: BFC
Reviewed: C. VONGUNTEN
Chief – Section
Submitted: D. FRENER
Chief – Branch
Date: 16 JULY 2009
Dwg Scale: AS NOTED
Plot Scale: 1:2
File: FTW336A-096-M4-07
Drawing # F-211-13-01

INV. NO. W911KB-09-R-0007
PN 65076
FTW336A

FT. WAINWRIGHT, ALASKA
AIRCRAFT PARTS STORAGE
MECHANICAL
CONTROLS
BASEBOARD, CUH, UH, & RCP CONTROL DIAGRAM AND MATRICES

Reference number:
M4.07

Drawing x:\UNIFIED\EN-TE\Jobs\FTW336A\Dwgs\FTW336A-096-M4-07.dwg last saved on 6/8/2009 12:19 PM was plotted by Curfew, Donald L POA on 7/17/2009 6:55 AM

ABBREVIATIONS NOT IN DICTIONARY

OTHER TENSES & PLURALS NOT SHOWN MAY ALSO BE USED

AF	–	AMPERE FRAME
AFF	–	ABOVE FINISHED FLOOR
AFG	–	ABOVE FINISHED GRADE
A.I.C.	–	AMPERES INTERRUPTING CAPACITY
ATS	–	AUTOMATIC TRANSFER SWITCH
C	–	CONDUIT
CB	–	CIRCUIT BREAKER
CKT	–	CIRCUIT
CLG	–	CEILING
CPF	–	COMPACT FLUORESCENT
COE	–	CORPS OF ENGINEERS
CT	–	CURRENT XFMR
EM	–	EMERGENCY
ENCL	–	ENCLOSURE
(E)	–	EXISTING
FDR	–	FEEDER
FLR	–	FLOOR
FUT	–	FUTURE
GEN	–	GENERATOR
GFI	–	GROUND FAULT INTERRUPTER
GND	–	GROUND
HBO	–	HEAD BOLT HEATER OUTLET
HOA	–	HAND–OFF–AUTOMATIC
HPS	–	HIGH PRESSURE SODIUM
IAW	–	IN ACCORDANCE WITH
INTLK	–	INTERLOCK
JB	–	JUNCTION BOX
LC	–	LIGHTING CONTACTOR
LGT	–	LIGHT
MAN	–	MANUAL
MEZZ	–	MEZZANINE
MLO	–	MAIN LUG ONLY
mm, MM	–	MILLIMETER
MTD	–	MOUNTED
MDP	–	MAIN DISTRIBUTION PANELBOARD
MCP	–	MOTOR CIRCUIT PROTECTOR
NC	–	NORMALLY CLOSED
NEC	–	NATIONAL ELECTRICAL CODE
NEUT OR N	–	NEUTRAL
NIC	–	NOT IN CONTRACT
NO	–	NORMALLY OPEN
NTS	–	NOT TO SCALE
(N)	–	NEW
PC	–	PHOTOCELL
PEN	–	PENDANT
PH OR Ø	–	PHASE
PRI	–	PRIMARY
PT	–	POTENTIAL XFMR
PWR	–	POWER
REC	–	RECESSED
RGS	–	RIGID STEEL CONDUIT
SEC	–	SECONDARY
SUPP	–	SUPPORT
SW	–	SWITCH
SWGR	–	SWITCHGEAR
TB	–	TERMINAL BOARD
TELE	–	TELEPHONE
TSTAT	–	THERMOSTAT
TTB	–	TELEPHONE TERMINAL BOARD
TYP	–	TYPICAL
UON	–	UNLESS OTHERWISE NOTED
W	–	WIRE
WAL	–	WALL
WP	–	WATERPROOF
XFER	–	TRANSFER
XFMR	–	TRANSFORMER

EXTERIOR POWER

V — NEW HEAD BOLT HEATER.

WP — GFCI DUPLEX OUTLET IN WEATHERPROOF ENCLOSURE 24" AFG (UON).

J — NEMA 4X JUNCTION BOX

EXTERIOR POWER CIRCUIT, CABLING AND PATHWAY AS NOTED ON PLANS

EXTERIOR COMMUNICATION

EXISTING COMMUNICATIONS HANDHOLE/MANHOLE

EXISTING COMM DUCT SYSTEM

NEW COM DUCT

EXISTING COMM DIRECT BURIED

SCHEMATIC/WIRING DIAGRAMS

TRANSFORMER

CIRCUIT BREAKER, THERMAL–MAGNETIC

SWITCH

INTERIOR GENERAL WIRING

HC — HOME RUN, IN CONDUIT UON. SLASHES INDICATES WIRES. LONG SLASH INDICATES NEUTRAL. SHORT SLASH INDICATES PHASE. SLASH WITH G INDICATES INSULATED GROUNDING CONDUCTOR (GREEN). NO SLASH INDICATES 2–#12 & 1–#12 GROUND UON. FOR LIGHTING CIRCUIT WITH EMERGENCY BALLAST, NO SLASH INDICATES 3–#12 & 1–#12 GROUND. ALL CONDUCTORS ARE #12 UON. ALL CONDUITS ARE 1/2" MINIMUM, UON. 120V BRANCH CIRCUITS GREATER THAN 100' IN LENGTH SHALL BE 3–#10 & 1–#12 GROUND IN 1/2" C. UON.

CONCEALED CONDUIT UON

DC MOTION SENSOR WIRING

PANELBOARD

DISCONNECT SWITCH.

COMBINATION MOTOR STARTER/DISCONNECT.

COMBINATION MOTOR STARTER/DISCONNECT W/DUPLEX CONTROLLER PROVIDE W/MANUAL MOTOR SELECTION SWITCH.

AUXILIARY SYSTEMS

COMM. OUTLET, PROVIDE CONDUIT AND SINGLE GANG BOX ROUGH–IN RECESSED, 18" AFF, UON

TP — WALL PHONE SINGLE RJ–45 OUTLET WITH MOUNTING LUG FACEPLATE 48" AFF. TYPICAL FOR "TP" DESIGNATION.

S — ¼ W PUBLIC ADDRESS SYSTEM SPEAKER. RECESSED CEILING MOUNT.

S — ½ W PUBLIC ADDRESS SYSTEM SPEAKER. WALL MOUNT, 96" AFF.

20W PUBLIC ADDRESS SYSTEM HORN TYPE SPEAKER EXTERIOR RATED. WALL MOUNT, 14' AFF.

CABLE TRAY; TYPE, SIZE AND MOUNTING HEIGHT AS NOTED ON PLANS.

MASS NOTIFICATION SPEAKER/AMBER STROBE IN FINISHED AREAS MOUNT NOT LESS THAN 80" TO THE BOTTOM OF THE DEVICE OR 6" BELOW THE CEILING WHICHEVER IS LOWER. IN BAY AREA MOUNT 14' AFF.

MNS — MASS NOTIFICATION CONTROL PANEL

MASS NOTIFICATION REMOTE OPERATORS CONSOLE/MICROPHONE 48" AFF

INTERIOR GENERAL WIRING (CON'T)

DUPLEX RECEPTACLE NEMA 5–20R, 18" AFF.

QUADPLEX RECEPTACLE NEMA 5–20R, 18" AFF.

GFCI RECEPTACLE NEMA 5–20R, 18" AFF. (UON)

EQUIPMENT CONNECTION

NEMA L6–30 RECEPTACLE 18" AFF.

S_3 — LIGHT SWITCH 48" AFF # INDICATES SWITCH WAYS

S_T — MOTOR RATED THERMAL PROTECTION 20A SNAP SWITCH FOR HEATER FAN DISCONNECT 48" AFF WITH LABEL.

HP — MOTOR. RATING IN HP AS INDICATED

LC — LIGHTING CONTROL PANEL 96" AFF. SEE DETAIL B ON E6.02.

D — PUSH BUTTON OVERHEAD DOOR CONTROL SWITCH 48" AFF

OS — SPECIFICATION GRADE INFRARED OCCUPANCY SENSOR, 20A RATED, WALL MOUNTED PER MANUFACTURER'S RECCOMENDATION WITH ON/OFF/AUTOMATIC SETTINGS. SHALL DETECT OCCUPANCY IN SHOWN ROOM/AREA. LOW VOLTAGE WIRING BETWEEN MULTIPLE SENSORS.

J — JUNCTION BOX

EM — LIGHTING FIXTURE SHALL BE PROVIDED WITH EMERGENCY BATTERY/BALLAST AND UNSWITCHED POWER SUPPLY.

NOT FOR CONSTRUCTION

BACKCHECK

US ARMY CORPS OF ENGINEERS
ALASKA DISTRICT

CONTRACT NO. ___
CONTRACTOR ___
CITY ___ STATE ___
PRIME CONTRACTOR ___ Recommended: ___
RESIDENT ENGINEER ___ Approved: ___ Date: ___

Symb	Action	Description	Date	Appvd

U.S. ARMY ENGINEER DISTRICT
CORPS OF ENGINEERS
ANCHORAGE, ALASKA

Designed: TH
Drawn: TH
Reviewed: R. Bolton
Chief ___ Section
Submitted: D. Frenier
Chief ___ Branch
Date: 16 JULY 2009
Dwg Scale: AS NOTED
Plot Scale: 1:2
File: FTW336A-097-E1-01
Drawing: F-F-211-13-01

INV. NO. W911KB-09-R-0007
PN 65076
FTW336A

FT. WAINWRIGHT, ALASKA
AIRCRAFT PARTS STORAGE
ELECTRICAL
GENERAL
LEGEND AND ABBREVIATIONS

Reference number:
E1.01
Sheet 97 of 118

Drawing x:\UNIFIED\EN-TE\Jobs\FTW336A\Dwgs\FTW336A-097-E1-01.dwg last saved on 6/2/2009 8:40 AM was plotted by Curfew, Donald L POA on 7/17/2009 6:55 AM

TYPE	QTY	TEST#	DESCRIPTION
22RT	3	22RT5B_1	Lithonia Lighting 22RT5B_1 OR EQUAL [TEST] LTL17048 [TESTLAB] ACUI 11/11/2008 [TESTDATE] 11/10/20 *LAMPS: (2) FP14/835, 1200 LUMENS* *BLST: QTP2x28T5/UNV P, WATTS= 32, VOLTS= 277*
2RT5	34	2RT5_28T	Lithonia Lighting 2RT5_28T OR EQUAL [TEST] LTL13260 [TESTLAB] [ISS Lithonia Lighting [LUMCAT] 2RT *LAMPS: (2) FP28/835/ECO, 2730 LUMENS* *BLST: , WATTS= 60, VOLTS= 277*
BL4S	19	HP08521	Hubbell, BL400Sx-HG22 OR EQUAL Highbay MOUNT 20' AFF. SUPERBAY I - 22" GLASS REFL (A HIGHBAY 400 WATT HPS PRISM. GL *LAMPS: (1) LU400/D, 47500 LUMENS* *BLST: STD. REF. BALLA, WATTS= 465, VOLTS= 277*
CSR	1	10331	Columbia, CSR4-232-EB8-PAF OR EQUAL Industrial & Strips 1 X 4 Industrial 2-LAMP BAKED WHITE ENAMEL REFLECTOR *LAMPS: (2) FO32/T8, 2900 LUMENS* *BLST: EB8, WATTS= 60, VOLTS= 277* PROVIDE WIRE GUARD OPTION
LHE4	6	13436	Columbia, LHEW4-454-ST-EB5 OR EQUAL Industrial & Strips LHE Industrial 14" X 48" 4-LA MOUNT 120" AFF IN MECH ROOM. *LAMPS: (4) F54T5HO, 4400 LUMENS* *BLST: EB5, WATTS= 228, VOLTS= 277*
WMN	1	wmn	Columbia, MWN4-232-A12-EB8 OR EQUAL MWN/MWW Wraparound 11" X 49" 2-LAMP WITH ACRYLIC *LAMPS: (2) .88, 2900 LUMENS* *BLST: B232I120RH, WATTS= 0*
228R	10	2RT5B_24	Lithonia Lighti, 2RT5B_24 OR EQUAL [TEST] LTL17068 [TESTLAB] ACUI 11/12/2008 [TESTDATE] 11/12/20 *LAMPS: (2) FB24/835/HO, 1750 LUMENS* *BLST: QTP2x39-24T5HO/, WATTS= 48*

NOTE:

1. THE FIXTURE SCHEDULE SHOWS FIXTURES USED AS BASIS FOR LAYOUT, LIGHT LEVEL CALCULATION, AND LOAD CALCULATIONS. THE CONTRACTOR MAY PROVIDE FIXTURES FROM MANUFACTURERS OTHER THAN SHOWN ON THE FIXTURE SCHEDULE BUT FIXTURES PROVIDED SHALL HAVE SIMILAR SPECS, FEATURES, AND STYLE AS THE ONE SHOWN ON THE FIXTURE SCHEDULE.
2. FOR INTERIOR FIXTURES PROVIDE EMERGENCY BALLASTS FOR FIXTURES AND CIRCUITS SHOWN ON E3.01.
3. VERIFY CEILING TYPES THROUGHOUT AND PROVIDE ALL MOUNTING HARDWARE INCLUDING ANY FLANGES RECOMMENDED BY THE LIGHTING MANUFACTURER FOR THE SPECIFIC CEILING TYPE. PROVIDE ANY "TENTING" AS REQUIRED TO MAINTAIN FIRE RATING OF CEILINGS.
4. FIXTURES WITH 3 LAMPS SHALL UTILIZE DEDICATED 3-LAMP BALLASTS.
5. "EM" DENOTES EMERGENCY BATTERY BALLAST.
6. HPS LAMPS SHALL HAVE CORRECT COLOR RENDERING SIMILAR TO SOFT WHITE.
7. FLUORESCENT LAMPS SHALL HAVE A COLOR TEMPERATURE OF 3,500K AND A COLOR RENDERING INDEX OF 82+.

TYPE	QTY	TEST#	DESCRIPTION
LHR3	2	13942	Columbia, LHR4-332-ST-EB8 OR EQUAL LHR Industrial MOUNT 120" AFF 10 x 48 3-lamp with solid glos *LAMPS: (3) F32T8, 2900 LUMENS* *BLST: REL-3P32-SC, WATTS= 92, VOLTS= 277*
TBX3	13	PL5549	Prescolite, TBX-TO4S OR EQUAL Open Downlights CF LITEBOX DL; CLEAR ALZAK W/ WHITE REFL TRIM; VERTICAL LAMP *LAMPS: (1) (1) PL-T 32W/35/4P, (PHILIPS), 2400 LUMENS* *BLST: STANDARD, WATTS= 38* PROVIDE DAMP RATED LENS IN SHOWER AREA
WP	2	WP_2_17_	Lithonia Lighting WP_2_17 OR EQUAL [TEST] L6520 [TESTLAB] [ISSUED Lithonia Lighting [LUMCAT] WP *LAMPS: (2) F17T8/SPX35, 1300 LUMENS* *BLST: , WATTS= 34, VOLTS= 277* MOUNT 80"AFF
⊗H			DIE CAST ALUMINUM EXIT SIGN, STENCIL FACE, LED LAMPS, SEALED BATTERY, SINGLE FACED, RED LETTERS. PROVIDE BACK, SIDE, OR TOP MOUNT AS REQUIRED. LITHONIA LE EL N OR EQUAL. MOUNT PER ADA, LOWEST POINT 80" WALKING CLEARANCE. REMOTE 6W EE FIXTURE AT EXTERIOR DOORS.
WF			HALF FACED, ROUND, SURFACE MOUNT, DIE CAST EXTERIOR FIXTURE INTERNAL PRISM GLASS LENS, -40 DEGREE BALLAST, 70 WATT HPS MEDIUM BASE LAMP, DARK BRONZE COLOR KIM WF21 LQM OR EQUAL. MOUNTING HEIGHT 16' AFG ABOVE VEHICLE DOORS, 12' AFG ALL OTHERS.
EF			HALF FACED, SQUARE, SURFACE MOUNT, DIE CAST EXTERIOR FIXTURE INTERNAL PRISM GLASS LENS, -40 DEGREE BALLAST, 70 WATT HPS MEDIUM BASE LAMP, DARK BRONZE COLOR DEVINE TRG 20 OR EQUAL. MOUNTING HEIGHT 12' AFG.
EMEX			DUAL HEAD HIGH CAPACITY EMERGENCY EXIT LIGHT DUAL 6V 20W HALOGEN LAMPS, 90 MINIUTE CAPACITY SEALED LEAD CALCIUM BATTERY THERMOPLASTIC HOUSING, SIMILAR TO LITHONIA ELMH2006 SD, MOUNT TO JOISTS.
PK/150			CUTOFF, RECTANGULAR AREA LIGHT, BRONZE FINISH. SPAULDING RAVEN RCS FORWARD THROW, SIDE SHIELD 27' POLE WITH FINISH MATCHING FIXTURE 1-150W HPS MAGNETIC REGULATOR -40 DEGREE F RATED PROVIDE INTEGRAL PHOTOCELL CONTROL.
RF8			VOLUMETRIC RECESSED TROFFER FIXTURE 2 X 4 TYPE VOLUMETRIC LAMP QUANTITY 2 LAMP TYPE F28T5 FIXTURE WATTAGE 58 277V BALLAST FACTOR 0.95 ACRYLIC PRISMATIC REFRACTOR, ONE PIECE STEEL REFLECTOR. LITHONIA 2RT5 OR EQUIVALENT. PROVIDE F14T5 LAMPS FOR 2 X 2 FIXTURES.
EE			WALL MOUNTED REMOTE EMERGENCY LIGHTING FIXTURE HEAD. UL LISTED FOR WET LOCATIONS 6 VOLT 6W HALOGEN. POWER FROM ADJACENT EXIT SIGN OR SUPPLY STAND ALONE BATTERY/CHARGER AS SHOWN ON PLANS. LITHONIA ELA- H66 OR EQUAL. WALL MOUNT 6" ABOVE DOOR FRAME.

NOT FOR CONSTRUCTION
BACKCHECK

US ARMY CORPS OF ENGINEERS
ALASKA DISTRICT

CONTRACT NO. ____
CONTRACTOR ____
CITY ____ STATE ____
PRIME CONTRACTOR ____
Recommended: ____
RESIDENT ENGINEER ____
Approved: ____
Date: ____

Symb	Action	Description	Date	Appvd

U.S. ARMY ENGINEER DISTRICT
CORPS OF ENGINEERS
ANCHORAGE, ALASKA

Designed: TH
Drawn: TH
Reviewed: R. Bolton
Chief - CEPOA-EN-TE-MP - Section
Submitted: D. Frenter
Chief - CEPOA-EN-TE - Branch
Date: 16 JULY 2009
Dwg Scale: AS NOTED
Plot Scale: 1:2
File: FTW336A-098-E1-02
Drawing No: F-211-13-01
FTW336A
INV. NO. W911KB-09-R-0007
PN 65076

FT. WAINWRIGHT, ALASKA
AIRCRAFT PARTS STORAGE
ELECTRICAL
GENERAL
LIGHTING FIXTURE SCHEDULE

Reference number:
E1.02
Sheet 98 of 118

Drawing x:\UNIFIED\EN-TE\Jobs\FTW336A\Dwgs\FTW336A-098-E1-02.dwg last saved on 6/2/2009 9:27 AM was plotted by Curfew, Donald L POA on 7/17/2009 6:55 AM

NOTES:

ALL WORK SHALL BE IN ACCORDANCE WITH ARMY I3A TECHNICAL GUIDANCE

1. PROVIDE 2PVC–4"SCHEDULE 40 PVC CONCRETE ENCASED DUCT BANK FROM THE NEW BUILDING COMM ROOM TO A NEW MANHOLE (MH5–41A) BETWEEN BUILDINGS 2097 AND 2079. THE NEW MANHOLE SHALL INTERCEPT TWO EXISTING 4 INCH PVC DUCTS ONE DUCT HAS 4–1 INCH PVC SUBDUCTS WITHIN WHICH CARRY BOTH ACTIVE FIBER OPTIC AND COPPER CABLE SERVICES TO BUILDING 2079. THE CONTRACTOR SHALL COORDINATE A MINIMAL DISRUPTION WEEKEND SERVICE OUTAGE WITH THE CUSTOMER OF BUILDING 2079, THE ARMY COMMUNICATIONS CENTRAL OFFICE (CO) AND LOCAL NETWORK COMM CENTER, THE OUTAGE SHALL BE LIMITED TO A TOTAL OF 64 HOURS BEGINNING FRIDAY @ 16:00HRS ENDING MONDAY MORNING @ 08:00HRS. DURING THIS TIME THE CONTRACTOR SHALL REMOVE ACTIVE 12 STRANDS SINGLE MODE FIBER OPTIC CABLE AND 50 PAIR 24 AWG COPPER CABLE (PE–89), THEN, CUT AND SWEEP THE EXISTING DUCTS INTO THE NEW MANHOLE FROM BOTH DIRECTIONS AND PROVIDE NEW CABLING TO AND REINSTALL SERVICE TO BLDG 2079..

2. A NEW 3 CELL, 3 INCH FABRIC INNERDUCT SHALL BE PROVIDED THROUGH EXISTING DUCTS AND MANHOLES ALONG MONTGOMERY ROAD AND FROM NEW MH5–41A TO NEW FACILITY MAIN COMMUNICATIONS ROOM AND BLDG 2079 COMMUNICATIONS SERVICE ENTRANCE. AN ADDITIONAL PULL CORD SHALL BE PLACED ALONG SIDE THE FABRIC INNERDUCT. CONTRACTOR SHALL COORDINATE DUCT ASSIGNMENTS AND DISTRIBUTION. CONTRACTOR IS RESPONSIBLE FOR ALL TRANSFER WORK AND REESTABLISHING ACTIVE SERVICES.

3. NEW EXTERIOR COMMUNICATIONS SHALL CONSIST OF NEW INSTALL/SPLICE/TEST 100 PAIR 24 AWG FILLED COPPER CABLE (PE–89) RUN FROM EXISTING MANHOLE 5–41 TO THE NEW MH5–41A. A NEW 50 PAIR 24 AWG FILLED COPPER CABLE (PE–89) SHALL RUN FROM THE NEW MH5–41A, THROUGH THE NEW 4" DUCT TO THE NEW BUILDING. AND A NEW 50 PAIR 24 AWG FILLED COPPER CABLE (PE–89) SHALL RUN FROM THE NEW MH5–41A, THROUGH THE EXISTING DUCT TO BUILDING 2079.

4. NEW 48 STRAND, SINGLE–MODE FIBER OPTIC CABLE WITH SERVICE LOOPS AND FUSION SPLICES SHALL BE PROVIDED FROM EXISTING MANHOLE 5–36 AT THE CORNER OF LUZON AND MONTGOMERY RD. TO MANHOLE 5–39.
A NEW 24 STRAND, SINGLE–MODE FIBER OPTIC CABLE WITH SERVICE LOOPS AND FUSION SPLICED SHALL BE PROVIDED FROM EXISTING MANHOLE 5–39 TO NEW MANHOLE 5–41.

5. NEW 12 STRAND, SINGLE–MODE FIBER OPTIC CABLE WITH SERVICE LOOPS AND FUSION SPLICED SHALL BE PROVIDED FROM MANHOLE 5–41 THROUGH NEW MANHOLE 5–41A TO NEW FACILITY. A NEW 12 STRAND, SINGLE–MODE FIBER OPTIC CABLE WITH SERVICE LOOPS AND FUSION SPLICED SHALL BE PROVIDED FROM MANHOLE 5–41 THROUGH NEW MANHOLE 5–41A TO BUILDING 2079 A NEW BUILDING ENTRANCE PROTECTOR (BEP) SHALL BE PROVIDED FOR THE NEW BUILDING COPPER CABLE, AND FIBER OPTIC PATCH PANELS CABINETS SHALL BE PROVIDED FOR THE NEW BUILDING FIBER CABLES WITH FUSION SPLICED PIGTAILS; BOTH COPPER AND FIBER FUSION SPLICE/TERMINATIONS SHALL BE PROVIDED ON BOTH ENDS OF ALL CABLING.

6. PROVIDE NEW 4" DIA CONCRETE ENCASED PRE–FABRICATED SPLIT DUCT AROUND EXISTING DIRECT BURIED CABLING UNDER NEW PAVEMENT.

7. COORDINATE CABLE COUNTS WITH WITH SIGNAL BATTALION. VERIFY CABLE COUNTS TO AUTOMATION NODE (BLDG 3000) AND DISTRIBUTION NODE (BLDG 3407). COORDINATE DUCT ASSIGNMENTS IN EACH MANHOLE WITH SIGNAL BATTALION PRIOR TO PULLING IN CABLING. CONTRACTOR SHALL PRODUCE AND SUBMIT AS–BUILT AUTOCAD BUTTERFLY DIAGRAMS OF MANHOLES MH 5–41 AND 5–41A.

8. FOC SHALL MEET THE REQUIREMENTS OF I3A TABLE 6 CABLE CHARACTERISTICS.

9. REPLACE EXISTING FLEXIBLE DISTRIBUTION COAXIAL CABLE WITH NEW 625 TRUNK AND DISTRIBUTION COAXIAL CABLE PER GCI SPECIFICATIONS. CABLE INSTALLATION SHALL INCLUDE APPROXIMATELY 250' OF CABLING AND TWO SPLICES. COORDINATE WITH GCI, MR. DON SMITH 978–2262 FOR INSTALLATION SPECIFICATIONS, AND OUTAGE COORDINATION.

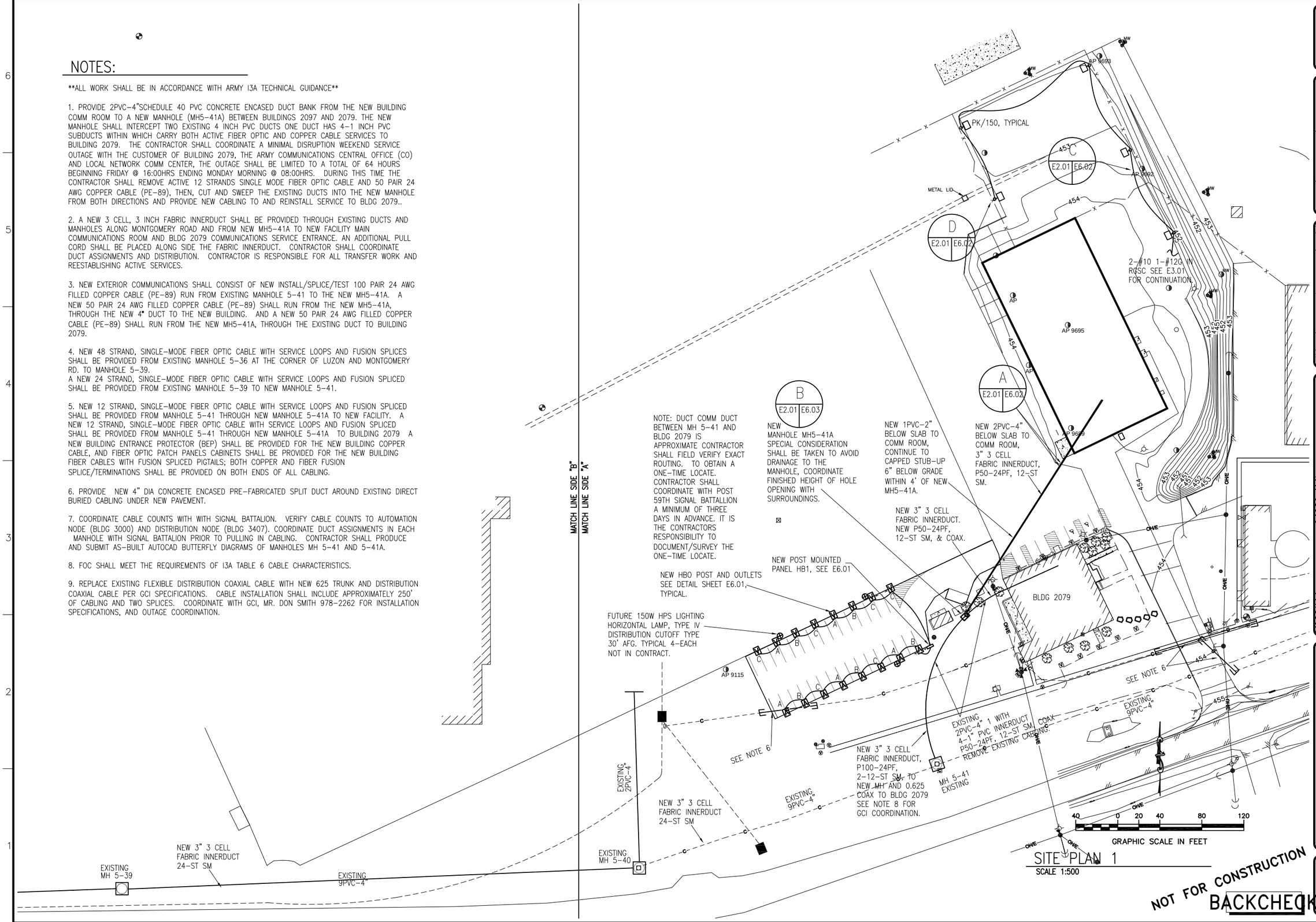

US ARMY CORPS OF ENGINEERS
ALASKA DISTRICT

CONTRACT NO. ___
CONTRACTOR ___
CITY ___ STATE ___
PRIME CONTRACTOR — Recommended: ___
RESIDENT INSPECTOR — Approved: ___ Date: ___

Sym	Action	Description	Date	Appvd

U.S. ARMY ENGINEER DISTRICT
CORPS OF ENGINEERS
ANCHORAGE, ALASKA

Designed: TH
Drawn: TH
Reviewed: R. Bolton
Chief — Section
Submitted: D. Frenter
Chief — Branch
Date: 16 JULY 2009
Dwg Scale: AS NOTED
Plot Scale: 1:2
File: FTW336A-099-E2-01
Drawing #: F-211-13-01

INV. NO. W911KB-09-R-0007
PN 65076
FTW336A

FT. WAINWRIGHT, ALASKA
AIRCRAFT PARTS STORAGE
ELECTRICAL
PLANS
SITE PLAN 1

Reference number:
E2.01

Drawing x:\UNIFIED\EN–TE\Jobs\FTW336A\Dwgs\FTW336A–099–E2–01.dwg last saved on 7/16/2009 3:03 PM was plotted by Curfew, Donald L POA on 7/17/2009 6:55 AM

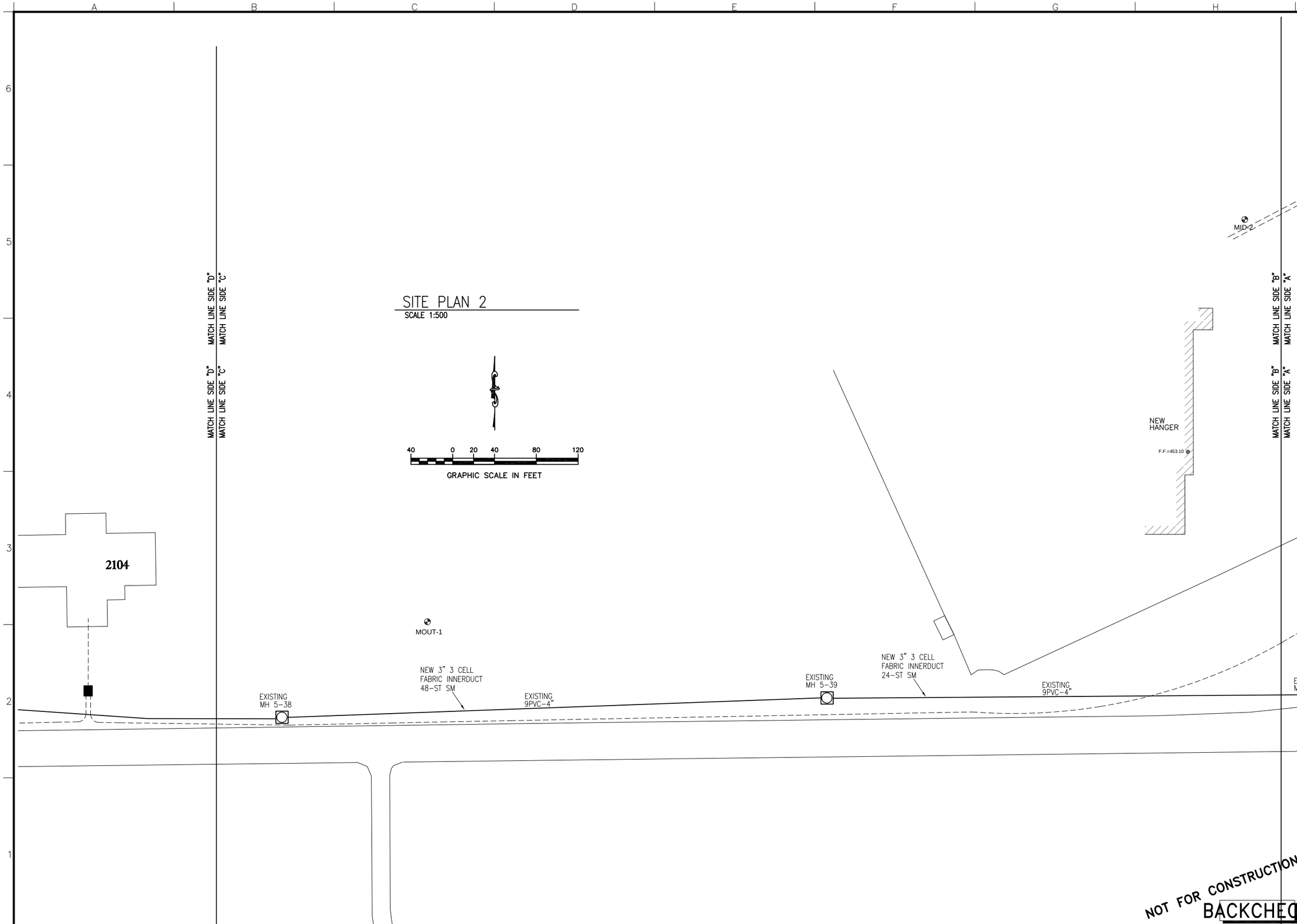

US ARMY CORPS OF ENGINEERS
ALASKA DISTRICT

CONTRACT NO. ____
CONTRACTOR ____
CITY ____ STATE ____
PRIME CONTRACTOR ____ Recommended: ____
RESIDENT ENGINEER ____ Approved: ____ Date: ____

Symb	Action	Description	Date	Appvd

U.S. ARMY ENGINEER DISTRICT
CORPS OF ENGINEERS
ANCHORAGE, ALASKA

Designed: T.H.
Drawn: T.H.
Reviewed: R. Bolton
Chief — GEOG-ENG-E-MF — Section
Submitted: D. Frenier
Chief — GEOG-ENG-E — Branch
Date: 16 JULY 2009
Dwg Scale: AS NOTED
Plot Scale: 1:2
File: FTW336A-100-E2-02
Drawing #: F-211-13-01

INV. NO. W911KB-09-R-0007
PN 65076
FTW336A

FT. WAINWRIGHT, ALASKA
AIRCRAFT PARTS STORAGE
ELECTRICAL
PLANS
SITE PLAN 2

Reference number:
E2.02
Sheet 100 of 118

Drawing x:\UNIFIED\EN-TE\Jobs\FTW336A\Dwgs\FTW336A-100-E2-02.dwg last saved on 3/30/2009 10:26 AM was plotted by Curfew, Donald L POA on 7/17/2009 6:55 AM

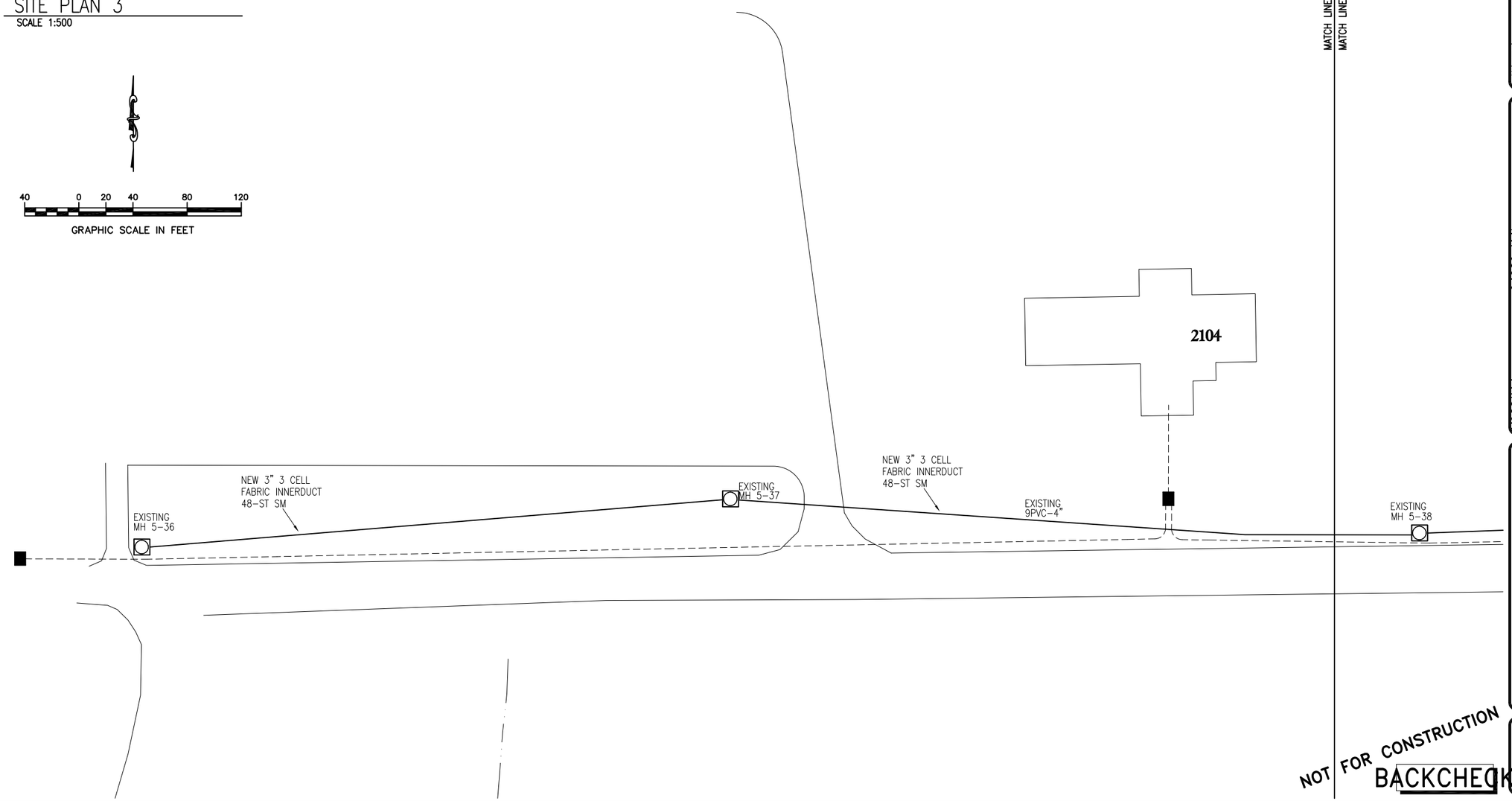

NOT FOR CONSTRUCTION
BACKCHECK

US ARMY CORPS
OF ENGINEERS
ALASKA DISTRICT

CONTRACT NO. ____
CONTRACTOR ____
CITY ____ STATE ____
Recommended: ____ PRIME CONTRACTOR
Approved: ____ RESIDENT ENGINEER
Date: ____

Symb	Action	Description	Date	Appvd

U.S. ARMY ENGINEER DISTRICT
CORPS OF ENGINEERS
ANCHORAGE, ALASKA

Designed: T.H.
Drawn: T.H.
Reviewed: R. Bolton
Chief ___ CEPOA-EN-TE-MF ___ Section
Submitted: D. Frenter
Chief ___ CEPOA-EN-CW-E ___ Branch
Date: 16 JULY 2009
Dwg Scale: AS NOTED
Plot Scale: 1:2
File: FTW336A-101-E2-03
Drawing No. F-211-13-01
FAA No. W911KB-09-R-0007
PN 65076
FTW336A

FT. WAINWRIGHT, ALASKA
AIRCRAFT PARTS STORAGE
ELECTRICAL
PLANS
SITE PLAN 3

Reference number:
E2.03
Sheet 101 of 118

Drawing x:\UNIFIED\EN-TE\Jobs\FTW336A\Dwgs\FTW336A-101-E2-03.dwg last saved on 3/30/2009 10:26 AM was plotted by Curfew, Donald L POA on 7/17/2009 6:56 AM

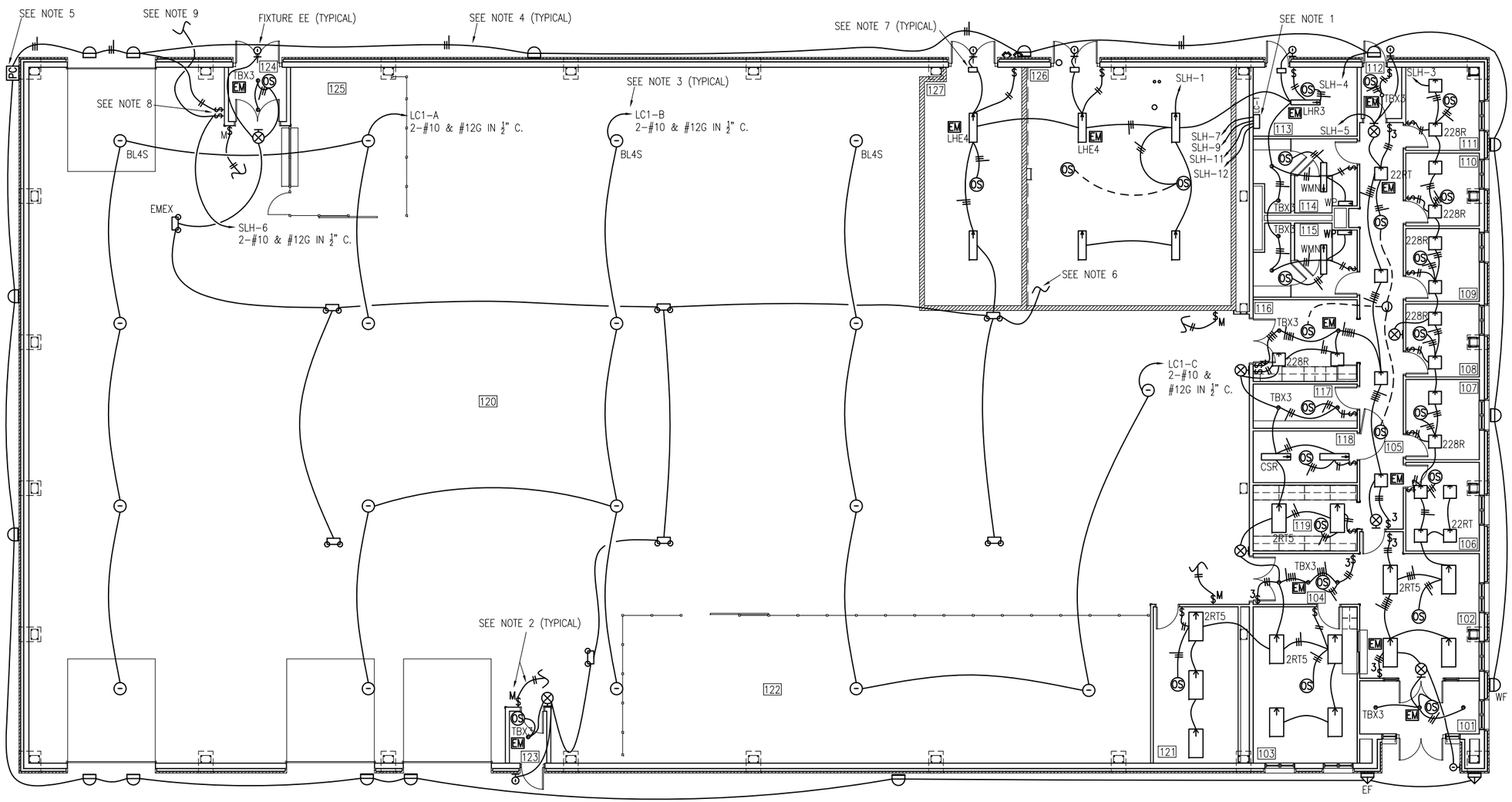

LIGHTING PLAN

SCALE 1/8" = 1'

NOTES:

1. BAY LIGHTING CONTROLS PANEL SEE DETAIL B E6.02
2. BAY LIGHTING CONTROLS PANEL REMOTE GROUP SWITCH, CONTINUE IN CONDUIT TO LIGHTING CONTROLS PANEL
3. BAY LIGHTING CIRCUIT CONTINUE IN CONDUIT TO LIGHTING CONTROLS PANEL
4. EXTERIOR LIGHTING CIRCUITRY SHOWN OUTSIDE FOR CLARITY ONLY CONDUIT TO BE ROUTED INTERIOR OF BUILDING
5. EXTERIOR RATED PHOTOCELL CONTROL 20A 277V MOUNT 1' BELOW EVE, POINT TOWARD NORTH SKY.
6. TO MEZZANINE LIGHTING SEE E3.03 FOR CONTINUATION.
7. STAND ALONE CHARGER/BATTERY FOR REMOTE HEAD WALL MOUNTED ABOVE DOORWAY.
8. PROVIDE RESPECTIVE PERMANENT ENGRAVED PLASTIC LABELS ABOVE SWITCHES STATING "BUILDING MOUNTED EXTERIOR LIGHTING" AND "POLE MOUNTED YARD LIGHTING".
9. CONTINUE TO YARD LIGHTING SEE E2.01.

0 5 10 20 30

GRAPHIC SCALE IN FEET

NOT FOR CONSTRUCTION

BACKCHECK

US ARMY CORPS OF ENGINEERS
ALASKA DISTRICT

CONTRACT NO.
CONTRACTOR
CITY
STATE
PRIME CONTRACTOR
Recommended:
RESIDENT ENGINEER
Approved:
Date:

Comm. Action	Description	Date	Appvd

U.S. ARMY ENGINEER DISTRICT
CORPS OF ENGINEERS
ANCHORAGE, ALASKA

Designed: T.H.
Drawn: T.H.
Reviewed: R. Bolton
Chief: ---
Section
Submitted: D. Fremer
Chief: ---
Branch
Date: 16 JULY 2009
Dwg. Scale: AS NOTED
Plot Scale: 1:2
File: FTW336A-102-E3-01
Drawing: N F-211-13-01

INV. NO. W911KB-09-R-0007
PN 65076
FTW336A

FT. WAINWRIGHT, ALASKA
AIRCRAFT PARTS STORAGE
ELECTRICAL
PLANS
LIGHTING PLAN

Reference number:
E3.01

Drawing x:\UNIFIED\EN-TE\Jobs\FTW336A\Dwgs\FTW336A-102-E3-01.dwg last saved on 7/16/2009 2:06 PM was plotted by Curfew, Donald L POA on 7/17/2009 6:56 AM

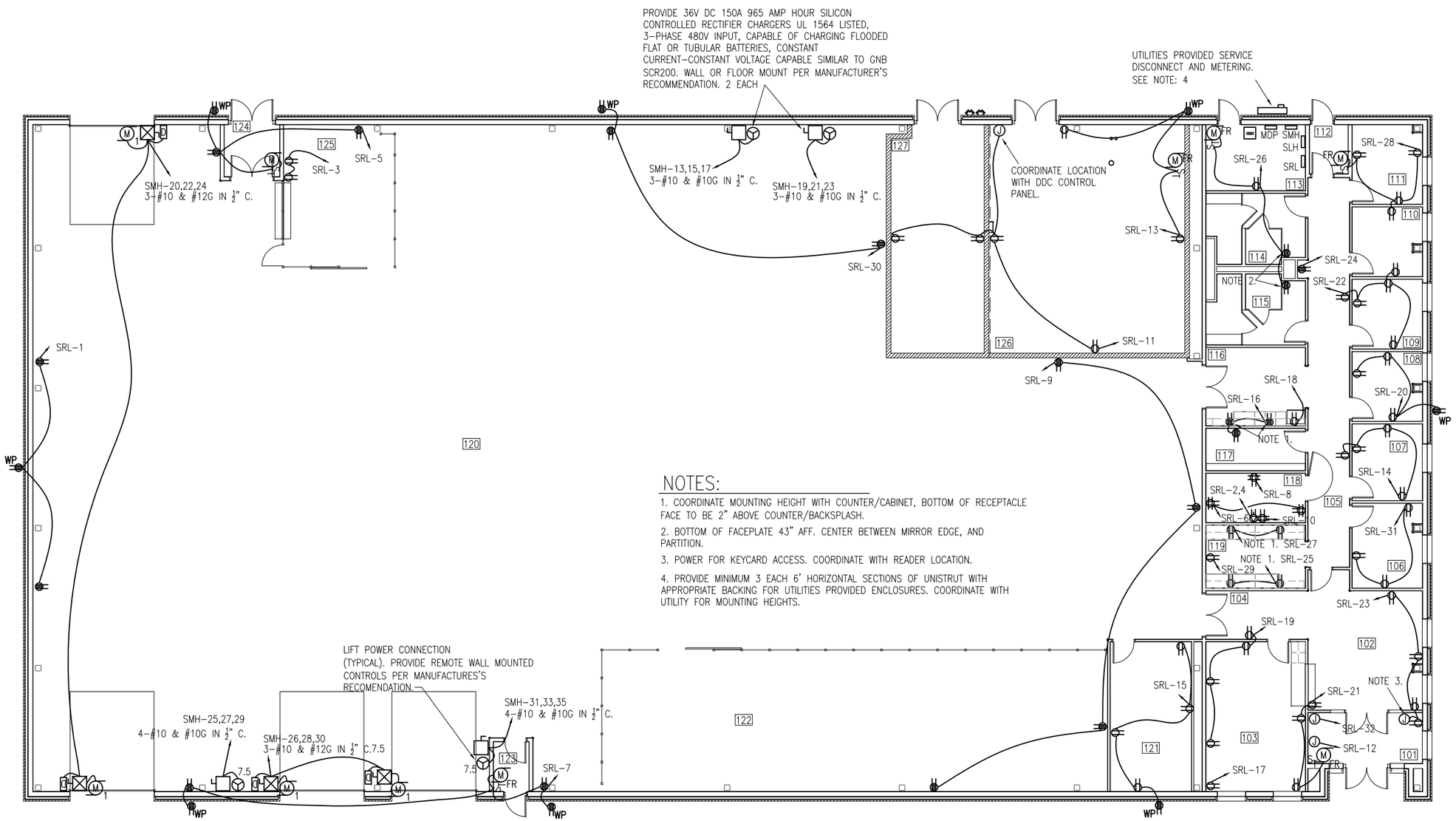

NOTES:

1. COORDINATE MOUNTING HEIGHT WITH COUNTER/CABINET, BOTTOM OF RECEPTACLE FACE TO BE 2" ABOVE COUNTER/BACKSPLASH.
2. BOTTOM OF FACEPLATE 43" AFF. CENTER BETWEEN MIRROR EDGE, AND PARTITION.
3. POWER FOR KEYCARD ACCESS. COORDINATE WITH READER LOCATION.
4. PROVIDE MINIMUM 3 EACH 6' HORIZONTAL SECTIONS OF UNISTRUT WITH APPROPRIATE BACKING FOR UTILITIES PROVIDED ENCLOSURES. COORDINATE WITH UTILITY FOR MOUNTING HEIGHTS.

POWER PLAN

SCALE 1/8" = 1'

0 5 10 20 30

GRAPHIC SCALE IN FEET

NOT FOR CONSTRUCTION

BACKCHECK

US ARMY CORPS OF ENGINEERS
ALASKA DISTRICT

CONTRACT NO. _____
CONTRACTOR _____
CITY _____ STATE _____
PRIME CONTRACTOR Recommended: _____
RESIDENT ENGINEER Approved: _____ Date: _____

Sym	Action	Description	Date	Appvd

U.S. ARMY ENGINEER DISTRICT
CORPS OF ENGINEERS
ANCHORAGE, ALASKA

Designed: TH
Drawn: TH
Reviewed: R. Bolton
Chief: ___ Section: ___
Submitted: D. Frenier
Chief: ___ Branch: ___
Date: 16 JULY 2009
Dwg Scale: AS NOTED
Plot Scale: 1:2
File: FTW336A-103-E3-02
Drawing No: F-211-13-01

INV. NO. W911KB-09-R-0007
PN 65076
FTW336A

FT. WAINWRIGHT, ALASKA
AIRCRAFT PARTS STORAGE
ELECTRICAL
PLANS
POWER PLAN

Reference number:
E3.02
Sheet 103 of 118

Drawing x:\UNIFIED\EN-TE\Jobs\FTW336A\Dwgs\FTW336A-103-E3-02.dwg last saved on 7/10/2009 7:50 AM was plotted by Curfew, Donald L POA on 7/17/2009 6:56 AM

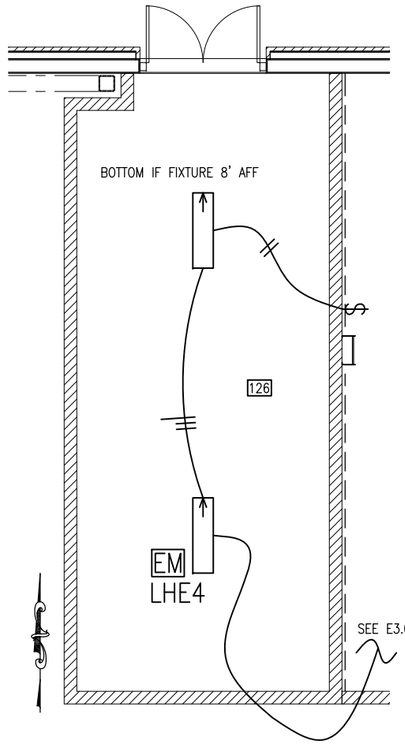

ENLARGED MEZZANINE LIGHTING PLAN

SCALE 1/4" = 1'

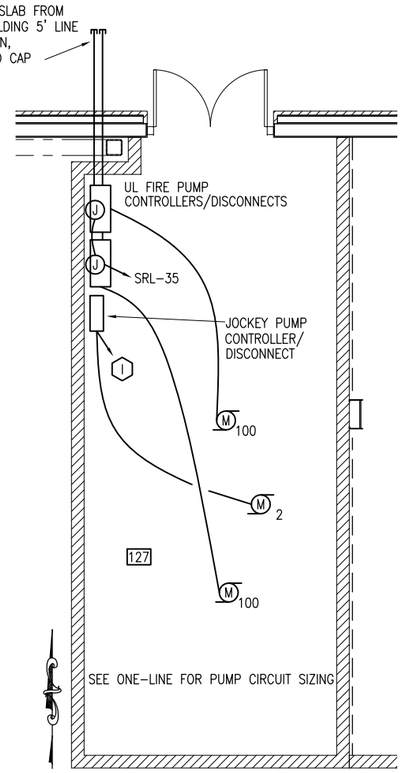

ENLARGED FIRE PUMP ROOM POWER PLAN

SCALE 1/4" = 1'

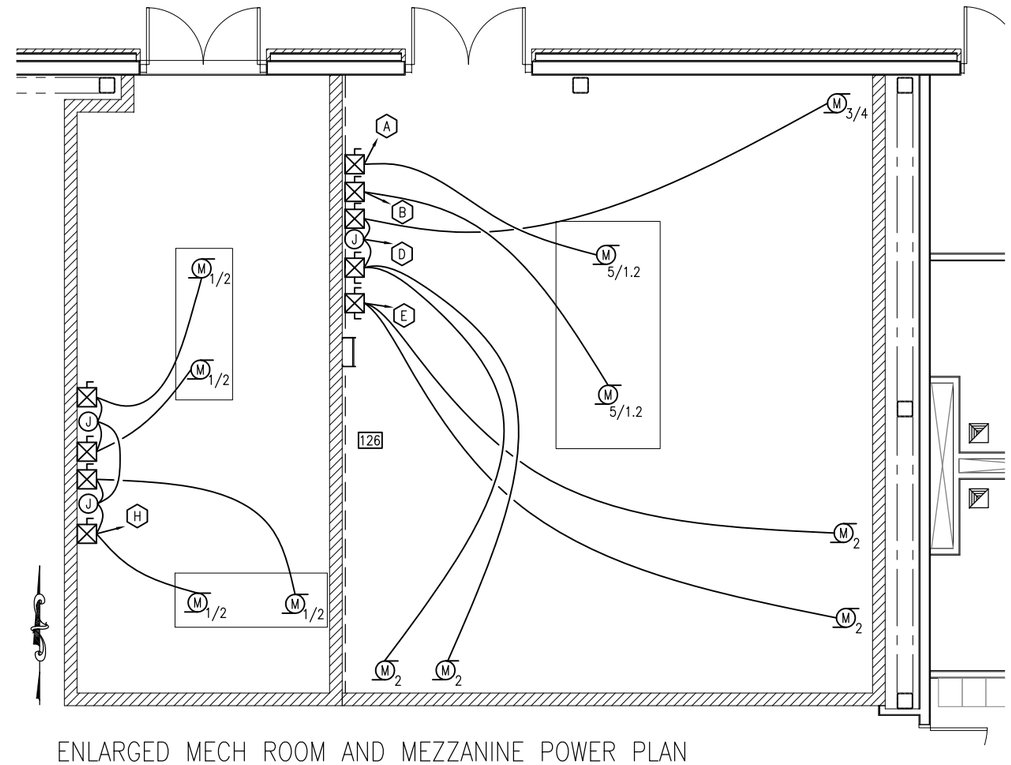

ENLARGED MECH ROOM AND MEZZANINE POWER PLAN

SCALE 1/4" = 1'

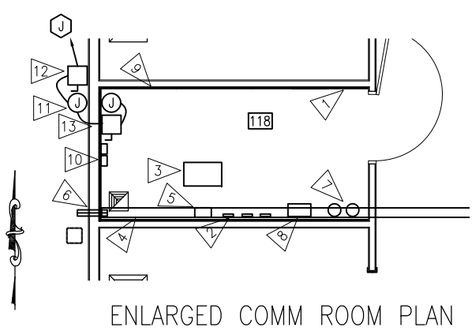

ENLARGED COMM ROOM PLAN

SCALE 1/4" = 1'

COMM ROOM NOTES:

1. TYPE AC FIRE RETARDANT PLYWOOD BACKBOARD (TYPICAL)
2. GROUNDING BAR WITH ISOLATORS,
3. FREE STANDING DATA RACK WITH HORIZONTAL AND VERTICAL CABLE MANAGEMENT,
4. OVERHEAD CABLE TRAY
5. VERTICAL CABLE TRAY TO TOP OF TTB. SECURE TO WALL, CABLE TRAY, CEILING AND DATA RACK.
6. PENETRATION THROUGH RATED WALL. COORDINATE WITH CONSTRUCTION. SEAL/FIRE STOP TO WALL RATING OR BETTER
7. SERVICE ENTRANCE CONDUITS FOR CABLING, FROM BELOW
8. INCOMING TERMINATION BLOCKS, ENTRANCE PROTECTORS.
9. AREA RESERVED FOR PA EQUIPMENT
10. J-BOXES FOR FUTURE CAMERA CONDUITS 60" AFF.
11. PACKAGED AC UNIT.
12. AC UNIT DISCONNECT. PROVIDE 2-POLE DISCONNECT PER. MANUFACTURES RECOMMENDATION.
13. AC UNIT INTERIOR UNIT CONNECTION, PROVIDE 3-POLE DISCONNECT AND ASSOCIATED MANUFACTURES RECOMMENDED 4-CONDUCTOR #12 CABLE IN ½" C CONNECTION TO MAIN UNIT.

BRANCH CIRCUIT SCHEDULE			STARTER/ DISCONNECT SIZING
A	SMH-2,4,6	4-#12, 1-#12G IN 1/2" C.	NEMA 0
NOTE REQUIRED 2-SPEED MOTOR AND CONTROLLER			
B	SMH-8,10,12	4-#12, 1-#12G IN 1/2" C.	NEMA 0
NOTE REQUIRED 2-SPEED MOTOR AND CONTROLLER			
D	SMH-7,9,11	4-#12, 1-#12G IN 1/2" C.	NEMA 00
E	SMH-1,3,5	4-#12, 1-#12G IN 1/2" C.	NEMA 00
H	SMH-14,16,18	4-#12, 1-#12G IN 1/2" C.	NEMA 00
I	SMH-37,39,41	4-#12, 1-#12G IN 1/2" C.	NEMA 00
J	SRL-42	2-#12, 1-#12G IN 1/2" C.	H.P. RATED

0 2.5 5 10 15

PLANS GRAPHIC SCALE IN FEET

NOT FOR CONSTRUCTION

BACKCHECK

US ARMY CORPS OF ENGINEERS
ALASKA DISTRICT

CONTRACT NO. _____
CONTRACTOR _____
CITY _____ STATE _____
PRIME CONTRACTOR — Recommended: _____
RESIDENT ENGINEER — Approved: _____ Date: _____

Sym	Action	Description	Date	Appvd

U.S. ARMY ENGINEER DISTRICT
CORPS OF ENGINEERS
ANCHORAGE, ALASKA

Designed: J.P.O.
Drawn: J.P.O.
Reviewed: R. Bolton
Chief – Section
Submitted: D. Frenier
Chief – Branch
Date: 16 JULY 2009
Dwg Scale: AS NOTED
Plot Scale: 1:2
File: FTW336A-104-E3-03
Drawing #: F-211-13-01

INV. NO. W911KB-09-R-0007
PN 65076
FTW336A

FT. WAINWRIGHT, ALASKA
AIRCRAFT PARTS STORAGE
ELECTRICAL
PLANS
ENLARGED PLANS

Reference number:
E3.03
Sheet 104 of 118

Drawing x:\UNIFIED\EN-TE\Jobs\FTW336A\Dwgs\FTW336A-104-E3-03.dwg last saved on 7/15/2009 2:54 PM was plotted by Curfew, Donald L POA on 7/17/2009 6:56 AM

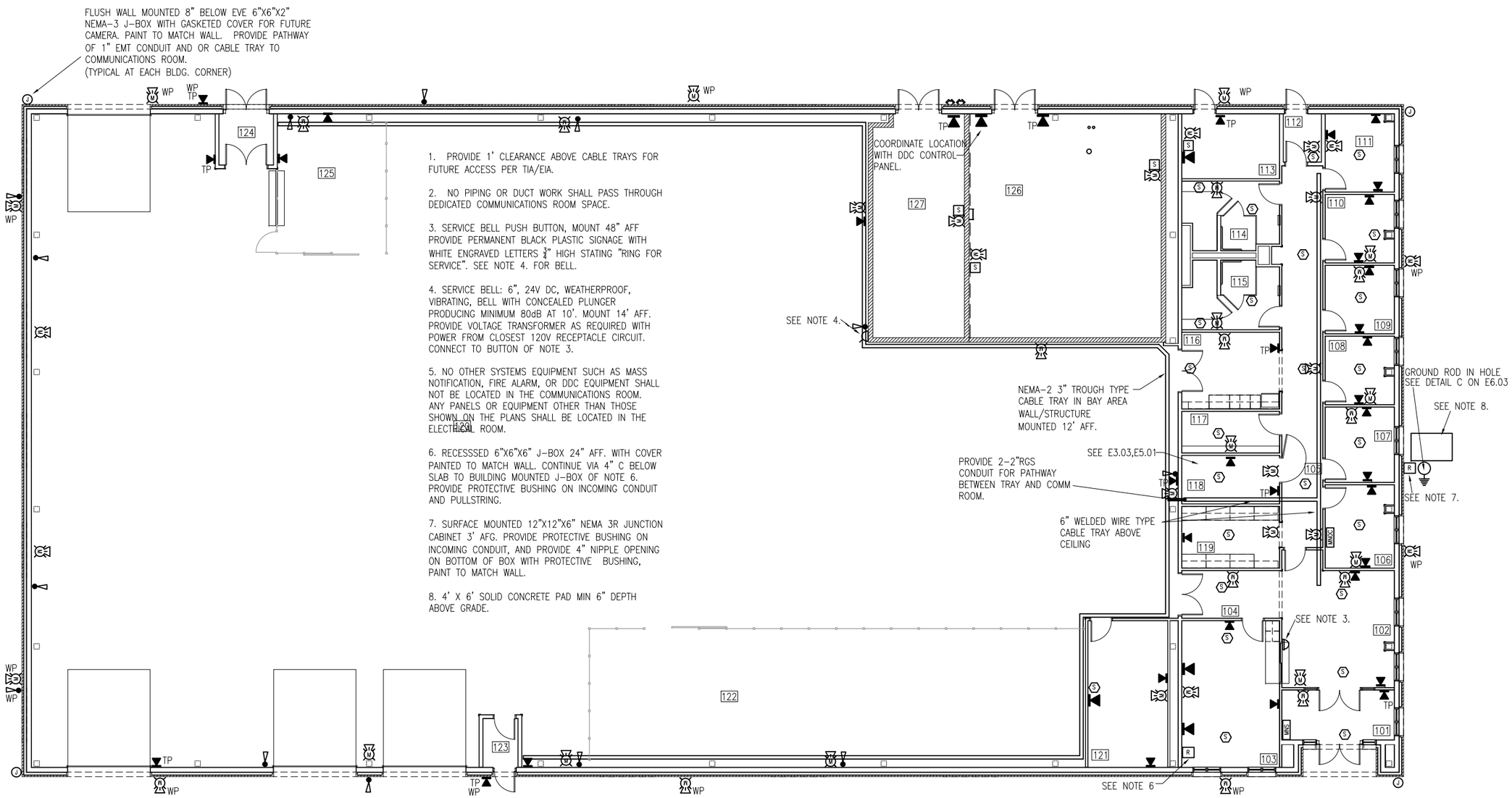

1. PROVIDE 1' CLEARANCE ABOVE CABLE TRAYS FOR FUTURE ACCESS PER TIA/EIA.

2. NO PIPING OR DUCT WORK SHALL PASS THROUGH DEDICATED COMMUNICATIONS ROOM SPACE.

3. SERVICE BELL PUSH BUTTON, MOUNT 48" AFF PROVIDE PERMANENT BLACK PLASTIC SIGNAGE WITH WHITE ENGRAVED LETTERS ¾" HIGH STATING "RING FOR SERVICE". SEE NOTE 4. FOR BELL.

4. SERVICE BELL: 6", 24V DC, WEATHERPROOF, VIBRATING, BELL WITH CONCEALED PLUNGER PRODUCING MINIMUM 80dB AT 10'. MOUNT 14' AFF. PROVIDE VOLTAGE TRANSFORMER AS REQUIRED WITH POWER FROM CLOSEST 120V RECEPTACLE CIRCUIT. CONNECT TO BUTTON OF NOTE 3.

5. NO OTHER SYSTEMS EQUIPMENT SUCH AS MASS NOTIFICATION, FIRE ALARM, OR DDC EQUIPMENT SHALL NOT BE LOCATED IN THE COMMUNICATIONS ROOM. ANY PANELS OR EQUIPMENT OTHER THAN THOSE SHOWN ON THE PLANS SHALL BE LOCATED IN THE ELECTRICAL ROOM.

6. RECESSSED 6"X6"X6" J-BOX 24" AFF. WITH COVER PAINTED TO MATCH WALL. CONTINUE VIA 4" C BELOW SLAB TO BUILDING MOUNTED J-BOX OF NOTE 6. PROVIDE PROTECTIVE BUSHING ON INCOMING CONDUIT AND PULLSTRING.

7. SURFACE MOUNTED 12"X12"X6" NEMA 3R JUNCTION CABINET 3' AFG. PROVIDE PROTECTIVE BUSHING ON INCOMING CONDUIT, AND PROVIDE 4" NIPPLE OPENING ON BOTTOM OF BOX WITH PROTECTIVE BUSHING, PAINT TO MATCH WALL.

8. 4' X 6' SOLID CONCRETE PAD MIN 6" DEPTH ABOVE GRADE.

COMMUNICATION PLAN

SCALE 1/8" = 1'

US ARMY CORPS OF ENGINEERS
ALASKA DISTRICT

CONTRACT NO. _____
CONTRACTOR _____
CITY _____ STATE _____
PRIME CONTRACTOR _____
Recommended: _____
RESIDENT ENGINEER _____
Approved: _____
Date: _____

Sym	Action	Description	Date	Appvd

U.S. ARMY ENGINEER DISTRICT
CORPS OF ENGINEERS
ANCHORAGE, ALASKA

Designed: TH
Drawn: TH
Reviewed: R. Bolton
Submitted: D. Frenier
Date: 16 JULY 2009
Dwg Scale: AS NOTED
Plot Scale: 1:2
File: FTW336A-105-E3-04
Drawing No. F-211-13-01
INV. NO. W911KB-09-R-0007
PN 65076
FTW336A

FT. WAINWRIGHT, ALASKA
AIRCRAFT PARTS STORAGE
ELECTRICAL
PLANS
COMMUNICATION PLAN

Reference number:
E3.04
Sheet 105 of 118

NOT FOR CONSTRUCTION
BACKCHECK

Drawing x:\UNIFIED\EN-TE\Jobs\FTW336A\Dwgs\FTW336A-105-E3-04.dwg last saved on 7/16/2009 2:08 PM was plotted by Curfew, Donald L POA on 7/17/2009 6:56 AM

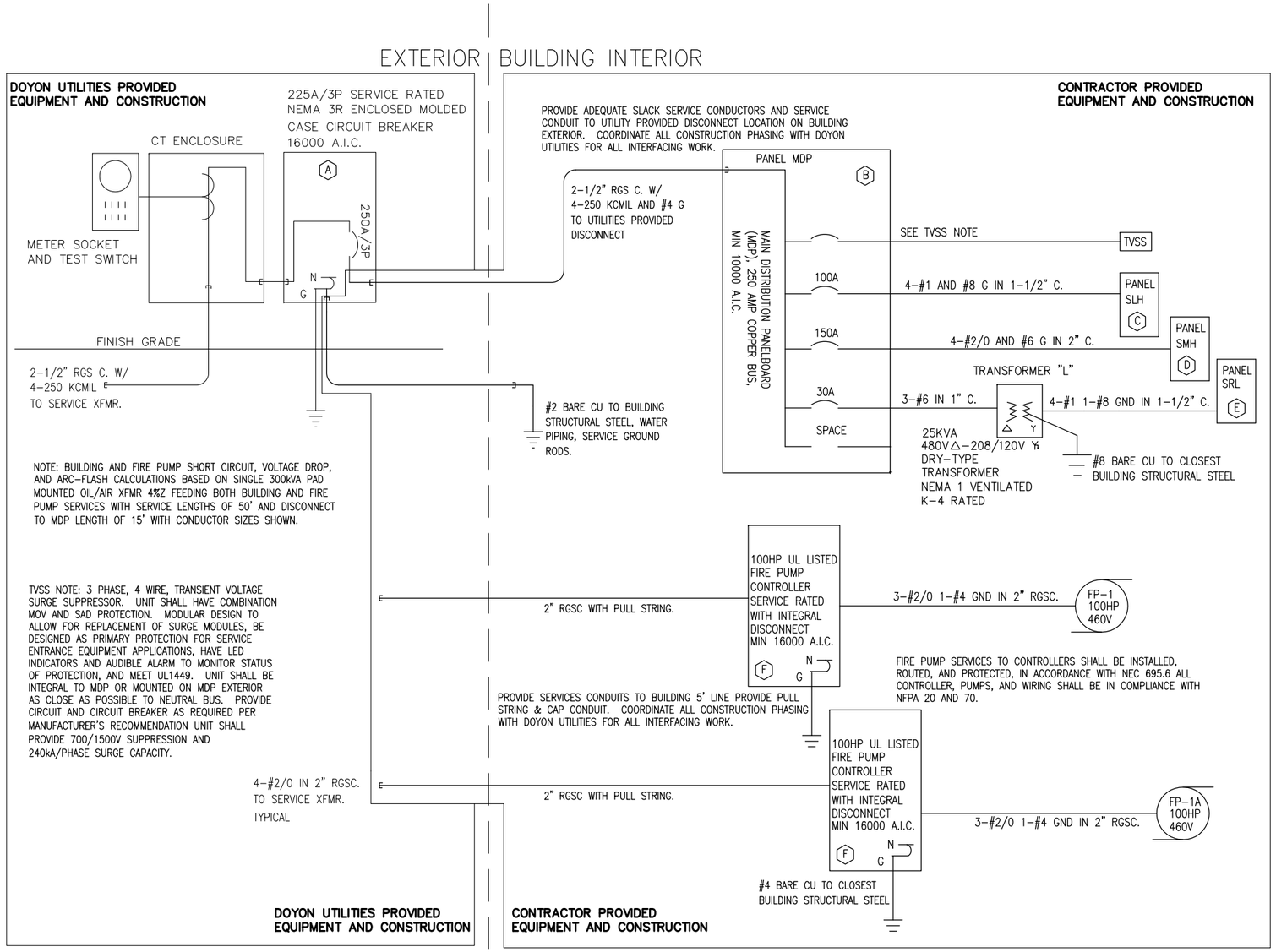

BUILDING POWER ONE-LINE DIAGRAM

NOT TO SCALE

WARNING

Arc Flash and Shock Hazard

Appropriate PPE Required

1227 mm	Flash Hazard Boundary
6.0 cal/cm^2	Flash Hazard at 457 mm
Category 2	Arc-rated FR Shirt & Pants
480 VAC	Shock Hazard when cover is removed
00	Glove Class
1067 mm	Limited Approach
305 mm	Restricted Approach
25 mm	Prohibited Approach
Location:	**BUS-FIRE**

(F)

WARNING

Arc Flash and Shock Hazard

Appropriate PPE Required

218 mm	Flash Hazard Boundary
0.35 cal/cm^2	Flash Hazard at 457 mm
Category 0	Nonmelting, Flammable Materials with Weight >= 4.5 oz/sq yd
480 VAC	Shock Hazard when cover is removed
00	Glove Class
1067 mm	Limited Approach
305 mm	Restricted Approach
25 mm	Prohibited Approach
Location:	**BUS-MAIN**

(A)

WARNING

Arc Flash and Shock Hazard

Appropriate PPE Required

209 mm	Flash Hazard Boundary
0.33 cal/cm^2	Flash Hazard at 457 mm
Category 0	Nonmelting, Flammable Materials with Weight >= 4.5 oz/sq yd
480 VAC	Shock Hazard when cover is removed
00	Glove Class
1067 mm	Limited Approach
305 mm	Restricted Approach
25 mm	Prohibited Approach
Location:	**BUS-SLH**

(C)

WARNING

Arc Flash and Shock Hazard

Appropriate PPE Required

209 mm	Flash Hazard Boundary
0.33 cal/cm^2	Flash Hazard at 457 mm
Category 0	Nonmelting, Flammable Materials with Weight >= 4.5 oz/sq yd
480 VAC	Shock Hazard when cover is removed
00	Glove Class
1067 mm	Limited Approach
305 mm	Restricted Approach
25 mm	Prohibited Approach
Location:	**BUS-SMH**

(D)

WARNING

Arc Flash and Shock Hazard

Appropriate PPE Required

59 mm	Flash Hazard Boundary
0.04 cal/cm^2	Flash Hazard at 457 mm
Category 0	Nonmelting, Flammable Materials with Weight >= 4.5 oz/sq yd
208 VAC	Shock Hazard when cover is removed
00	Glove Class
1067 mm	Limited Approach
Avoid Contact	Restricted Approach
Avoid Contact	Prohibited Approach
Location:	**BUS-SRL**

(E)

WARNING

Arc Flash and Shock Hazard

Appropriate PPE Required

215 mm	Flash Hazard Boundary
0.35 cal/cm^2	Flash Hazard at 457 mm
Category 0	Nonmelting, Flammable Materials with Weight >= 4.5 oz/sq yd
480 VAC	Shock Hazard when cover is removed
00	Glove Class
1067 mm	Limited Approach
305 mm	Restricted Approach
25 mm	Prohibited Approach
Location:	**PNL-MDP**

(B)

US ARMY CORPS OF ENGINEERS
ALASKA DISTRICT

CONTRACT NO. ___
CONTRACTOR ___
CITY ___ STATE ___
PRIME CONTRACTOR ___ Recommended: ___
RESIDENT ENGINEER ___ Approved: ___ Date: ___

Symb	Action	Description	Date	Appvd

U.S. ARMY ENGINEER DISTRICT
CORPS OF ENGINEERS
ANCHORAGE, ALASKA

Designed: TH
Drawn: TH
Reviewed: R. Bolton
Chief: ___ Section
Submitted: D. Fremer
Chief: ___ Branch
Date: 16 JULY 2009
Dwg Scale: AS NOTED
Plot Scale: 1:2
File: FTW336A-106-E4-01
Drawing #: F-211-13-01
INV. NO. W911KB-09-R-0007
PN 65076
FTW336A

FT. WAINWRIGHT, ALASKA
AIRCRAFT PARTS STORAGE
ELECTRICAL
PLANS
POWER SINGLE LINE DIAGRAM

Reference number:
E4.01
Sheet 106 of 118

NOT FOR CONSTRUCTION
BACKCHECK

Drawing x:\UNIFIED\EN-TE\Jobs\FTW336A\Dwgs\FTW336A-106-E4-01.dwg last saved on 6/19/2009 1:44 PM was plotted by Curfew, Donald L POA on 7/17/2009 6:56 AM

PANEL SRL

FEED: 208 V 3 Ø 4 W 60 HZ	MAIN LUG ONLY	RATING: 100A	10000 A.I.C.
ENCLOSURE: NEMA 1 SURFACE MOUNT	LOCATION: ELECTRICAL ROOM		

CKT No.	BREAKER PLS	BREAKER TRIP	LOAD DESCRIPTION	CONN KVA	A B C	CONN KVA	LOAD DESCRIPTION	BREAKER TRIP	BREAKER PLS	CKT No.
1	1	20	N BAY WALL	0.54	1 — 2	2.50	COMM UPS	30	2	2
3	1	20	PARTS RETURN	0.36	3 — 4	2.50				4
5	1	20	NE BAY WALL	0.64	5 — 6	0.50	COMM N WALL	20	1	6
7	1	20	NW BAY WALL	0.80	7 — 8	0.50	COMM E WALL	20	1	8
9	1	20	S BAY WALL	0.72	9 — 10	0.50	COMM W WALL	20	1	10
11	1	20	MECH/FIRE ROOMS	0.72	11 — 12	0.50	**MASS NOTIFICATION	20	1	12
13	1	20	MECH E WALL	0.64	13 — 14	0.72	OFFICE 107	20	1	14
15	1	20	SECURE STORAGE	0.90	15 — 16	0.54	BREAK ROOM/JANITOR	20	1	16
17	1	20	STOCK CNTRL OFFICE RADIO	0.50	17 — 18	1.00	REFER	20	1	18
19	1	20	STOCK CONTROL OFFICE	0.72	19 — 20	0.72	OFFICE 108	20	1	20
21	1	20	STOCK CONTROL/VESTIBULE	0.82	21 — 22	0.72	OFFICE 109	20	1	22
23	1	20	LOBBY	0.72	23 — 24	0.75	WATER FOUNTAIN	20	1	24
25	1	20	PRINTING W WALL	0.50	25 — 26	0.64	ELECT/RESTROOMS	20	1	26
27	1	20	PRINTING E WALL	0.50	27 — 28	0.64	OFFICE 110	20	1	28
29	1	20	PRINTER	1.00	29 — 30	0.54	W BAY WALL	20	1	30
31	1	20	OFFICE 106	0.54	31 — 32		SPARE	20	1	32
33			SPACE		33 — 34		SPARE	20	1	34
35	1	20	**FIRE PUMP CONTROLLER	0.25	35 — 36	0.50	**FIRE ALARM	20	1	36
37			SPACE		37 — 38		SPARE	20	1	38
39					39 — 40		SPARE	20	1	40
41					41 — 42	1.31	AC UNIT	20	1	42

	Ø A	Ø B	Ø C	TOTAL CONN. KVA
TOTAL CONN. KVA BOTH SIDES	8.82	8.20	8.93	25.95

REMARKS: RECEPTACLES 120/208V **COLOR AND LABEL PER NFPA 72

PANEL SMH

FEED: 480 V 3 Ø 4 W 60 HZ	MAIN LUG ONLY	RATING: 150A	10000 A.I.C.
ENCLOSURE: NEMA 1 SURFACE MOUNT	LOCATION: ELECTRICAL ROOM		

CKT No.	BREAKER PLS	BREAKER TRIP	LOAD DESCRIPTION	CONN KVA	A B C	CONN KVA	LOAD DESCRIPTION	BREAKER TRIP	BREAKER PLS	CKT No.
1	3	15	PUMP 1–2	0.94	1 — 2	2.11	ERV–1	20	3	2
3				0.94	3 — 4	2.11				4
5				0.94	5 — 6	2.11				6
7	3	15	PUMP 3–4, CP–1	1.38	7 — 8	2.11	ERV–1	20	3	8
9				1.38	9 — 10	2.11				10
11				1.38	11 — 12	2.11				12
13	3	25	CHARGER 1 CKT	5.15	13 — 14	1.20	ERV–2, ERV–3	15	3	14
15				5.15	15 — 16	1.20				16
17				5.15	17 — 18	1.20				18
19	3	25	CHARGER 2 CKT	5.15	19 — 20	1.16	DOORS N	15	3	20
21				5.15	21 — 22	1.16				22
23				5.15	23 — 24	1.16				24
25	3	25	LIFT 1 CKT	3.05	25 — 26	1.16	DOORS S	15	3	26
27				3.05	27 — 28	1.16				28
29				3.05	29 — 30	1.16				30
31	3	25	LIFT 2 CKT	3.05	31 — 32		SPARE	20	3	32
33				3.05	33 — 34					34
35				3.05	35 — 36					36
37	3	15	**FIRE JOCKEY PUMP	0.94	37 — 38		SPARE	20	3	38
39				0.94	39 — 40					40
41				0.94	41 — 42					42

	Ø A	Ø B	Ø C	TOTAL CONN. KVA
TOTAL CONN. KVA BOTH SIDES	27.40	27.40	27.40	82.20

REMARKS: MECH/EQUIPMENT 277/480V **COLOR AND LABEL PER NFPA 72

PANEL SLH

FEED: 480 V 3 Ø 4 W 60 HZ	MAIN LUG ONLY	RATING: 100A	10000 A.I.C.
ENCLOSURE: NEMA 1 SURFACE MOUNT	LOCATION: ELECTRICAL ROOM		

CKT No.	BREAKER PLS	BREAKER TRIP	LOAD DESCRIPTION	CONN KVA	A B C	CONN KVA	LOAD DESCRIPTION	BREAKER TRIP	BREAKER PLS	CKT No.
1	1	20	LIGHT CKT	2.97	1 — 2		SPARE	20	1	2
3	1	20	LIGHT CKT	1.24	3 — 4	1.66	EXTERIOR BUILDING LIGHTING	20	1	4
5	1	20	LIGHT CKT	1.58	5 — 6	0.95	YARD LIGHT CKT	20	1	6
7	1	20	LIGHT CKT	3.48	7 — 8		SPARE	20	1	8
9	1	20	LIGHT CKT	3.48	9 — 10		SPARE	20	1	10
11	1	20	LIGHT CKT	3.48	11 — 12	0.30	LIGHTING CONTROLS PANEL	20	1	12
13			SPACE		13 — 14		SPACE			14
15					15 — 16					16
17					17 — 18					18
19					19 — 20					20
21					21 — 22					22
23					23 — 24					24

	Ø A	Ø B	Ø C	TOTAL CONN. KVA
TOTAL CONN. KVA BOTH SIDES	6.45	6.38	6.31	19.14

REMARKS: LIGHTING 277V

PANEL HB1

FEED: 208 V 3 Ø 4 W 60 HZ	MAIN LUG ONLY	RATING: 150A	10000 A.I.C.
ENCLOSURE: NEMA 3R MOUNT	LOCATION: POST MOUNTED AT PARKING		

CKT No.	BREAKER PLS	BREAKER TRIP	LOAD DESCRIPTION	CONN KVA	A B C	CONN KVA	LOAD DESCRIPTION	BREAKER TRIP	BREAKER PLS	CKT No.
1	3	70	NORTH HBOS FEEDER	4.00	1 — 2		SPACE			2
3				4.00	3 — 4					4
5				7.00	5 — 6					6
7	3	70	SOUTH HBOS FEEDER	6.00	7 — 8					8
9				6.00	9 — 10					10
11				4.00	11 — 12					12

	Ø A	Ø B	Ø C	TOTAL CONN. KVA
TOTAL CONN. KVA BOTH SIDES	10.00	10.00	11.00	31.00

REMARKS:

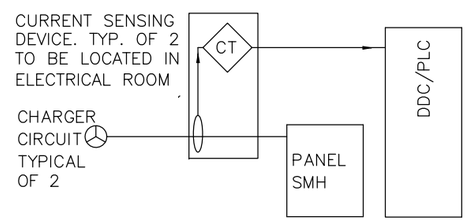

1. PROVIDE CURRENT SENSING OF THE THE TWO CHARGER CIRCUITS, PROVIDE REQUIRED CURRENT TRANSFORMERS, ENCLOSURES, TRANSFORMERS, AND ASSOCIATED WIRING AND CONDUIT TO PROVIDE "ON" SIGNAL TO DDC CONTROLS PANEL FOR FAN OPERATION. SEE MECHANICAL CONTROLS DRAWINGS AND SPECIFICATIONS.

CURRENT SENSING FOR BATTERY CHARGERS CIRCUITS

SCALE: NONE

NOT FOR CONSTRUCTION
BACKCHECK

US ARMY CORPS OF ENGINEERS
ALASKA DISTRICT

CONTRACT NO. _____
CONTRACTOR _____
CITY _____ STATE _____
PRIME CONTRACTOR _____
Recommended: _____
RESIDENT ENGINEER _____
Approved: _____
Date: _____

Symb	Action	Description	Date	Appvd

U.S. ARMY ENGINEER DISTRICT
CORPS OF ENGINEERS
ANCHORAGE, ALASKA

Designed: TH
Drawn: TH
Reviewed: R. Bolton
Chief – 639GA-DE-HE-ME – Section
Submitted: D. Frenier
Chief – 639GA-DE-HE-MEP – Branch
Date: 16 JULY 2009
Dwg Scale: AS NOTED
Plot Scale: 1:2
File: FTW336A-107-E4-02
Drawing: F-211-13-01

INV. NO. W911KB-09-R-0007
PN 65076
FTW336A

FT. WAINWRIGHT, ALASKA
AIRCRAFT PARTS STORAGE
ELECTRICAL
PLANS
POWER PANEL SCHEDULES

Reference number:
E4.02
Sheet 107 of 118

Drawing x:\UNIFIED\EN-TE\Jobs\FTW336A\Dwgs\FTW336A-107-E4-02.dwg last saved on 7/1/2009 1:33 PM was plotted by Curfew, Donald L POA on 7/17/2009 6:56 AM

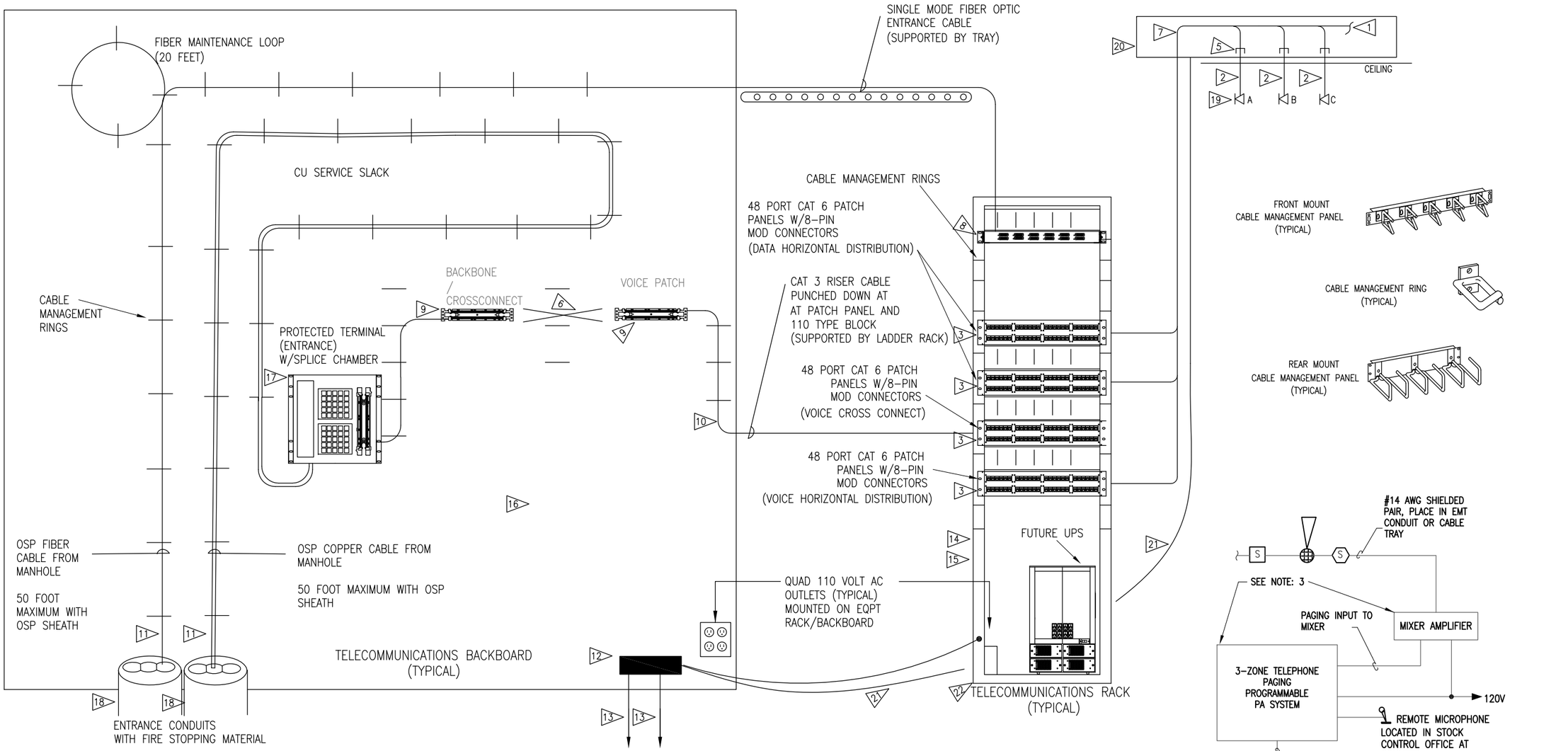

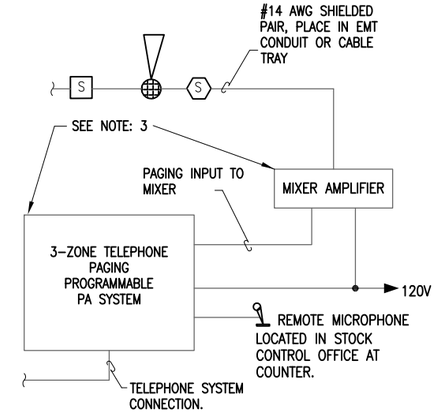

COMMUNICATION SYSTEM NOTES:

1. TO ADDITIONAL DEVICES – SEE FLOOR PLANS FOR QUANTITY AND LOCATION, PROVIDE AS REQUIRED.
2. PROVIDE CATEGORY 6 TELECOMM. CABLES, FOUR PAIR, 24 GAUGE COPPER TO DEVICES SHOWN ON FLOOR PLANS. TERMINATE ALL TELECOMM. CABLES EIA/TIA 568B. VERIFY ALL CABLES TEST TO CATEGORY EIA/TIA STANDARDS AND PROVIDE RESULTING TEST DATA TO OWNER'S REPRESENTATIVE.
3. CATEGORY 6, 48 PORT PATCH PANEL. BOTH DATA AND TELEPHONE OUTLETS SHALL LAND ON DATA PATCH PANELS
4. PROVIDE 100 PATCH CORDS (50–3 FEET AND 50–5 FEET IN LENGTH)
5. EMT CONDUIT FROM OUTLET BOX TO TRANSITION TO CABLE TRAY, SEE DETAIL E6.01.
6. FUTURE CROSS CONNECT.
7. ALL COMMUNICATION SYSTEM WIRING SHALL BE INSTALLED IN CABLE TRAYS, OR CONDUIT. INSTALL CABLE(S) IN CONDUIT – OR SURFACE RACEWAY WHERE CABLE(S) LEAVE THE TRAY AND ENTER A WALL CAVITY OR ARE EXPOSED SUSCEPTIBLE TO DAMAGE SHALL END ABOVE CABLE TRAY. MINIMUM CONDUIT SIZE SHALL BE 1".
8. 12 PORT OSP FIBER COMBINATION TERMINATION/PATCH PANEL WITH SC CONNECTORS AND FIBER MANAGEMENT.
9. 50 PAIR TYPE 110 RACK MOUNTED PUNCH DOWN BLOCKS.
10. 50 PAIR RISER CABLE
11. 50PR CU OSP CABLE AND 12 STRAND OSP FO CABLES
12. COPPER GROUNDING BUSS PER EIA/TIA
13. #6 CU TO BUILDING GROUNDING BUSS AND EXTERIOR GROUND ROD IN HANDHOLE.
14. PROVIDE 3 FEET OF CLEARANCE ON BOTH SIDES OF ALL RACKS.
15. 19" X 84" METAL RACK. COORDINATE LOCATION WITH CONTRACTING OFFICER FOR OWNERS PREFERED LOCATION IN ROOM.
16. 96" HEIGHT 3/4" FIRE RATED PLYWOOD BACKBOARD ON ALL WALLS OF COMM ROOM, PAINTED WITH 2-COATS WHITE NON-FLAMABLE PAINT.
17. 50 PAIR 66 BLOCK PROTECTED TERMINAL WITH GAS PROTECTORS.
18. 4" RGS CONDUIT. WITH 3" 3 CELL FABRIC INNERDUCT.
19. EACH OUTLET TO HAVE 2-EACH DATA AND ONE EACH VOICE JACKS ALL WIRED 4-PAIR CAT 6. PROVIDE MINIMUM 4-11/16" X 4-11/16" DOUBLE GANG J-BOX FOR EACH OUTLET.
20. CABLE TRAY.
21. #6 BARE CU GROUND, BOND TO CABLE TRAY, EACH INDIVIDUAL SECTION SHALL BE BONDED TOGETHER.
22. PROVIDE RACK WITH BASE ISOLATION KIT.

NOTES:

1. INITIALLY SPEAKERS SHALL BE TAPPED AT MINIMUM WATTAGE OR AS INDICATED ON DRAWINGS. SPEAKERS SHALL THEN BE ADJUSTED FOR BEST AUDIBILITY – APPROX. 10 dB ABOVE AMBIENT LEVEL.
2. ALL SPEAKERS SHALL BE COMPLETE INCLUDE LOUDSPEAKER, TRANSFORMER, BAFFLE AND BACKBOX. ZONE PER LOGICAL AREA MINIMUM ZONES: BAY AREA, INTERIOR AREA, EXTERIOR.
3. 19" RACK MOUNTED, SIZE PAGING PANEL AND AMPLIFIER(S) PER MANUFACTURES RECOMMENDATIONS FOR QUANTITY OF SPEAKERS SHOWN ON SIGNAL PLANS.

PAGING SYSTEM

TYPICAL: SCALE NONE

NOT FOR CONSTRUCTION
BACKCHECK

US ARMY CORPS OF ENGINEERS
ALASKA DISTRICT

CONTRACT NO. _____
CONTRACTOR _____
CITY _____ STATE _____
PRIME CONTRACTOR _____
Recommended: _____
RESIDENT ENGINEER _____
Approved: _____
Date: _____

Sym	Action	Description	Date	Appvd

U.S. ARMY ENGINEER DISTRICT
CORPS OF ENGINEERS
ANCHORAGE, ALASKA

Designed: TH
Drawn: TH
Reviewed: R. Bolton
Chief – CEPOA-EN-TE-ME Section
Submitted: D. Trenter
Chief – CEPOA-EN-CV-D Branch
Date: 16 JULY 2009
Dwg Scale: AS NOTED
Plot Scale: 1:2
File: FTW336A-108-E5-01
Drawing # F-211-13-01

PN 65076 INV. NO. W911KB-09-R-0007 FTW336A

FT. WAINWRIGHT, ALASKA
AIRCRAFT PARTS STORAGE
ELECTRICAL
PLANS
COMMUNICATIONS RISER DIAGRAMS

Reference number:
E5.01
Sheet 108 of 118

Drawing x:\UNIFIED\EN-TE\Jobs\FTW336A\Dwgs\FTW336A-108-E5-01.dwg last saved on 7/1/2009 11:52 AM was plotted by Curfew, Donald L POA on 7/17/2009 6:56 AM

1 AUTONOMOUS CONTROL UNIT:
UNIT SHALL COMPLY WITH UFC 4-021-01 AND SHALL FUNCTION INDEPENDENT OF THE EXISTING BASE-WIDE MASS NOTIFICATION CENTRAL CONTROL SYSTEM BUT SHALL BE ABLE TO INTERFACE AND COMMUNICATE WITH THE THE EXISTING BASE-WIDE CENTRAL CONTROL SYSTEM VIA WIRELESS RADIO TRANSMISSION. THE EXISTING POST-WIDE CENTRAL CONTROL SYSTEM WAS PROVIDED BY FEDERAL SIGNAL CORPORATION. THE SYSTEM USES FEDERAL SIGNAL'S FEDERAL COMMANDER DIGITAL SYSTEM SOFTWARE. TWO-WAY COMMUNICATION IS THROUGH FEDERAL SIGNAL'S MSK RADIO MODEM (USING MOTOROLA CDM750 RADIO TRANSCEIVERS).

SHALL FUNCTION INDEPENDENT OF THE FIRE ALARM SYSTEM BUT SHALL BE ABLE TO INTERFACE WITH THE FIRE ALARM SYSTEM. SHALL TEMPORARILY DEACTIVATE FIRE ALARM AUDIBLE NOTIFICATION (ONLY), OTHER FIRE ALARM FUNCTIONS SHALL NOT BE AFFECTED; THIS FEATURE SHALL FUNCTION ONLY WHEN THE FIRE ALARM SYSTEM IS IN ALARM CONDITION WHILE THE VOICE MESSAGE IS BEING TRANSMITTED. DEACTIVATION OF THE FIRE ALARM AUDIBLE NOTIFICATION SHALL CAUSE A SUPERVISORY SIGNAL IN THE FIRE ALARM SYSTEM WHICH SHALL BE SEPARATE SIGNAL FROM THE OTHER FIRE ALARM SUPERVISORY SIGNALS. THIS SIGNAL SHALL BE ANNUNCIATED IN THE FIRE ALARM PANEL AND ALSO TRANSMITTED TO THE CENTRAL REPORTING SYSTEM.

EMERGENCY RESPONDERS SHALL HAVE A READILY ACCESSIBLE MEANS TO MANUALLY OVERRIDE DEACTIVATION FUNCTION AND ENABLE FIRE ALARM AUDIBLE NOTIFICATION TO OPERATE INDEPENDENTLY. THIS FEATURE SHALL ALSO ACTIVATE A SUPERVISORY SIGNAL IN THE FIRE ALARM SYSTEM.

SHALL BE CAPABLE OF MONITORING INTEGRITY OF THE MASS NOTIFICATION APPLIANCE CIRCUIT SUCH AS STROBE, SPEAKER, & DISPLAY CIRCUIT; THE CONTROL PANEL CIRCUITRY, INTEGRITY OF MAIN AND STANDBY POWER SUPPLY. ANY TROUBLE SHALL ACTIVATE BOTH A VISUAL AND AUDIBLE SIGNAL ON THE PANEL.

SHALL BE CAPABLE OF STORING AT LEAST FOUR PRERECORDED MESSAGES AND SHALL HAVE THE ABILITY TO DELIVER THE MESSAGES QUICKLY & MESSAGES SHALL BE REPEATED AUTOMATICALLY UNTIL MANUALLY TERMINATED. THE CAPACITY OF STORED MESSAGES SHALL BE ABLE TO BE UPGRADED.

ENCLOSURE SHALL BE SECURED. SHALL HAVE A SECURED LOCAL OR REMOTE OPERATOR CONSOLE FOR INITIATING RECORDED MESSAGES OR ANNOUNCING LIVE MESSAGE, AND ACTIVATING OTHER NOTIFICATION APPLIANCES. MICROPHONE FOR ANNOUNCING LIVE MESSAGES SHALL BE SECURED.

SYSTEM CONFIGURATION, MONITORING, CONTROL SHALL BE EITHER LOCALLY THROUGH A COMPUTER PORT AT THE PANEL OR REMOTELY VIA THE BASE-WIDE CENTRAL CONTROL SYSTEM. SOFTWARE SHALL BE THE SAME OR COMPATIBLE WITH THE SOFTWARE USED IN THE BASE-WIDE CENTRAL CONTROL SYSTEM (FEDERAL COMMANDER DIGITAL SYSTEM SOFTWARE). SHALL HAVE LOCAL DIAGNOSTIC INFORMATION DISPLAY & SHALL HAVE LOG FILE FOR SYSTEM EVENTS AND DIAGNOSTIC INFORMATION.

2 NOTIFICATION APPLIANCE NETWORK:
THE SYSTEM SHALL SHALL COMPLY WITH UFC 4-021-01 AND USE MODULAR DISPLAYS AND SPEAKERS SUITABLE FOR INSTALLATION IN COMMERCIAL/INDUSTRIAL APPLICATIONS.

STROBES SHALL MEET VISUAL AND SYNCHRONIZATION REQUIREMENTS LISTED IN NFPA 72. STROBES FOR THE MASS NOTIFICATION SYSTEM SHALL NOT BE SHARED WITH THE FIRE ALARM SYSTEM AND SHALL BE UNMARKED.

AUDIBLE APPLIANCE SUCH AS SPEAKERS SHALL MEET THE AUDIBLE & INTELLIGIBILITY REQUIREMENTS LISTED IN NFPA 72. VERIFICATION OF INTELLIGIBILITY SHALL BE IN ACCORDANCE WITH IEC 60849.

LOCATION OF BOTH VISUAL AND AUDIBLE NOTIFICATION APPLIANCES SHALL BE IN ACCORDANCE WITH NFPA 72.

3 POWER SUPPLY:
POWER SHALL COMPLY WITH UFC 4-021-01

PRIMARY POWER SOURCE SHALL BE 120V AC, 60 HZ SUPPLIED FROM A DEDICATED BRANCH CIRCUIT & SHALL HAVE OVERCURRENT PROTECTIVE DEVICE & TRANSIENT SURGE PROTECTION. INCLUDE IN THE MASS NOTIFICATION PANEL LABEL THE PANELBOARD AND CIRCUIT ID SUPPLYING POWER TO THE SYSTEM.

SECONDARY (STANDBY) POWER SUPPLY OR AN UNINTERRUPTIBLE POWER SUPPLY (UPS) SHALL BE PROVIDED FOR ALL LOADS. WHEN THE PRIMARY SUPPLY FAILS TO PROVIDE THE MINIMUM VOLTAGE TO PROPERLY OPERATE THE SYSTEM THE SECONDARY POWER SUPPLY SHALL AUTOMATICALLY PROVIDE POWER TO THE SYSTEM WITHIN A MAXIMUM OF 10 SECONDS. THE SECONDARY POWER SHALL HAVE A CAPACITY TO OPERATE THE SYSTEM FOR A MINIMUM OF 72 HOURS UNDER NORMAL QUIESCENT LOAD (NO LIVE OR PREPROGRAMMED ANNOUNCEMENT). AFTER THIS PERIOD THE SECONDARY POWER SHALL HAVE ENOUGH CAPACITY TO OPERATE THE SYSTEM FOR A MINIMUM 15 MINUTES UNDER MAXIMUM LOAD. OPERATING ON SECONDARY POWER SHALL NOT AFFECT THE SYSTEMS PERFORMANCE, ALL FUNCTIONS AND FEATURES OF THE SYSTEM SHALL OPERATE NORMALLY.

AUTOMATIC CHARGER SHALL BE PROVIDED INTEGRAL WITH THE SECONDARY POWER. THE CHARGER SHALL FULLY CHARGE THE BATTERY WITHIN 48 HOURS AFTER A SINGLE DISCHARGE CYCLE. THE NOTIFICATION PANEL SHALL MONITOR AND SUPERVISE THE CHARGING SYSTEM.

OTHER GENERAL REQUIREMENT:
SYSTEM SHALL COMPLY WITH UFC 4-021-01 AND COMPONENTS USED IN THE SYSTEM SHALL BE COMMERCIAL OFF THE SHELF.

SYSTEM SHALL BE FAULT-TOLERANT WITH REDUNDANCY PROVIDED FOR MAJOR COMPONENTS.

ANY HARDWARE AND SOFTWARE MODIFICATION NEEDED ON THE POST-WIDE CENTRAL CONTROL SYSTEM FOR BOTH SYSTEMS TO INTERFACE AND COMMUNICATE SHALL BE PART OF THIS CONTRACT.

FOR SPECIFICS ON THE EXISTING MASS NOTIFICATION SYSTEM POST-WIDE CENTRAL CONTROL SYSTEM CONTACT USARAK FORCE PROTECTION OFFICER OR FEDERAL SIGNAL CORPORATION.

MASS NOTIFICATION MATRIX

Legend: O=Mandatory sequence	System output:	Transmit Supervisory alarm to Emergency Forces	Transmit Trouble Alarm to Emergency Forces	Activate visible and audible supervisory annunciator	Activate visible and audible trouble annunciator	Activate all occupant notification appliances	Initiation devices and occupant notification appliances operation maintained	Deactivate manual mass notification appliance override. Allow fire alarm system to activate all occupant notification appliances and operate normally.	Temporarily and immediately deactivate all fire alarm occupant notification appliances sounding evacuation alarm
System Input:									
Single break or single ground fault in notification circuit			O		O		O		
Mass notification system manual fire alarm occupant notification appliance override*		O		O					O
Army projects: Deactivate Mass notification system override **								O	
Local or Remote System Delivering Message						O			O

NOTES:

1. Provide other operations in accordance with UFC 4-021-01 and and Contract documents.
3. This sequence of operations are considered to be minimum.

* The switch for the manual override of the fire alarm evacuation occupant notification appliances shall be located at the bldg mass notification system autonomous control unit and shall be labeled with an ID plate: "Fire alarm system override"
Designer may add input/output with approved coordination with the Authority Having Jurisdiction.
**For Army projects, another switch to deactivate the manual override and allow the occupant notification appliances to continue to sound shall be located at the fire alarm panel and shall be labeled with a permanent ID plate: "Mass Notify Override Deactivation"

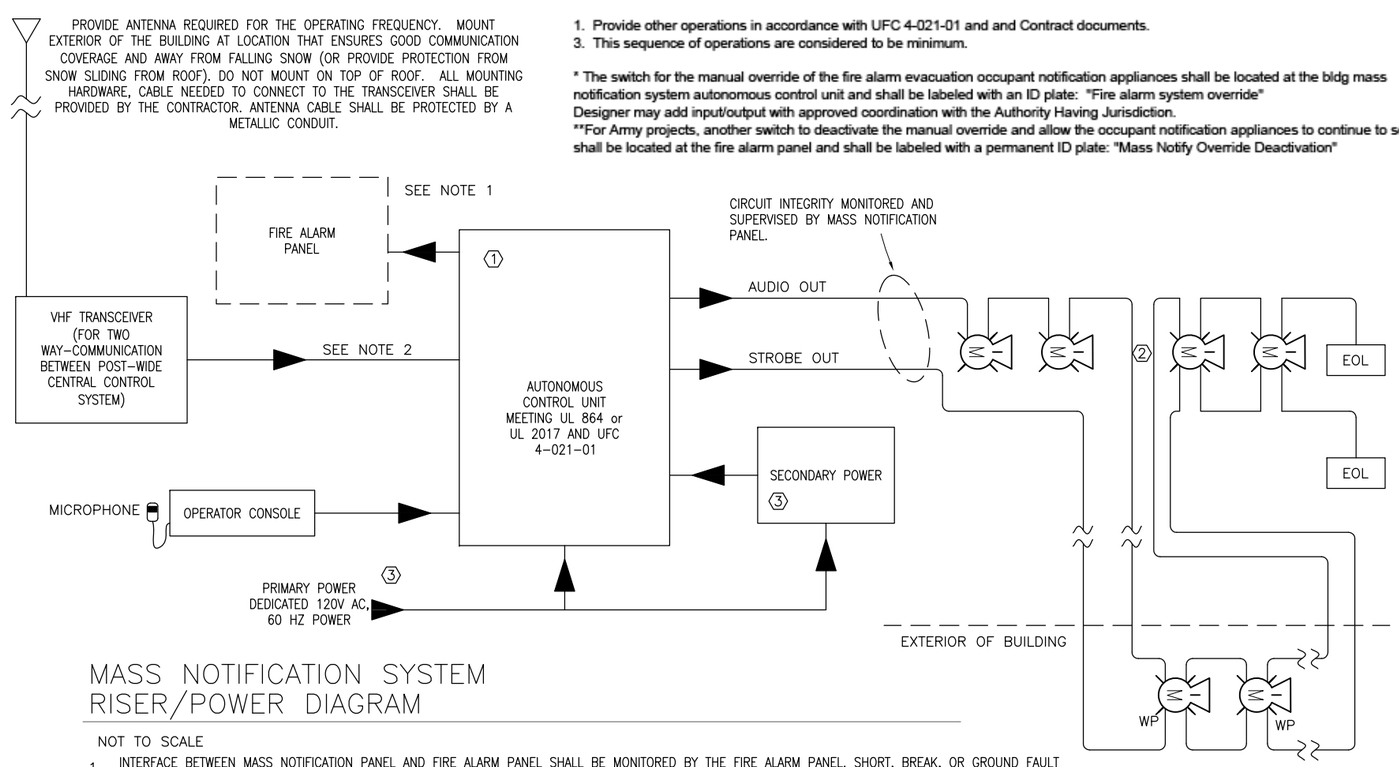

MASS NOTIFICATION SYSTEM RISER/POWER DIAGRAM

NOT TO SCALE

1. INTERFACE BETWEEN MASS NOTIFICATION PANEL AND FIRE ALARM PANEL SHALL BE MONITORED BY THE FIRE ALARM PANEL. SHORT, BREAK, OR GROUND FAULT ON THE LINE SHALL ACTIVATE A TROUBLE ALARM AND BE ANNUNCIATED ON THE FIRE ALARM PANEL. COORDINATE WITH INSTALLATION OF FIRE ALARM SYSTEM.
2. TRANSCEIVER MAYBE INTEGRAL TO THE CONTROL UNIT OR SEPARATE FROM THE CONTROL UNIT. IF SEPARATE FROM THE CONTROL UNIT, MANUFACTURER RECOMMENDED CABLE RUN IN A DEDICATED METAL CONDUIT SHALL BE PROVIDED TO CONNECT THE TRANSCEIVER TO THE CONTROL UNIT.
3. ALL CONDUCTORS FOR THE MASS NOTIFICATION SYSTEM SHALL BE RUN IN SEPARATE METALLIC CONDUITS. DO NOT USE CONDUITS FOR THE FIRE ALARM CIRCUIT OR THE CABLE TRAY FOR THE VOICE/DATA NETWORK.

NOT FOR CONSTRUCTION
BACKCHECK

US ARMY CORPS OF ENGINEERS
ALASKA DISTRICT

CONTRACT NO. ___
CONTRACTOR ___
CITY ___ STATE ___
PRIME CONTRACTOR ___ Recommended: ___
RESIDENT ENGINEER ___ Approved: ___ Date: ___

Symb	Action	Description	Date	Appvd

U.S. ARMY ENGINEER DISTRICT
CORPS OF ENGINEERS
ANCHORAGE, ALASKA

Designed: T.H.
Drawn: T.H.
Reviewed: R. Bolton
Chief: ___ Section
Submitted: D. Frenier
Chief: ___ Branch
Date: 16 JULY 2009
Dwg Scale: AS NOTED
Plot Scale: 1:2
File: FTW336A-109-E5-02
Drawing: H-F-211-13-01

INV. NO. W911KB-09-R-0007
PN 65076
FTW336A

FT. WAINWRIGHT, ALASKA
AIRCRAFT PARTS STORAGE
ELECTRICAL
PLANS
MASS NOTIFICATION SYSTEM

Reference number:
E5.02
Sheet 109 of 118

Drawing x:\UNIFIED\EN-TE\Jobs\FTW336A\Dwgs\FTW336A-109-E5-02.dwg last saved on 6/19/2009 10:18 AM was plotted by Curfew, Donald L POA on 7/17/2009 6:56 AM

NOTE:

1. TERMINAL AND OUTLET BOXES TO BE MOUNTED ON SIDE OF POST AWAY FROM TRAFFIC WHERE-EVER POSSIBLE TO PREVENT DAMAGE.
2. POST SHALL NOT BE ENCASED IN CONCRETE (SEE DETAIL)
3. OUTLETS SHALL BE INTELLIGENT PARKING LOT CONTROLLERS (IPLC) WITH INTEGRAL DUPLEX RECEPTACLE AND COVER, MICROPROCESSOR AND TEMPERATURE SENSOR TO REGULATE POWER TO THE OUTLET BASED ON TEMPERATURE AND PROGRAMMING. VANTERA INC. IPLC OR EQUAL.
4. ALTERNATE PHASE CONNECTION PER PLAN.

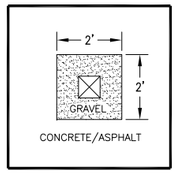

TYPICAL POST PLAN DETAIL

DOYON UTILITIES WILL PROVIDE METERING, SERVICE, AND SERVICE DISCONNECT AND GROUNDING NOT SHOWN ON THIS DETAIL.

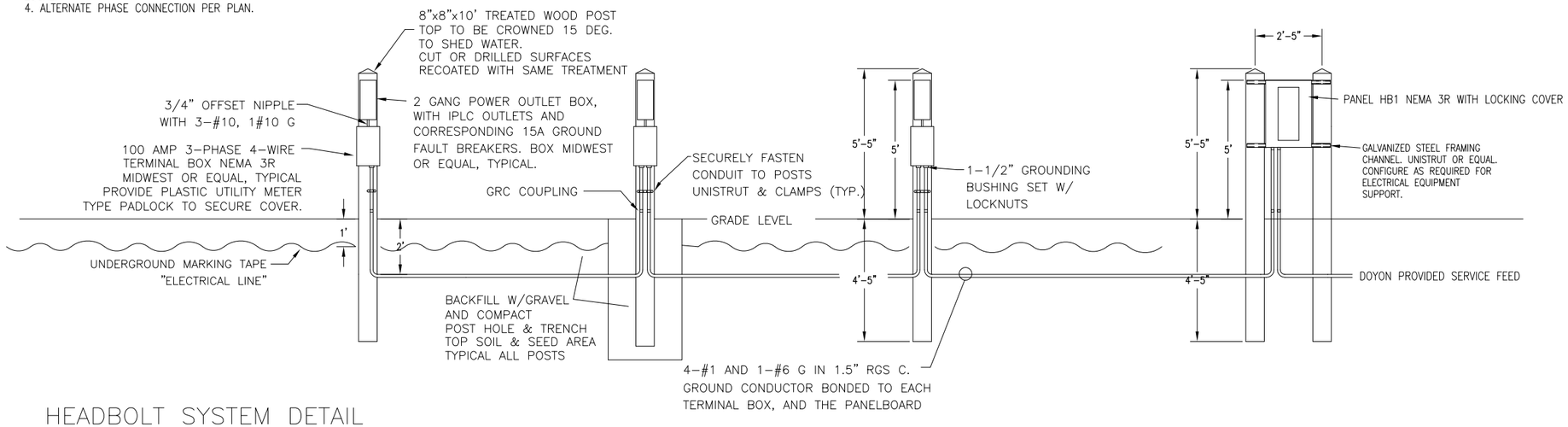

HEADBOLT SYSTEM DETAIL

SCALE: NONE

DETAIL NOTES:

1. EACH DEVICE PLATE SHALL BE 4 PORT MINIMUM. LAYOUT DEVICE PLATE PER LEGEND AND AS INDICATED ON DRAWINGS. TYPICAL DEVICE LAYOUT SHOWN.
2. DATA: TERMINATE EACH CAT 6 CABLE ON RJ-45 CAT 6 RATED JACK.
3. PHONE/VOICE: TERMINATE EACH CAT 6 CABLE ON RJ-45 CAT 6 RATED JACK
4. PROVIDE LABEL DENOTING STATION NUMBER, COMM ROOM AND PATCH PANEL SOURCE LOCATION.
5. ALL LABELS SHALL BE PRINTED WITH THERMAL OR LASER PRINTER SYSTEMS.

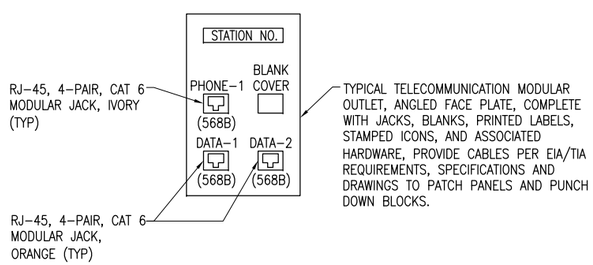

WALL MOUNTED COMMUNICATIONS OUTLET (TYP)

NO SCALE

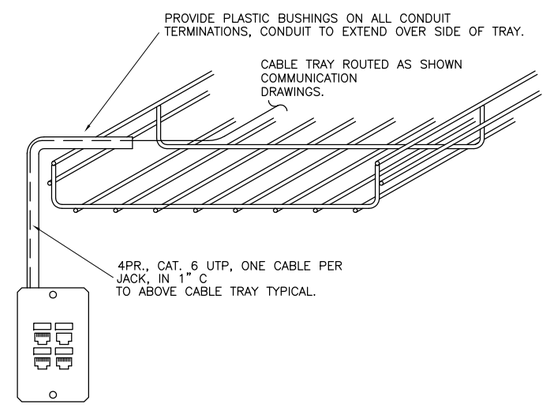

CONDUIT TO WIRE TRAY DETAIL

TYPICAL: SCALE NONE

NOT FOR CONSTRUCTION

BACKCHECK

US ARMY CORPS OF ENGINEERS
ALASKA DISTRICT

CONTRACT NO. ___
CONTRACTOR ___
CITY ___ STATE ___
PRIME CONTRACTOR ___ Recommended: ___
RESIDENT ENGINEER ___ Approved: ___ Date: ___

Symb	Action	Description	Date	Appvd

U.S. ARMY ENGINEER DISTRICT
CORPS OF ENGINEERS
ANCHORAGE, ALASKA

Designed: TH
Drawn: TH
Reviewed: R. Bolton
Chief ___ GPGA-Elc-E-MF ___ Section
Submitted: D. Trenier
Chief ___ GPGA-Elc-E ___ Branch
Date: 16 JULY 2009
Dwg Scale: AS NOTED
Plot Scale: 1:2
File: FTW336A-110-E6-01
Drawing # F-211-13-01

INV. NO. W911KB-09-R-0007
PN 65076
FTW336A

FT. WAINWRIGHT, ALASKA
AIRCRAFT PARTS STORAGE
ELECTRICAL
DETAILS
DETAILS 1

Reference number:
E6.01

Drawing x:\UNIFIED\EN-TE\Jobs\FTW336A\Dwgs\FTW336A-110-E6-01.dwg last saved on 7/1/2009 1:33 PM was plotted by Curfew, Donald L POA on 7/17/2009 6:56 AM

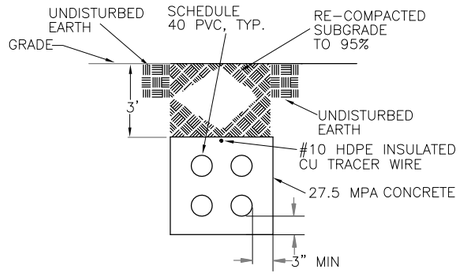

CONDUIT NON-ROADWAY TRENCH-SECTION

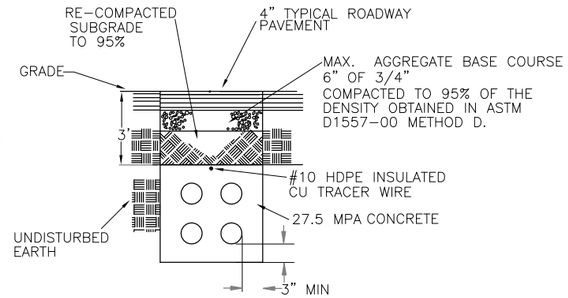

CONDUIT ROADWAY TRENCH-PAVEMENT SECTION

ADJUST ACCORDINGLY FOR 2-WAY BANK, 2-WAY BANK MAY BE ORIENTATED HORIZONTALLY OR VERTICALLY.

A — NEW COMM DUCTBANK

E2.01 | E6.02

SCALE: NONE

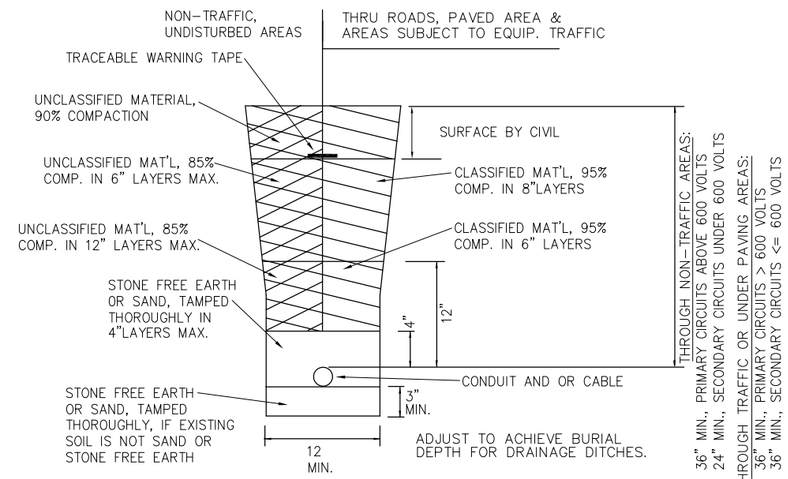

C — POWER AND LIGHTING TRENCH

E2.01 | E6.02

SCALE: NONE

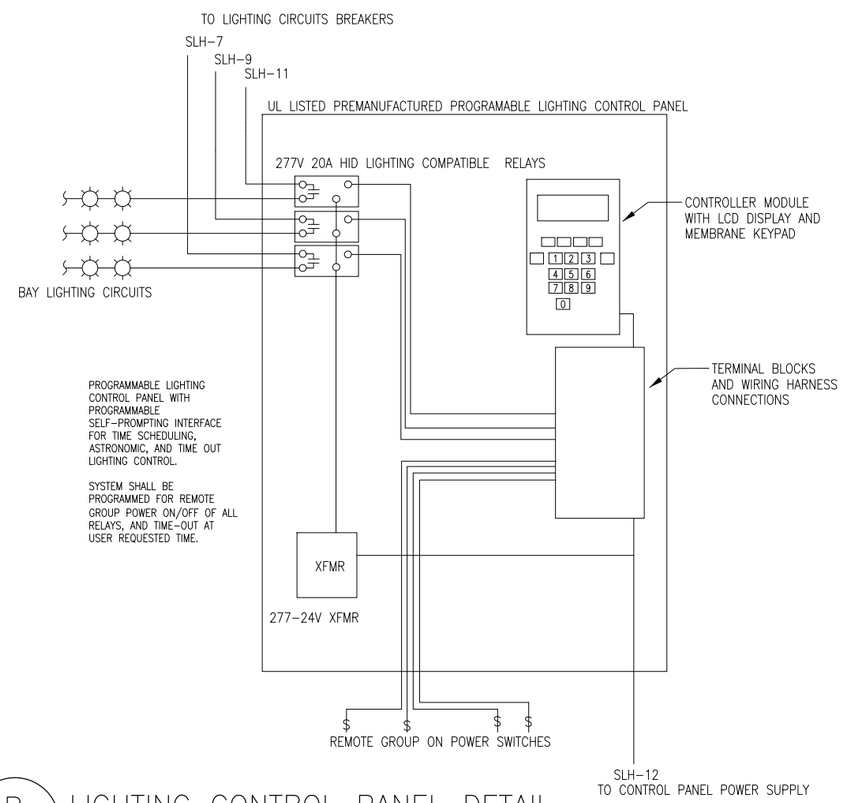

B — LIGHTING CONTROL PANEL DETAIL

E3.01 | E6.02

NOT TO SCALE

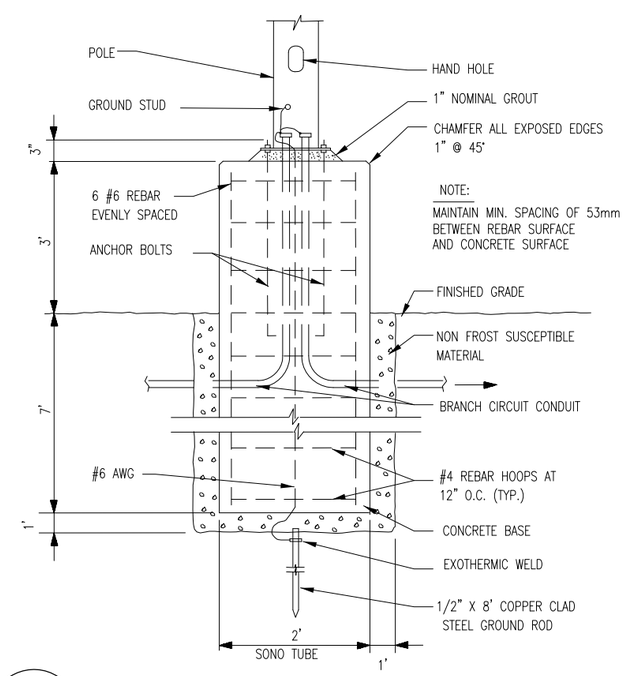

D — LIGHT POLE BASE DETAIL

E2.01 | E6.02

NOT TO SCALE

NOT FOR CONSTRUCTION

BACKCHECK

US ARMY CORPS OF ENGINEERS
ALASKA DISTRICT

CONTRACT NO. ___
CONTRACTOR ___
CITY ___ STATE ___
PRIME CONTRACTOR ___
Recommended: ___
RESIDENT ENGINEER ___
Approved: ___
Date: ___

Dwg Action	Description	Date	Appvd

U.S. ARMY ENGINEER DISTRICT
CORPS OF ENGINEERS
ANCHORAGE, ALASKA

Designed: T.H.
Drawn: T.H.
Reviewed: R. Bolton
Chief - Section
Submitted: D. Frener
Chief - Branch
Date: 16 JULY 2009
Dwg Scale: AS NOTED
Plot Scale: 1:2
File: FTW336A_111-E6-02
Drawing #: F-211-13-01

PN 65076
INV. NO. W911KB-09-R-0007
FTW336A

FT. WAINWRIGHT, ALASKA
AIRCRAFT PARTS STORAGE
ELECTRICAL
DETAILS
DETAILS 2

Reference number:
E6.02

Drawing x:\UNIFIED\EN-TE\Jobs\FTW336A\Dwgs\FTW336A-111-E6-02.dwg last saved on 7/8/2009 2:39 PM was plotted by Curfew, Donald L POA on 7/17/2009 6:56 AM

INTERMEDIATE CONCRETE MANHOLE HARDWARE & NOTES: PROVIDE

A. (12) EACH EMBEDDED GALVANIZED "C" CHANNEL

B. (8) EACH 66 INCH/44 HOLE GALVANIZED CUT RACKING

C. (24) EACH GALVANIZED "S" CABLE RACK BRACKETS (3.75" X 3.5" X 3")

D. (24) EACH PLATED SPRING NUTS AND CAP SCREWS ($\frac{1}{2}$" NUT, $\frac{1}{2}$" X $1\frac{1}{4}$" BOLT)

E. (12) EACH 7.5 INCH GALVANIZED CABLE SUPPORT ARMS (HOOKS).

F. (2) 12 INCH GRADE RINGS, RAM NECK SEAM SEALER AND BOLT-ON MANHOLE STEP GALVANIZED (3/4" X 16"), STENCIL MANHOLE NUMBER ON INSIDE OF GRADE RING WITH 4 INCH BLACK SPRAY.

G. MANHOLE CAST IRON FRAME NOMINAL – 49 INCH DIAMETER, 5 5/8" INCH RISE, 32 INCH DIAMETER OPENING, 30 INCH CLEAR OPENING. CONCRETE MANHOLE OPENING – 42 INCHE DIAMETER. CAST IRON COVER 30 INCHE DIAMETER X 1 3/8", WITH "COMMUNICATIONS" LETTERING MACHINE STAMPED IN COVER.

H. GALVANIZED HOOK LADDER WITH RUNGS ON 14 INCH CENTER, SIDE RAIL LENGTH SHALL FIT STANDARD MANHOLE WITH GRADE RING.

I. A SUMP SHALL BE CAST INTO THE FLOOR OF THE MANHOLE. THE FLOOR SHALL SLOPE TOWARD THE SUMP TO PROVIDE DRAINAGE FROM ALL AREAS OF THE MANHOLE INTO THE SUMP. THE SUMP SHALL BE APPROXIMATELY 13 INCHES IN DIAMETER, NOT LESS THAN 10 INCHES DIA., AND A MIMIMUM OF 4 INCHES DEEP AND COVERED WITH A REMOVABLE PERFORATED HIGH IMPACT PLASTIC OR PUNCHED-STEEL PLATE TO PERMIT DRAINAGE. THE COVER SHALL BE FLUSH WITH THE FLOOR.

J. (4) CABLE PULLING IRONS SHALL BE INSTALLED AT THE LOVER FLOOR/WALL OPPOSITE EACH MAIN CONDUIT ENTRANCE, LOCATION PLACED AND EMEDDED DURING THE CONSTRUCTION OF THE MANHOLE FLOORS/WALLS AND LOCATED 6 TO 9 INCHES FROM THE WALL OF THE MANHOLE, IN LINE WITH DUCT ENTRANCES (FOR EQUIPMENT SETUP AND CABLING PULLING PURPOSES.

K. A ONE INCH GROUND ROD HOLE SHALL BE PROVIDED IN ONE CORNER OF THE MANHOLE, PLACED NOT MORE THAN 4 INCHES NOR LESS THAN 2 INCHES OUT FROM THE VERTICAL SURFACE OF THE ADJACENT WALL. A 5/8 INCH X 8 FOOT COPPER CLADDED GROUND ROD SHALL BE INSTALLED IN THE FLOOR OF THE MANHOLE AND EXTENDING IN THE EARTH, FOUR INCHES OF THE ROD, PLUS OR MINUS 1/2 INCH SHALL EXTEND ABOVE THE FINISHED FLOOR LEVEL.

L. EACH MANHOLE SHALL HAVE AN IMBEDDED GROUND RIBBON, AND SHALL HAVE A GROUND LUG ACCESS POINT. A SURFACE SECURED GROUND RIBBON (ELECTRIC MOTION) SHALL BE PROVIDED AND TIED TOGETHER WITH A MECHANICAL, CLADDED SPLIT BOLT. THE GROUND SHALL BE EXTENDED TO AND SURFACE SECURED TO THE FLOOR GROUND ROD USING A MINIMUM # 6 SOLID GROUND WIRE AND MECHANICAL GROUND ROD CLAMP.

M. TERM-A-DUCT (DUCT TERMINATORS) ENTRANCES SHALL BE PROVIDED AS SHOWN. ALL TERMINATORS SHALL BE FACTORY INSTALLED. DUCTS SHALL SPLAY TO THE LOWER ENTRANCE TERMINATORS FIRST DURING INSTALLATION FOR EXPANSION ACCESS PURPOSES. VACANT DUCT ENTRANCES SHALL BE PLUGGED WITH A GALVANIZED GASKETED PRESSURE PLUG. ALL VACANT DUCTS SHALL HAVE MULE TAPE PULL CORD FOR EXTERIOR USE.

N. SPECIAL CONSIDERATIONS SHALL BE TAKEN TO AVOID DRAINAGE TO THE MANHOLE, I.E. IN GREEN AREAS PLACE FINISHED MANHOLE WITH FRAME AND COVER 4 INCHES ABOVE FINISHED GRADE AND SLOPE LANDSCAPE 360 DEGREES, 15 FEET OUT FROM HOLE ENTRANCE. IN ROAD SHOULDERS OR ASPHALTED AREAS FRAME AND COVER SHALL BE SET 1/2 INCH BELOW FINISH ASPHALT. ASPHALT DRAINAGE SHALL NOT DRAIN TO MANHOLE. MANHOLE PLACEMENT SHALL BE COORDINATED WITH OTHER DISCIPLINES, AND SHALL NOT BE PLACED IN DRAINAGE DITCHES.

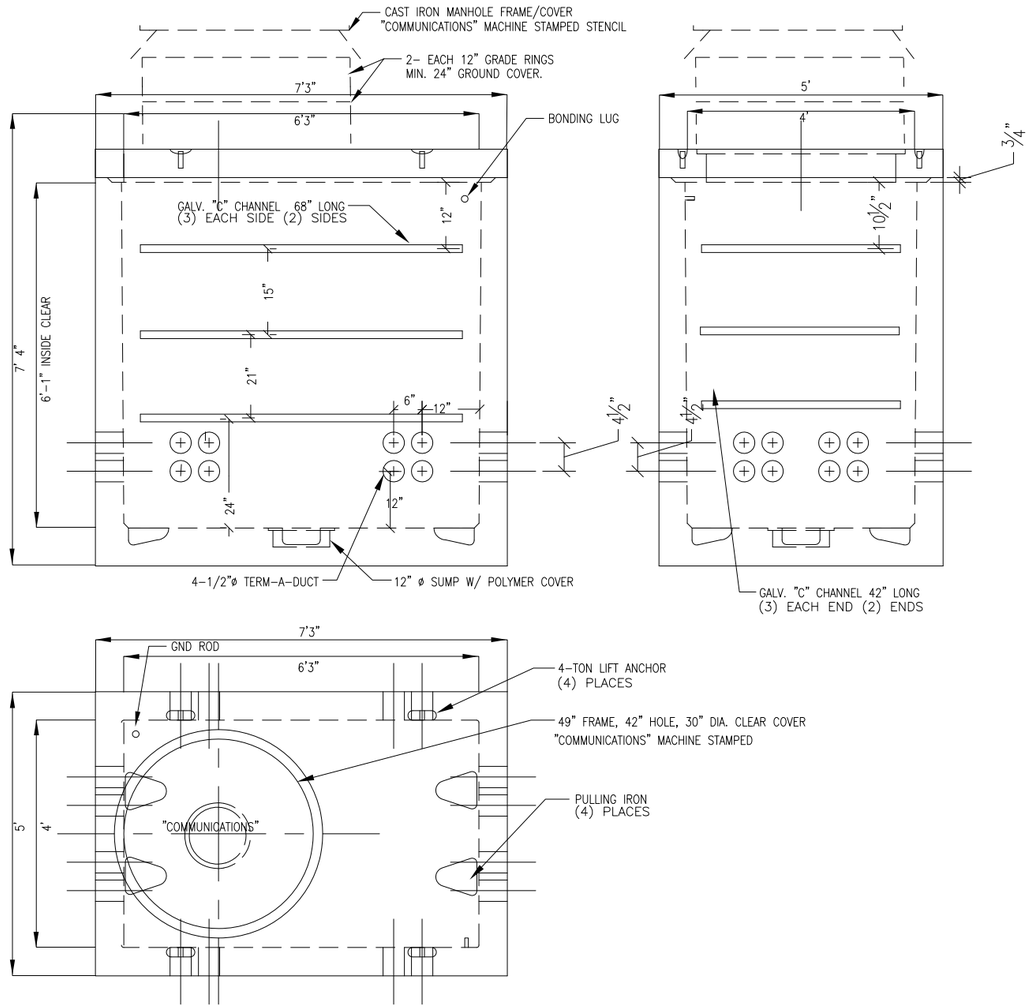

B E2.01 E6.03 MAN HOLE DETAIL

NOT TO SCALE

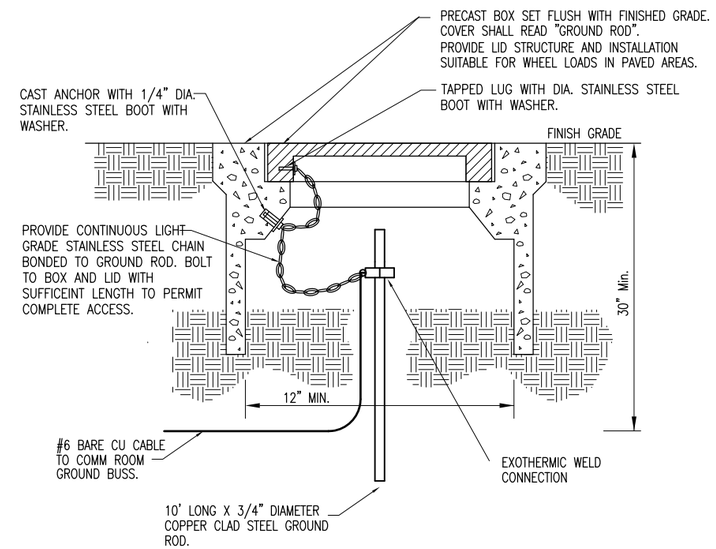

C E3.04 E6.03 GROUND ROD HANDHOLE DETAIL

NOT TO SCALE

NOT FOR CONSTRUCTION

BACKCHECK

US ARMY CORPS OF ENGINEERS
ALASKA DISTRICT

CONTRACT NO. ___
CONTRACTOR ___
CITY ___ STATE ___
PRIME CONTRACTOR ___
Recommended: ___
RESIDENT ENGINEER ___
Approved: ___
Date: ___

Symb	Action	Description	Date	Appvd

U.S. ARMY ENGINEER DISTRICT
CORPS OF ENGINEERS
ANCHORAGE, ALASKA

Designed: T.H.
Drawn: T.H.
Reviewed: R. Bolton
Chief – CZ/Civil-E/E-MI – Section
Submitted: D. Frenier
Chief – Design Branch
Date: 16 JULY 2009
Dwg Scale: AS NOTED
Plot Scale: 1:2
File: FTW336A-112-E6-03
Drawing # F-2211-13-01

INV. NO. W911KB-09-R-0007
PN 65076
FTW336A

FT. WAINWRIGHT, ALASKA
AIRCRAFT PARTS STORAGE
ELECTRICAL
DETAILS
DETAILS 3

Reference number:
E6.03

Drawing x:\UNIFIED\EN-TE\Jobs\FTW336A\Dwgs\FTW336A-112-E6-03.dwg last saved on 7/9/2009 1:13 PM was plotted by Curfew, Donald L POA on 7/17/2009 6:57 AM

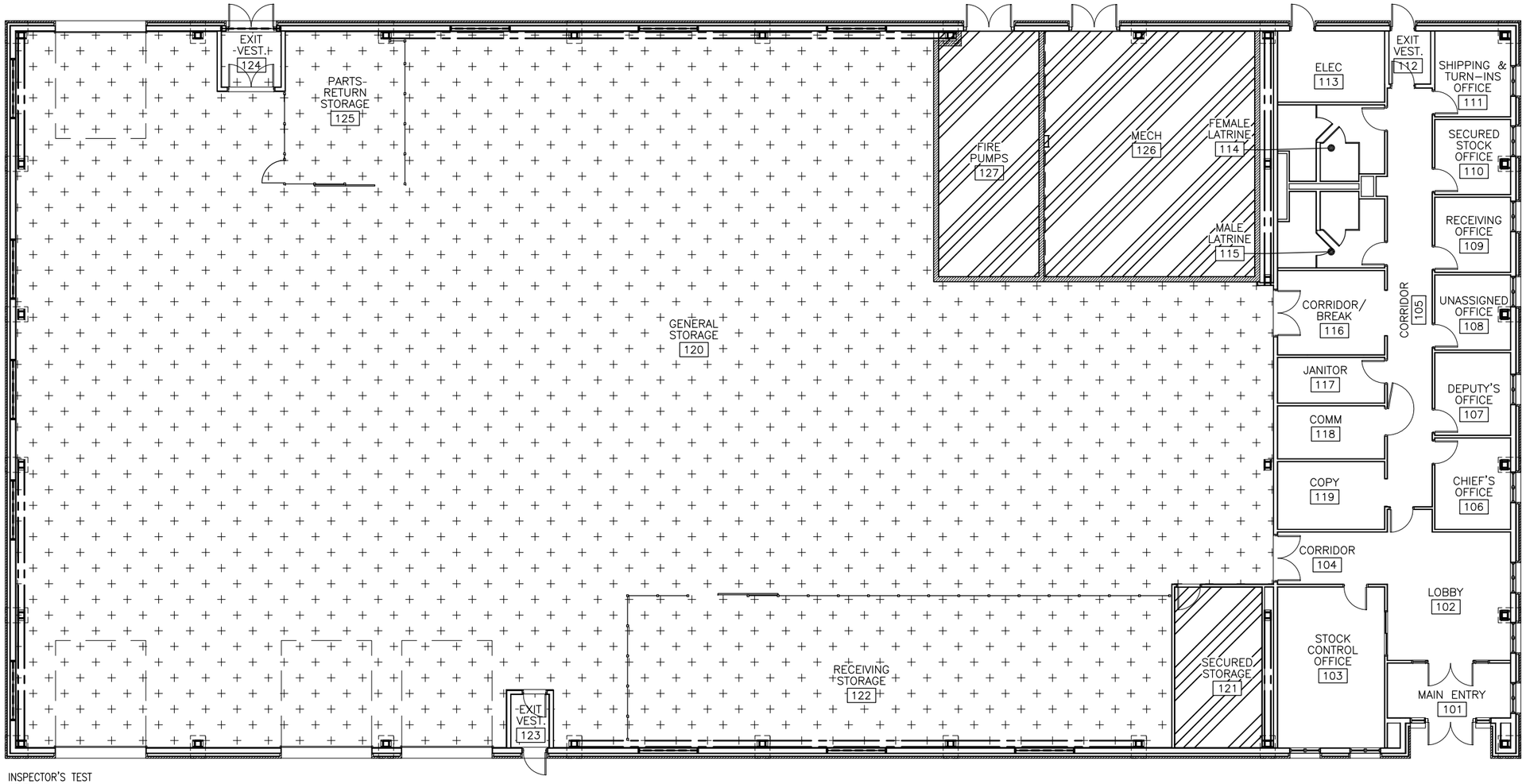

1 FP1.01 FP1.01 FIRE PROTECTION PLAN

SCALE: 1/8"=1'-0"

0 5' 10'

LEGEND

- LIGHT HAZARD
- ORDINARY HAZARD GROUP 1
- EXTRA HAZARD GROUP 1

DESIGN DENSITY

HAZARD	GPM PER SQ. FT.	AREA (SQ. FT.)	HOSE STREAM
LIGHT	0.10	1800	250
ORD. HAZARD GROUP 1	0.15	3000	500
EXTRA HAZARD GROUP 1	0.30	3900	500

ALL SPRINKLERS IN LIGHT HAZARD AREA SHALL BE QUICK RESPONSE TYPE. DESIGN AREAS SHOWN HAVE BEEN MODIFIED IN ACCORDANCE WITH NFPA 13 CRITERIA FOR SLOPED CEILINGS AND QUICK RESPONSE SPRINKLERS

HYDRANT FLOW DATA:

TEST HYDRANT H6-3-1F,
STATIC PRESSURE: 66 PSI
RESIDUAL PRESSURE: 56 PSI
FLOW: 934 GPM AT HYDRANT H6-3-2FHE
CONTRACTOR SHALL VERIFY HYDRANT FLOW DATA PRIOR TO SPRINKLER SYSTEM DESIGN.
TEST HYDRANT LOCATION SHOWN ON SHEET C1.01

NOTES:

1. THE CONTRACTOR SHALL DESIGN AND INSTALL A COMPLETE WET PIPE SPRINKLER SYSTEM AS INDICATED. THE SYSTEM SHALL INCLUDE FIRE DEPARTMENT CONNECTIONS, PIPING, VALVES, SUPPORTS, SEISMIC PROTECTION AND ALL OTHER APPURTENANCES FOR A COMPLETE AND OPERABLE SYSTEM.
2. ALL EQUIPMENT AND ACCESSORIES SHALL BE UL LISTED OR FM APPROVED AND SHALL BE INSTALLED IN ACCORDANCE WITH THE MANUFACTURER'S INSTRUCTIONS.
3. THE COMPLETE SPRINKLER SYSTEM SHALL BE DESIGNED AND INSTALLED IN ACCORDANCE WITH NFPA 13 2007 EXCEPT AS MODIFIED BY THE CONTRACT PLANS AND SPECIFICATIONS.
4. THE SPRINKLER SYSTEM SHALL BE HYDRAULICALLY DESIGNED TO THE CRITERIA PROVIDED IN THE CONTRACT. HYDRAULIC CALCULATIONS WILL INCLUDE A 10 PERCENT SAFETY FACTOR.
5. THE PIPING SHOWN ON THESE DRAWINGS IS CONCEPTUAL. SIZING AND LAYOUT WILL BE DETERMINED BY THE CONTRACTOR BASED ON THE HYDRAULIC CALCULATIONS.
6. EXPOSED SPRINKLERS IN FINISHED AREAS SHALL BE WHITE WITH WHITE ESCUTCHEONS.
7. SPRINKLERS IN MECHANICAL ROOMS AND JANITORS CLOSET BELOW 8 FEET SHALL BE PROTECTED WITH SPRINKLER GUARDS.
8. SPRINKLERS IN THE COMM ROOM SHALL HAVE WIRE GUARDS. SPRINKLER WATER LINE SHALL NOT CROSS THROUGH THE COMM ROOM. SPRINKLER PROTECTION IN THE COMM ROOM SHALL BE PROVIDED BY SIDEWALL SPRINKLERS.
9. THE UTILITY SYSTEMS FOR WATER ON FT. WAINWRIGHT HAVE BEEN PRIVATIZED AND IS OWNED BY DOYON UTILITIES (DU) LLC. PERMANENT WATER TO THE FACILITY WILL BE DESIGNED AND INSTALLED BY DU TO THE DOWNSTREAM SIDE OF THE FIRST COUPLING AFTER THE FIRE SERVICE LINE SPLITS FROM THE WATER SERVICE INSIDE THE FACILITY. CONTRACTOR SHALL BE RESPONSIBLE FOR ALL FIRE SUPPRESSION WORK BEYOND THIS POINT OF DEMARCATION (POD). SEE SHEETS M1.07 AND M1.09 FOR PLUMBING DETAIL OF WATER SERVICE AND POD.
10. PROVIDE INTERMEDIATE RATED SPRINKLERS IN MECHANICAL ROOM AND INTERMEDIATE OR HIGH RATED SPRINKLERS IN OTHER LOCATIONS AS REQUIRED BY NFPA 13.

NOT FOR CONSTRUCTION
BACKCHECK

US ARMY CORPS OF ENGINEERS
ALASKA DISTRICT

CONTRACT NO. _____
CONTRACTOR _____
CITY _____ STATE _____
PRIME CONTRACTOR — Recommended: _____
RESIDENT ENGINEER — Approved: _____ Date: _____

Symb	Action	Description	Date	Appvd

U.S. ARMY ENGINEER DISTRICT
CORPS OF ENGINEERS
ANCHORAGE, ALASKA

Designed: SMC
Drawn: SMC
Reviewed: C. VonGunten — Section
Submitted: D. Frenier — Branch
Chief — Engineering Division
Date: 16 JULY 2009
Dwg Scale: AS NOTED
Plot Scale: 1:2
File: FTW336A-113-FP1-01
Drawing No. F-211-13-01

INV. NO. W911KB-09-R-0007
PN 65076
FTW336A

FT. WAINWRIGHT, ALASKA
AIRCRAFT PARTS STORAGE
FIRE PROTECTION
PLANS
FIRE PROTECTION PLAN

Reference number:
FP1.01
Sheet 113 of 118

Drawing x:\UNIFIED\EN-TE\Jobs\FTW336A\Dwgs\FTW336A-113-FP1-01.dwg last saved on 7/15/2009 1:32 PM was plotted by Curfew, Donald L POA on 7/17/2009 6:57 AM

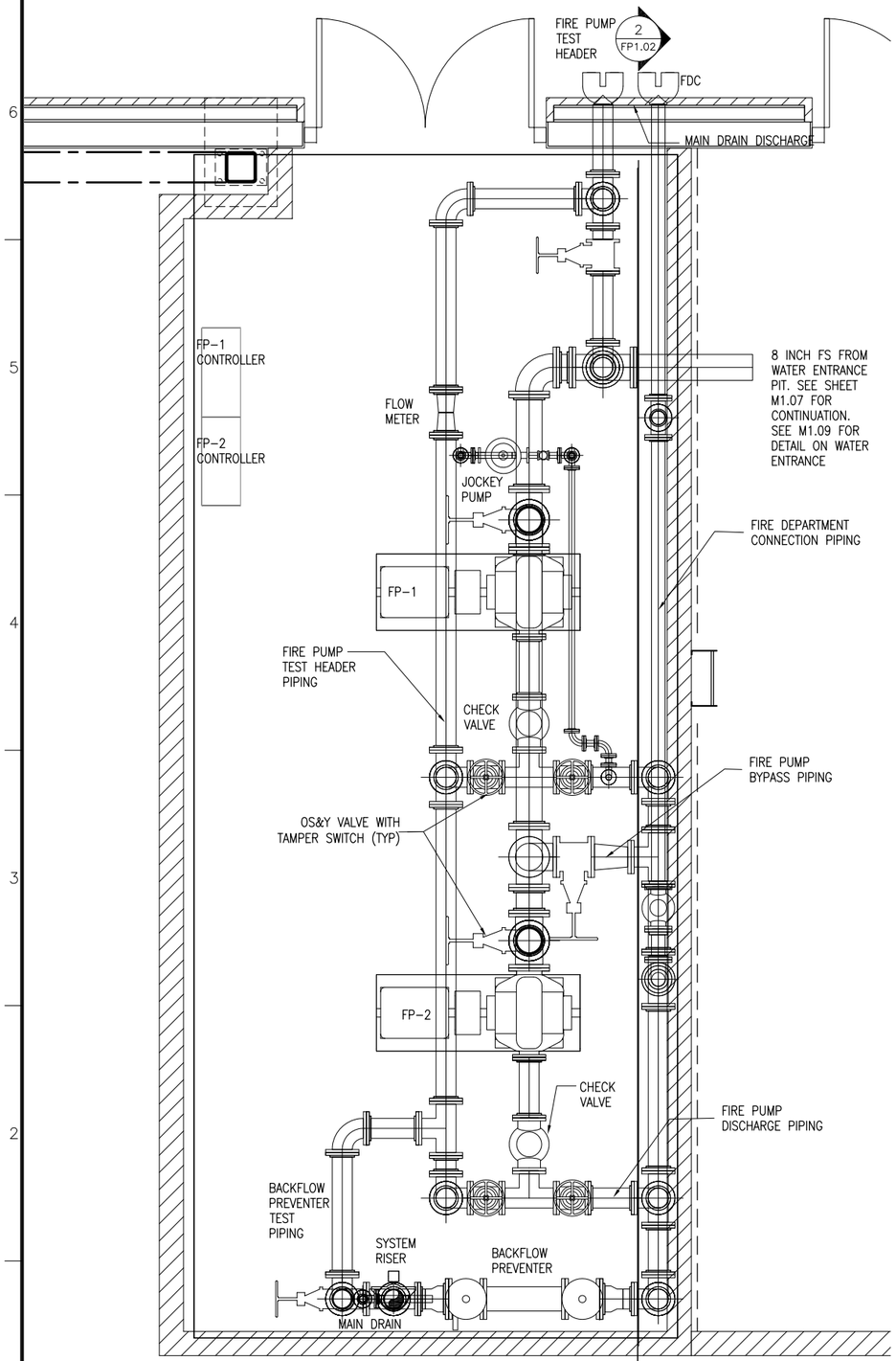

1 FP1.02 FP1.02 FIRE PROTECTION PUMP ROOM DETAILS
SCALE: 1/2"=1'-0"

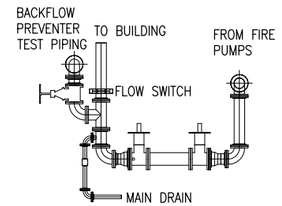

4 FP1.02 FP1.02 FIRE PROTECTION RISER
SCALE: 1/4"=1'-0"

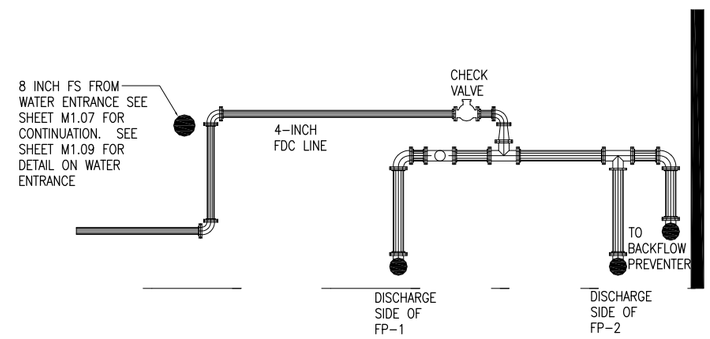

2 FP1.02 FP1.02 FIRE PROTECTION ROOM SECTION VIEW
SCALE: 1/4"=1'-0"

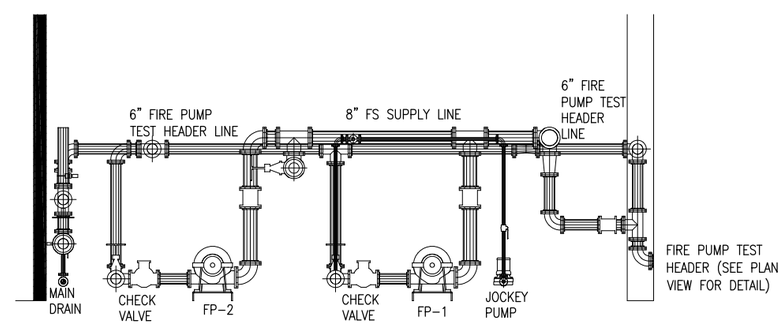

3 FP1.02 FP1.02 FIRE PROTECTION ROOM SECTION VIEW
SCALE: 1/4"=1'-0"

NOTES:

1. PROVIDE A CONCRETE PAD FOR EACH PUMP. SEE SHEET M3.03 FOR PAD DETAIL.
2. THE PUMP SUCTION LINE IS 8 INCHES.
3. THE CONTRACTOR IS RESPONSIBLE FOR ALL PIPE SIZES FROM THE DISCHARGE SIDE OF THE PUMP.
4. PROVIDE HANGERS AND PIPE SUPPORTS IN ACCORDANCE WITH THE REQUIREMENTS OF NFPA 13.
5. PROVIDE PROTECTION SEISMIC PROTECTION FOR PIPING IN ACCORDANCE WITH NFPA 13.
6. CONTRACTOR IS RESPONSIBLE FOR POSITIONING FDC AND PUMP TEST HEADER WITH CLEARANCE FOR ACCESSIBILITY. THE FDC SHALL BE LOCATED APPROXIMATELY 3 FEET ABOVE ADJACENT FINISHED GRADE. NUMBER OF TEST HEADER OUTLETS SHALL BE DETERMINED BY THE CONTRACTOR.

US ARMY CORPS OF ENGINEERS
ALASKA DISTRICT

CONTRACT NO. _____
CONTRACTOR _____
CITY _____ STATE _____
PRIME CONTRACTOR _____ Recommended: _____
RESIDENT ENGINEER _____ Approved: _____ Date: _____

Num	Action	Description	Date	Appvd

U.S. ARMY ENGINEER DISTRICT
CORPS OF ENGINEERS
ANCHORAGE, ALASKA

Designed: MED
Drawn: MED
Reviewed: T. Lubeck
Chief - CEPOA-EN-TE-CS - Section
Submitted: D. Frenier
Chief - CEPOA-EN-TE-CS - Section
Date: 16 JULY 2009
Dwg Scale: AS NOTED
Plot Scale: 1:2
File: FTW336A-114-FP1-02
Drawing #: F-F-211-13-01
CONTRACT NO. W911KB-09-R-0007
PN 65076
FTW336A

FT. WAINWRIGHT, ALASKA
AIRCRAFT PARTS STORAGE
CIVIL
PLANS
FIRE PROTECTION DETAILS

Reference number:
FP1.02
Sheet 114 of 118

NOT FOR CONSTRUCTION
BACKCHECK

Drawing x:\UNIFIED\EN-TE\Jobs\FTW336A\Dwgs\FTW336A-114-FP1-02.dwg last saved on 7/16/2009 11:44 AM was plotted by Curfew, Donald L POA on 7/17/2009 6:57 AM

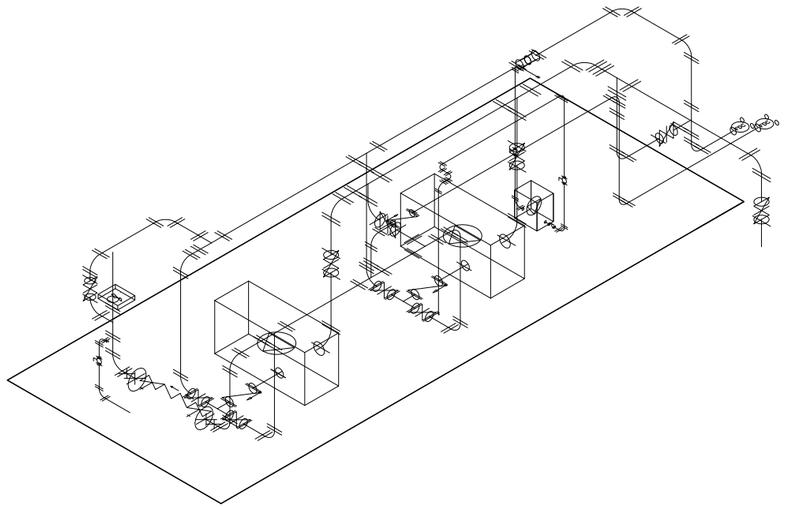

LEGEND

- BACKFLOW PREVENTER
- OS&Y GATE VALVE
- CHECK VALVE
- BALL VALVE
- FDC AND PUMP TEST HEADER
- FLOW SWITCH
- FLOW METER
- JOCKEY PUMP
- FIRE PUMP

2 FP1.03 | FP1.03 FIRE PROTECTION ONE-LINE ISOMETRIC

SCALE: NTS

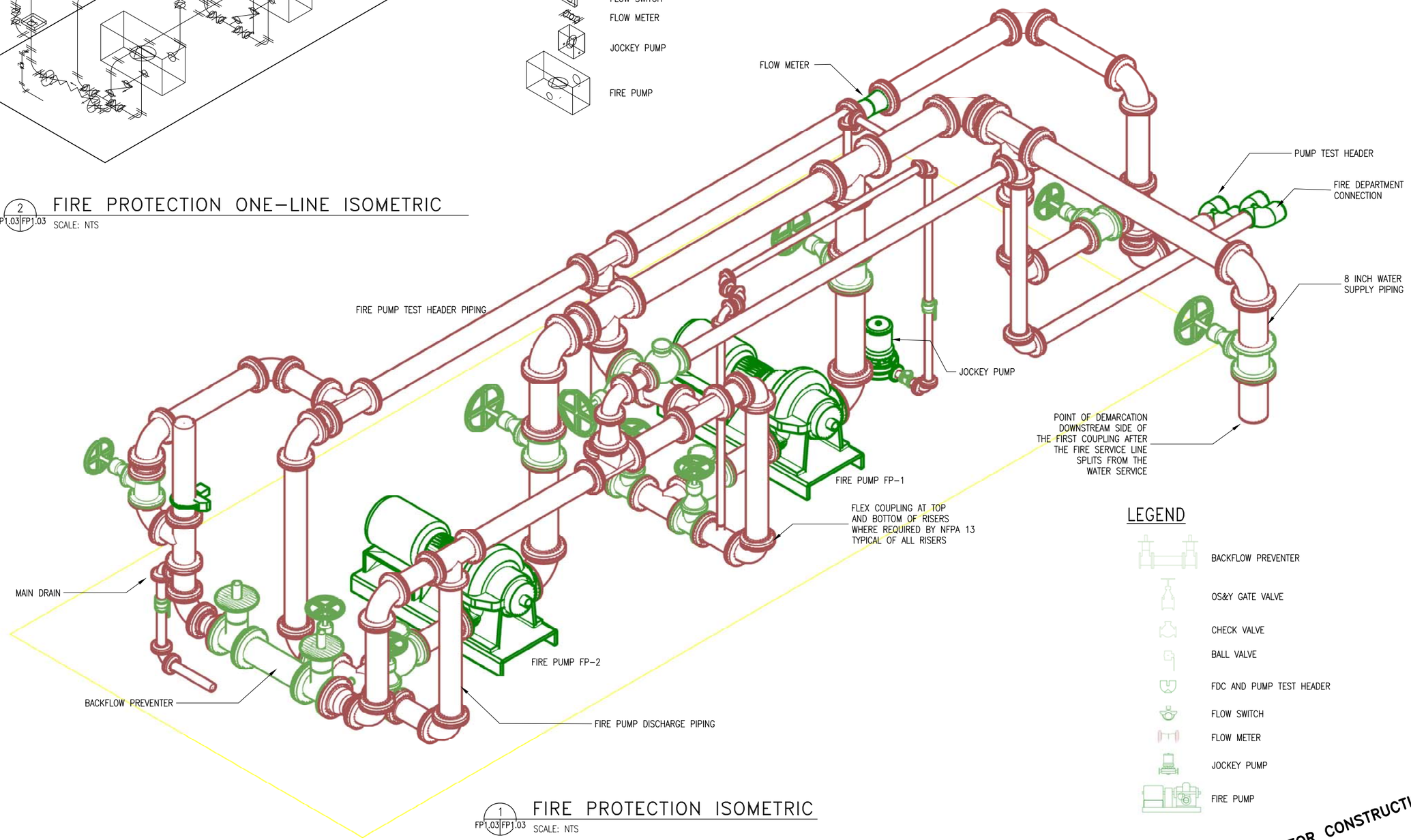

1 FP1.03 | FP1.03 FIRE PROTECTION ISOMETRIC

SCALE: NTS

LEGEND

- BACKFLOW PREVENTER
- OS&Y GATE VALVE
- CHECK VALVE
- BALL VALVE
- FDC AND PUMP TEST HEADER
- FLOW SWITCH
- FLOW METER
- JOCKEY PUMP
- FIRE PUMP

NOT FOR CONSTRUCTION

BACKCHECK

US ARMY CORPS OF ENGINEERS
ALASKA DISTRICT

CONTRACT NO. _____
CONTRACTOR _____
CITY _____ STATE _____
PRIME CONTRACTOR _____ Recommended: _____
RESIDENT ENGINEER _____ Approved: _____ Date: _____

Sym	Action	Description	Date	Appvd

U.S. ARMY ENGINEER DISTRICT
CORPS OF ENGINEERS
ANCHORAGE, ALASKA

Designed: RSF
Drawn: SMH
Reviewed: C. VONGUNTEN
Chief — CEPOA-DE-TE-MF — Section
Submitted: D. Freiner
Chief — CEPOA-DE-TE — Branch
Date: 16 JULY 2009
Dwg Scale: AS NOTED
Plot Scale: 1:2
File: FTW336A-115-FP1-03
Drawing: N F-211-13-01

INV. NO. W911KB-09-R-0007
PN 65076
FTW336A

FT. WAINWRIGHT, ALASKA
AIRCRAFT PARTS STORAGE
FIRE PROTECTION
PLANS
FIRE PROTECTION PUMP ROOM ISOMETRIC

Reference number:
FP1.03
Sheet 115 of 118

Drawing x:\UNIFIED\EN-TE\Jobs\FTW336A\Dwgs\FTW336A-115-FP1-03.dwg last saved on 7/16/2009 11:44 AM was plotted by Curfew, Donald L POA on 7/17/2009 6:58 AM

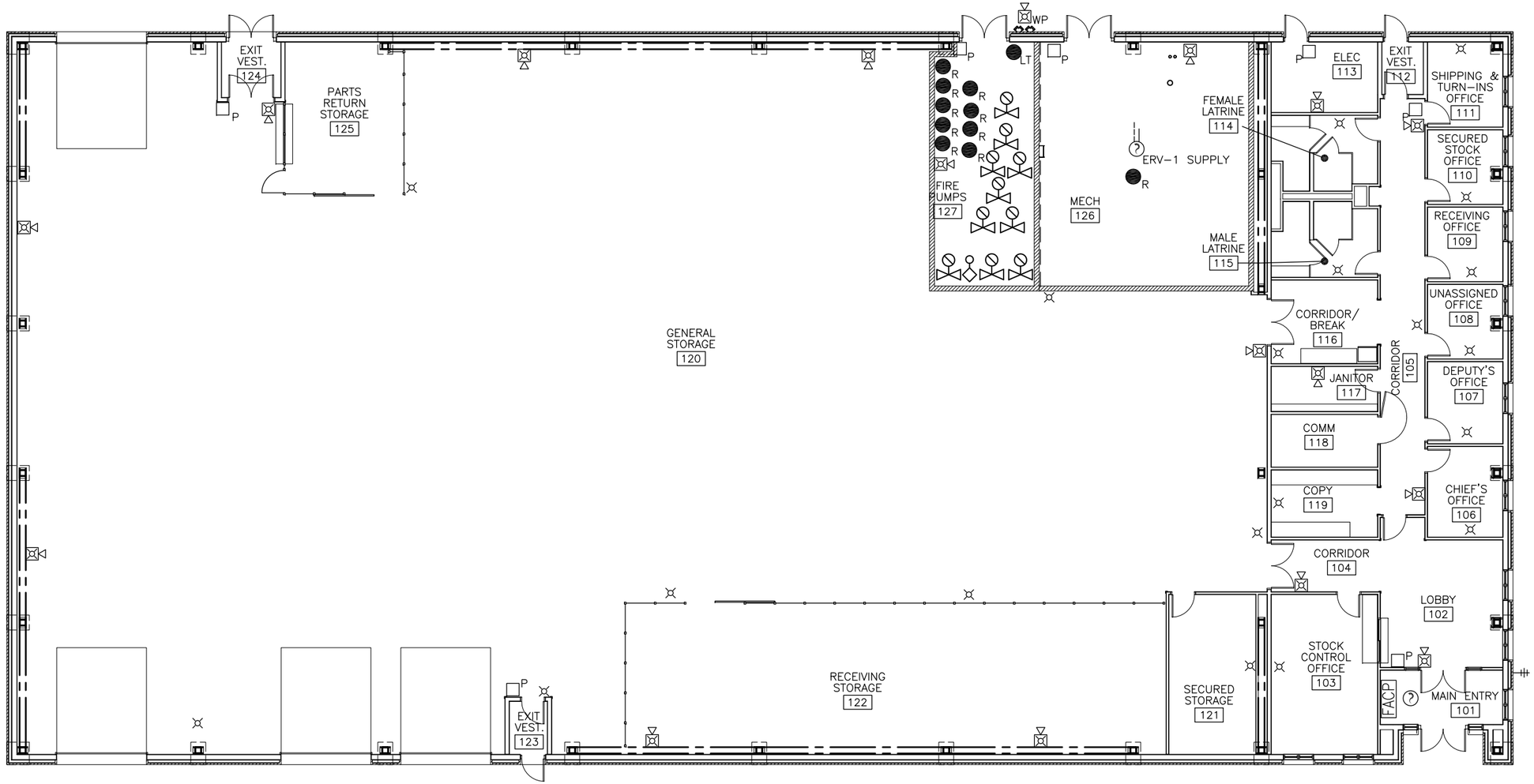

1 FA1.01 FA1.01 FIRE DETECTION AND ALARM PLAN

SCALE: 1/8"=1'-0"

0 5' 10'

NOTES:

1. THE FIRE ALARM SYSTEM IS CONCEPTUAL. CONTRACTOR SHALL DESIGN AND INSTALL FIRE ALARM SYSTEM COMPLETE AND READY TO USE. CONTRACTOR SHALL PROVIDE DETAILED SHOP DRAWINGS AND WIRING COUNT. THE DEVICES ARE SHOWN IN SUGGESTED LOCATIONS, FINAL QUANTITY AND LAYOUT SHALL BE IN ACCORDANCE WITH APPLICABLE CODES, THE MANUFACTURER'S RECOMMENDATIONS, AND EQUIPMENT LISTING.
2. ALL WIRING FOR THE FIRE ALARM SHALL BE IN RED CONDUIT.
3. THE FIRE ALARM CONTROL PANEL, TRANSCEIVER, BATTERIES AND BATTERY CHARGER SHALL BE SIZED PER SPECIFICATION 28 31 64.00 10 AND NFPA 72, 2007 EDITION.
4. THE FIRE ALARM SYSTEM HAS BEEN DESIGNED WITH A STROBE WITHIN 5 FEET OF ALL EXIT SIGNS. IF THE CONTRACTOR RELOCATES THE STROBES FURTHER THAN 5 FEET FROM EXIT SIGNS, THE FIRE ALARM SYSTEM SHALL CAUSE THE EXIT SIGNS TO FLASH.
5. COORDINATE WITH THE SPRINKLER CONTRACTOR TO VERIFY NUMBER OF FLOW SWITCHES AND TAMPER SWITCHES REQUIRED.
6. ALL FIRE ALARM EQUIPMENT SHALL BE UL LISTED OR FM APPROVED.
7. FIRE ALARM IDC AND NAC CIRCUITS SHALL BE CLASS A. FIRE ALARM SLC CIRCUITS SHALL BE STYLE 6.
8. COORDINATE DEVICE LOCATIONS WITH LIGHTING AND HVAC SYSTEMS.
9. ALL AUDIBLE AND VISUAL DEVICES SHALL BE SYNCHRONIZED AND PROVIDE THE STANDARD TEMPORAL PATTERN, NFPA 72.
10. DO NOT INSTALL ANY FIRE ALARM PANELS OR SIMILAR EQUIPMENT IN COMMUNICATIONS ROOM. BOOSTER PANELS MAY BE INSTALLED IN ELECTRICAL ROOM, FIRE PUMP ROOM OR OTHER ACCEPTABLE LOCATION.
11. CONTRACTOR SHALL PROVIDE A SMOKE DETECTOR AT EVERY FIRE ALARM CONTROL UNIT.

LEGEND

SYMBOL	DESCRIPTION
FACP	FIRE ALARM CONTROL PANEL
P	MANUAL PULL STATION
?	SMOKE DETECTOR
?	DUCT SMOKE DETECTOR
	FLOW SWITCH
	TAMPER SWITCH
R	RELAY MODULE
(WP)	HORN STROBE
	STROBE
LT	LOW TEMERATURE ALARM
	FIRE TRANSMITTER ANTENNA
WP	WEATHERPROOF HORN STROBE

NOT FOR CONSTRUCTION

BACKCHECK

US ARMY CORPS OF ENGINEERS
ALASKA DISTRICT

CONTRACT NO. _____
CONTRACTOR _____
CITY _____ STATE _____
PRIME CONTRACTOR _____
Recommended: _____
RESIDENT ENGINEER _____
Approved: _____
Date: _____

Symb	Action	Description	Date	Appvd

U.S. ARMY ENGINEER DISTRICT
CORPS OF ENGINEERS
ANCHORAGE, ALASKA

Designed: SMC
Drawn: SMC
Reviewed: R. FOX
Chief ---- Section
Submitted: D. Frenter
Chief ---- Branch
Date: 16 JULY 2009
Dwg Scale: AS NOTED
Plot Scale: 1:2
Plan: FTW336A-116-FA1-01
Drawing # F-211-13-01

INV. NO. W911KB-09-R-0007
PN 65076
FTW336A

FT. WAINWRIGHT, ALASKA
AIRCRAFT PARTS STORAGE
FIRE PROTECTION
PLANS
FIRE ALARM PLAN

Reference number:
FA1.01
Sheet 116 of 118

Drawing x:\UNIFIED\EN-TE\Jobs\FTW336A\Dwgs\FTW336A-116-FA1-01.dwg last saved on 7/16/2009 1:51 PM was plotted by Curfew, Donald L POA on 7/17/2009 6:59 AM

LEGEND: O=MANDATORY SEQUENCE	SYSTEM OUTPUT:	TRANSMIT ALARM TO EMERGENCY FORCES	TRANSMIT SUPERVISORY ALARM TO EMERGENCY FORCES	TRANSMIT TROUBLE ALARM TO EMERGENCY FORCES	ACTIVATE VISIBLE AND AUDIBLE ALARM ANNUNCIATOR	ACTIVATE MASS NOTIFY VISIBLE SUPERVISORY ANNUNCIATOR	ACTIVATE VISIBLE AND AUDIBLE SUPERVISORY ANNUNCIATOR	ACTIVATE VISIBLE AND AUDIBLE TROUBLE ANNUNCIATOR	ACTIVATE ALL OCCUPANT NOTIFICATION APPLIANCES	RELEASE ALL DOORS TO CLOSE IF CONTROLLED BY MAGNETIC DOOR HOLDERS	SHUT DOWN AIR HANDLING FAN	INITIATION DEVICES AND OCCUPANT NOTIFICATION APPLIANCES OPERATION MAINTAINED	TEMPORARILY AND IMMEDIATELY DEACTIVATE ALL OCCUPANT NOTIFICATION APPLIANCES SOUNDING EVACUATION ALARM	LOCAL SPRINKLER ALARM ACTIVATED UPON SPRINKLER FLOW
SYSTEM INPUT:														
SPRINKLER RISER OR FLOOR WATER FLOW OR PRESSURE SWITCH		O			O				O	O	O			O
SPRINKLER VALVE TAMPER SWITCH			O				O							
LOW TEMPERATURE ALARM			O				O							
MANUAL PULL STATION		O			O				O	O	O			
SMOKE DETECTOR		O			O				O	O	O			
SINGLE BREAK OR SINGLE GROUND FAULT IN FIRE ALARM CIRCUIT				O				O				O		
DUCT SMOKE DETECTOR			O				O				O			
MASS NOTIFICATION SYSTEM MANUAL FIRE ALARM OCCUPANT NOTIFICATION APPLIANCE OVERRIDE			O			O	O						O	
ELECTRIC FIRE PUMP RUNNING			O				O							
ELECTRIC FIRE PUMP LOSS OF PHASE			O				O							
ELECTRIC FIRE PUMP PHASE REVERSAL			O				O							
ELECTRIC FIRE PUMP CONTROLLER CONNECTED TO ALTERNATE POWER SOURCE			O				O							
JOCKEY PUMP LOSS OF POWER OR TURNED OFF			O				O							

1 FA1.02 FA1.02 FIRE ALARM MATRIX

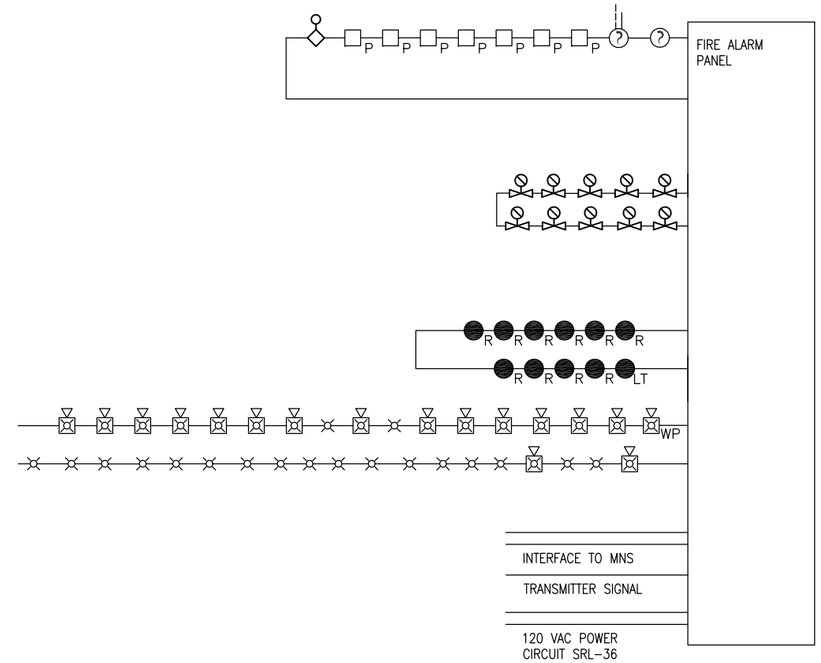

2 FA1.02 FA1.02 FIRE DETECTION AND ALARM RISER DIAGRAM

NOT FOR CONSTRUCTION
BACKCHECK

US ARMY CORPS OF ENGINEERS
ALASKA DISTRICT

CONTRACT NO. ___
CONTRACTOR ___
CITY ___ STATE ___
PRIME CONTRACTOR ___ Recommended: ___
RESIDENT ENGINEER ___ Approved: ___ Date: ___

Symb	Action	Description	Date	Appvd

U.S. ARMY ENGINEER DISTRICT
CORPS OF ENGINEERS
ANCHORAGE, ALASKA

Designed: SMC
Drawn: R.S.F./S.M.H.
Reviewed: ___
Chief ___ Section ___
Submitted: D. Frenier
Chief ___ Branch ___
Date: 16 JULY 2009
Dwg Scale: AS NOTED
Plot Scale: 1:2
File: FTW336A-117-FA1-02
Drawing: F-F211-13-01

INV. NO. W911KB-09-R-0007
PN 65076
FTW336A

FT. WAINWRIGHT, ALASKA
AIRCRAFT PARTS STORAGE
FIRE PROTECTION
PLANS
FIRE ALARM DETAILS

Reference number:
FA1.02
Sheet 117 of 118

Drawing x:\UNIFIED\EN-TE\Jobs\FTW336A\Dwgs\FTW336A-117-FA1-02.dwg last saved on 7/16/2009 1:50 PM was plotted by Curfew, Donald L POA on 7/17/2009 6:59 AM

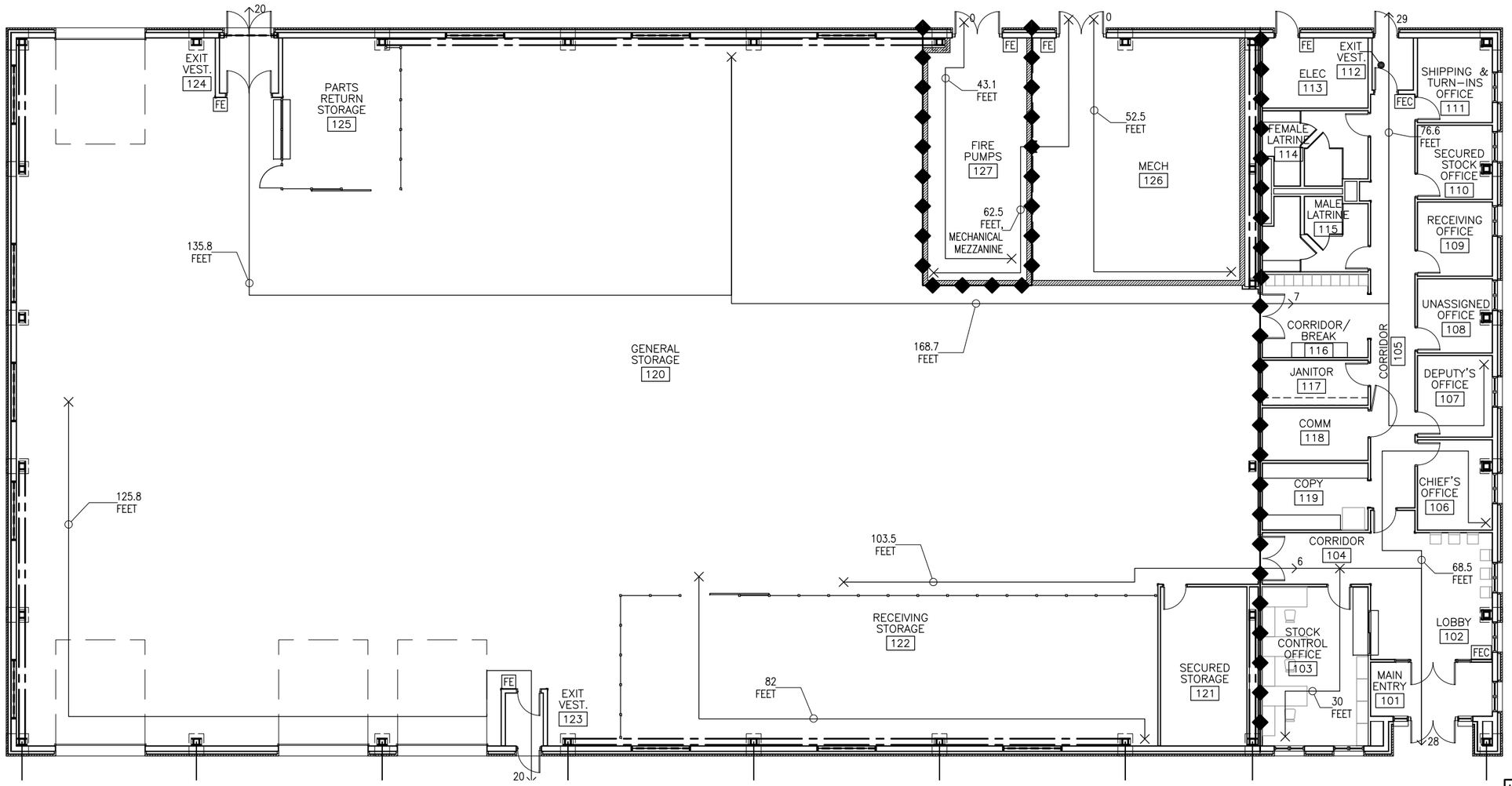

1 LS1.01 | LS1.01 LIFE SAFETY PLAN AND CODE ANALYSIS

SCALE: 1/8"=1'-0"

0 5' 10'

CODE ANALYSIS NEW AIRCRAFT PARTS STORAGE BUILDING

INTERNATIONAL BUILDING CODE (IBC) 2006

AIRCRAFT PARTS STORAGE BUILDING: 20,000 SQ. FT.

OCCUPANCY (NON-SEPARATED): (304)
S-1 (ROOMS 120-125) AND B (REMAINDER OF BUILDING)

CONSTRUCTION TYPE: (TABLE 601)
TYPE II-B (FULLY SPRINKLERED)

FIRE RESISTANCE RATING FOR EXTERIOR WALLS (TABLE 602)
0 HOURS BASED ON NEAREST BUILDING 85 FEET AWAY

TYPE II-B:
ALLOWABLE HEIGHT (B AND S-1): 55 FT. (TABLE 503)
ALLOWABLE HEIGHT INCREASE UP TO: 75 FT.
AUTOMATIC SPRINKLER SYSTEM (504.2)
ACTUAL HEIGHT (B AND S-1): 35 FT.

ALLOWABLE STORIES (B): 4 (TABLE 503)
ALLOWABLE STORIES (S-1): 3 (TABLE 503)
ALLOWABLE STORY INCREASE UP TO (B): 5 AND (S-1): 4
AUTOMATIC SPRINKLER SYSTEM (504.2)
ACTUAL STORIES (B AND S-1): 1

ALLOWABLE AREA INCREASE: (506)
UNLIMITED (507.3)

FIRE RESISTANCE RATING (HOURS): (TABLE 601)

STRUCTURE FRAME	SEE NOTE 1
BEARING WALLS	0
NONBEARING WALLS	SEE NOTE 2
FLOOR CONSTRUCTION	0
ROOF CONSTRUCTION	0

1. COLUMNS IN THE WAREHOUSE WILL ONLY BE ON EXTERIOR WALLS. THESE COLUMNS WILL NOT BE SURROUNDED BY RACKS AND WILL NOT REQUIRE THE 2-HOUR RATED CONSTRUCTION OR SIDEWALL SPRINKLERS AS REQUIRED BY UFC 3-600-01 PAR. 6-11.3
2. NON-BEARING PARTITIONS ARE TO COMPLY WITH EITHER THE REQUIREMENTS OF THE SPECIAL OCCUPANCY CHAPTER OF UFC 3-600-01 OR NFPA 101 AS REQUIRED BY UFC 3-600-01 PAR. 2-1.2.
3. UFC 3-600-01 PARAGRAPH 6-11.5 REQUIRES ONE HOUR FIRE RATED SEPARATION BETWEEN WAREHOUSE AREA AND OFFICE AREA.

NFPA 101 LIFE SAFETY CODE (2009)

OCCUPANT LOAD 1ST FLOOR: (TABLE 7.3.1.2)
STORAGE - 15966 SF / 500 LOAD FACTOR = 32
BUSINESS - 3880 SF / 100 LOAD FACTOR = 39
MECHANICAL ROOM - N/A, EXPECTED NUMBER OF OCCUPANTS = 0
FIRE PUMP ROOM - N/A, EXPECTED NUMBER OF OCCUPANTS = 0

TOTAL OCCUPANT LOAD = 96

NUMBER OF EXITS:
STORAGE: 2 (42.2..4.1(3))
BUSINESS: 2 (38.2.1)
PROVIDED: 2 STORAGE, 2 BUSINESS

MINIMUM WIDTHS OF EXIT COMPONENTS: (TABLE 7.3.3.1)
CORRIDORS - >5.8 IN., ACTUAL = 70 IN.
DOORS - >4.0 IN. STORAGE, ACTUAL = 36 IN. NORTH AND SOUTH DOORS
5.8 IN. BUSINESS, ACTUAL = 36 IN. NORTH DOOR, 72 IN. LOBBY DOOR

CORRIDOR RATINGS (7.1.3.1)
STORAGE: 7.1.3.1 DOES NOT APPLY (42.3.6)
BUSINESS: REQUIRED 1 HR OR 0 HR AND AUTOMATIC FIRE SYSTEM (38.3.6.1)

DEAD END CORRIDORS
STORAGE: ALLOWABLE - 100 FEET MAX WHEN SPRINKLERED (TABLE 42.2.5)
BUSINESS: ALLOWABLE - 50 FEET MAX WHEN SPRINKLERED (38.2.5.2.1)
ACTUAL - NONE

TRAVEL DISTANCE
STORAGE: ALLOWABLE - 400 FEET WHEN SPRINKLERED (42.2.6)
BUSINESS: ALLOWABLE - 300 FEET WHEN SPRINKLERED (38.2.6.1)
ACTUAL: STORAGE - 169 FEET; BUSINESS - 77 FEET

COMMON PATH OF TRAVEL
MECHANICAL ROOM: ALLOWABLE - 100 FEET WHEN SPRINKLERED (7.12.1(1)(a))
ACTUAL - 52.5 FEET; 62.5 FEET MEZZANINE; 43.1 FEET PUMP ROOM
BUILDING: ALLOWABLE - 100 FEET WHEN SPRINKLERED (38.2.5.3.1)
ACTUAL - 99 FEET STORAGE; 32 FEET BUSINESS

FIRE PROTECTION FEATURES

AUTOMATIC SPRINKLERS: ENTIRE BUILDING
FIRE DETECTION AND ALARM SYSTEM
EMERGENCY LIGHTING AND EXIT MARKING ARE PROVIDED

RESPONDING FIRE DEPARTMENT: FORT WAINWRIGHT

DESIGN CODES

UFC 3-600-01, DESIGN: FIRE PROTECTION ENGINEERING FOR FACILITIES, 26 SEPTEMBER 2006
UFC 4-021-01, DESIGN AND O&M: MASS NOTIFICATION SYSTEMS, 9 APRIL 2008

INTERNATIONAL BUILDING CODE, 2006

NATIONAL FIRE PROTECTION ASSOCIATION
NFPA 1, FIRE CODE, 2009
NFPA 10, STANDARD FOR PORTABLE FIRE EXTINGUISHERS, 2007
NFPA 13, INSTALLATION OF SPRINKLER SYSTEMS, 2007
NFPA 20, STANDARD FOR THE INSTALLATION OF STATIONARY PUMPS FOR FIRE PROTECTION, 2007
NFPA 72, NATIONAL FIRE ALARM CODE, 2007
NFPA 80, STANDARD FOR FIRE DOORS AND OTHER OPENING PROTECTIVES, 2007
NFPA 90A, STANDARD FOR THE INSTALLATION OF AIR-CONDITIONING AND VENTILATING SYSTEMS, 2009
NFPA 101, LIFE SAFETY CODE, 2009

LEGEND

- NON-RATED WALLS
- 1 HOUR FIRE BARRIER
- TRAVEL DISTANCE TO EXIT
- COMMON PATH OF TRAVEL
- # OCCUPANT EXIT LOADING
- FE FIRE EXTINGUISHER BRACKET
- FEC FIRE EXTINGUISHER CABINET

NOT FOR CONSTRUCTION
BACKCHECK

US ARMY CORPS OF ENGINEERS
ALASKA DISTRICT

CONTRACT NO. ___
CONTRACTOR ___
CITY ___ STATE ___
PRIME CONTRACTOR ___ Recommended: ___
RESIDENT ENGINEER ___ Approved: ___ Date: ___

Symb	Action	Description	Date	Appvd

U.S. ARMY ENGINEER DISTRICT
CORPS OF ENGINEERS
ANCHORAGE, ALASKA

Designed: SMC
Drawn: SMC
Reviewed: C. VonGunten
Chief - CEPOA-EN-TE-MF - Section
Submitted: D. Frenier
Chief - CEPOA-EN-TE-MF - Branch
Date: 16 JULY 2009
Dwg Scale: AS NOTED
Plot Scale: 1:2
File: FTW336A-118-LS1-01
Drawing #: F-211-13-01

INV. NO. W911KB-09-R-0007
PN 65076
FTW336A

FT. WAINWRIGHT, ALASKA
AIRCRAFT PARTS STORAGE
FIRE PROTECTION
PLANS
LIFE SAFETY PLAN

Reference number:
LS1.01
Sheet 118 of 118

Drawing x:\UNIFIED\EN-TE\Jobs\FTW336A\Dwgs\FTW336A-118-LS1-01.dwg last saved on 7/14/2009 4:04 PM was plotted by Curfew, Donald L POA on 7/17/2009 6:59 AM