14-Aug-21

Variant: [No Variations]

RELEASED-10.10.2020

Page	Index	Page	Index	Page	Index	Page	Index
1	COVER PAGE	11	EEPROM	21	.....	31	.....
2	STARTER PAGE	12	.....	22	.....	32	.....
3	MCU	13	.....	23	.....	33	.....
4	ETHERCAT	14	.....	24	.....	34	.....
5	PROFINET	15	.....	25	.....	35	.....
6	POWER	16	.....	26	.....	36	.....
7	RS232	17	.....	27	.....	37	.....
8	IO-LINK	18	.....	28	.....	38	.....
9	AFE	19	.....	29	.....	39	.....
10	CONNECTORs	20	.....	30	.....	40	.....

DESIGN CONSIDERATIONS

DESIGN NOTE:
Example text for informational design notes .

DESIGN NOTE:
Example text for debug notes.

DESIGN NOTE:
Example text for critical design notes.

LAYOUT NOTE:
Example text for critical layout guidelines.

DESIGN NOTE:
Example text for cautionary design notes.

Variante: [No Variations]

Rev.	Description	Date	Name

	Date	Name	Product
Editor	10.10.20	MuOz	
Check	***	***	Schematic Control Unit v01
Ref.	***	***	
			File [01] - COVER PAGE.SchDoc
			PCB-Number
Sheet Size A3	Date *		Sheet: 1 / 12

STARTER PAGE

TEMPLATE NOTES

Set Project Parameters

1) Go to Project -> Project Options -> Parameters
2) Set Company, Project and VersionRevision

Mark Not Fitted Components as
NF

Net Class Example

Differential signal example

TITLE Examples

PAGE TITLE

Peripheral / Group of component title

Smaller Title

Schematic Status Explanation

DRAFT - Very early stage of schematic, ignore details.
PRELIMINARY - Close to final schematic.
CHECKED - There should not be any mistakes. Tell the engineer if you find one.
RELEASED - A board with this schematic has been sent to production.

Variante: [No Variations]

Rev.	Description	Date	Name

	Date	Name
Editor	10.10.20	MuOz
Check	***	***
Ref.	***	***

Product

Schematic
Control Unit
v01

File
[02] - STARTER PAGE.SchDoc

PCB-Number

Sheet Size	Date	Sheet:
A3	*	2 / 12

BLOCK DIAGRAM

[01] - COVER PAGE

[02] - STARTER PAGE

POWER

EEPROM

MCU

IO-LINK

RS232

ETHERCAT

PROFINET

AFE

CONNECTORS

Variante: [No Variations]

					Date	Name	Product
				Editor	10.10.20	MuOz	
				Check	***	***	Schematic Control Unit v01
				Ref.	***	***	
							File PumpSystem.SchDoc
							PCB-Number
				Sheet Size	Date		Sheet:
Rev.	Description	Date	Name	A3	*		3 / 12

MCU

ParameterSet

STM32F446

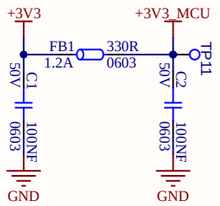

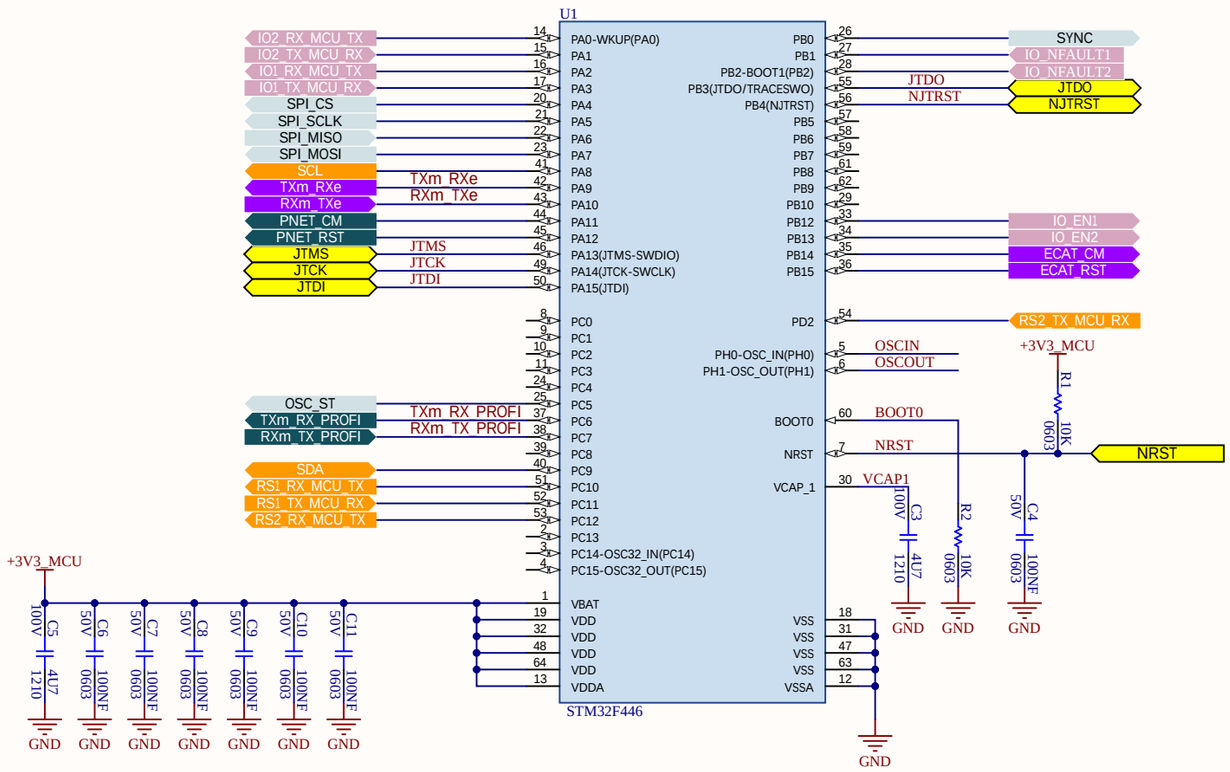

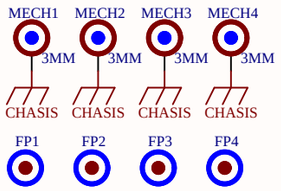

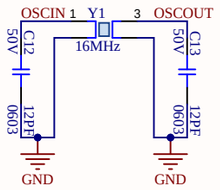

MECH5
ESD LOGO

Variante: [No Variations]

					Date	Name	Product
				Editor	10.10.20	MuOz	
				Check	***	***	Schematic Control Unit v01
				Ref.	***	***	
							File [03] - MCU.SchDoc
							PCB-Number
Rev.	Description	Date	Name	Sheet Size A3	Date *		Sheet: 4 / 12

ETHERCAT

ParameterSet

UG IC ETHERCAT

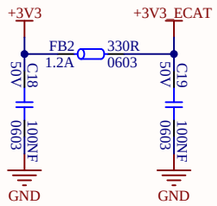

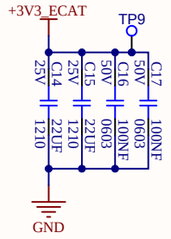

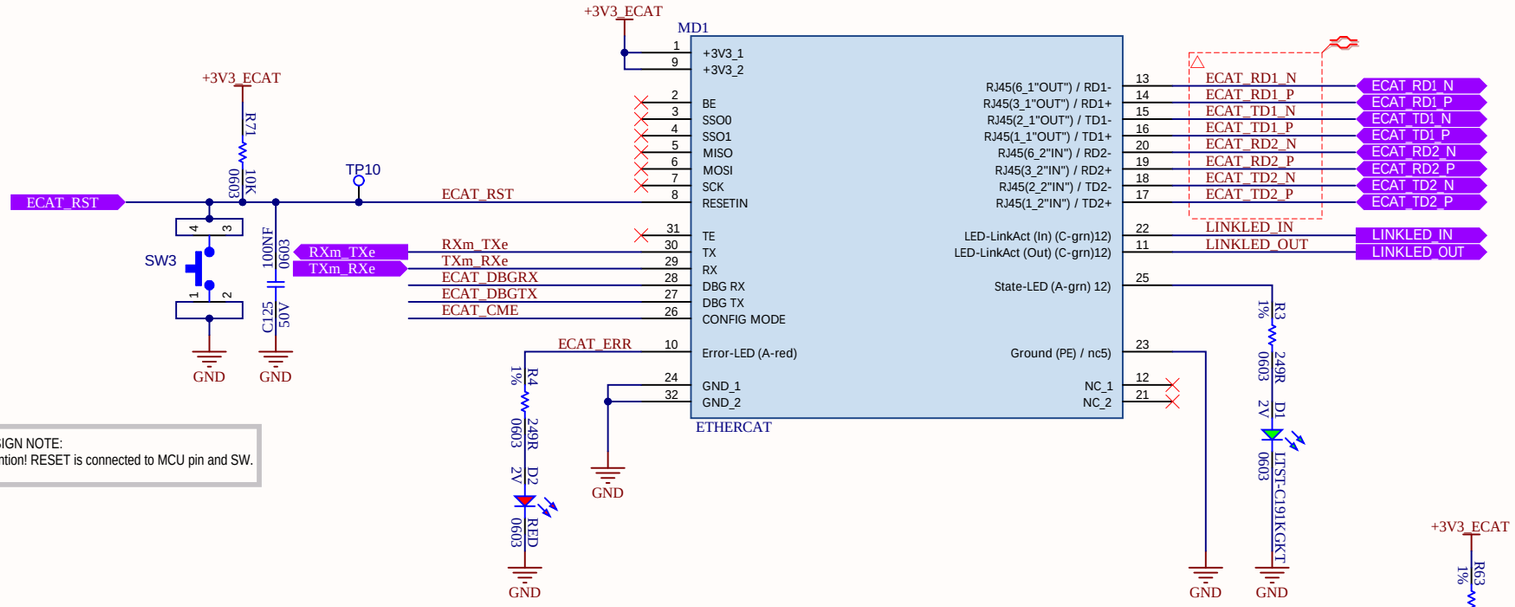

DESIGN NOTE:
Attention! RESET is connected to MCU pin and SW.

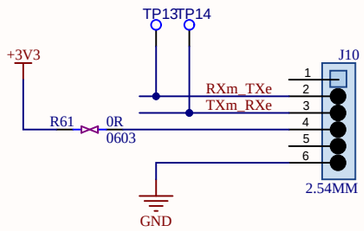

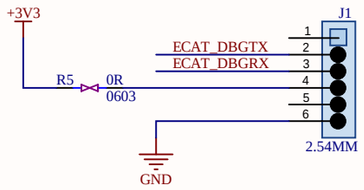

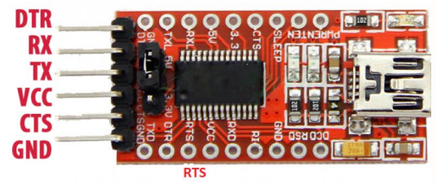

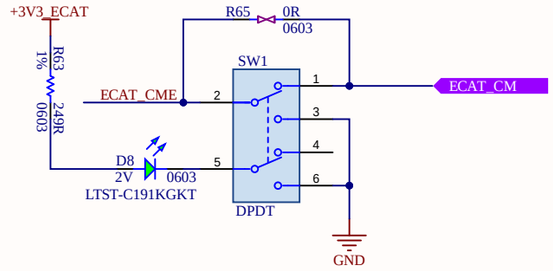

DESIGN NOTE:
If led is on CM is connected to ground otherwise CM connected to MCU

Variante: [No Variations]

Rev.	Description	Date	Name

	Date	Name
Editor	10.10.20	MuOz
Check	***	***
Ref.	***	***

Product

Schematic
Control Unit
v01

File
[04] - ETHERCAT.SchDoc

PCB-Number

Sheet Size	Date	Sheet:
A3	*	5 / 12

PROFINET

ParameterSet

UG IC PROFINET

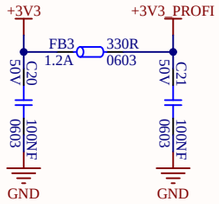

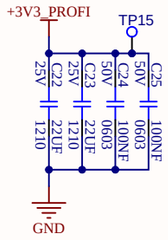

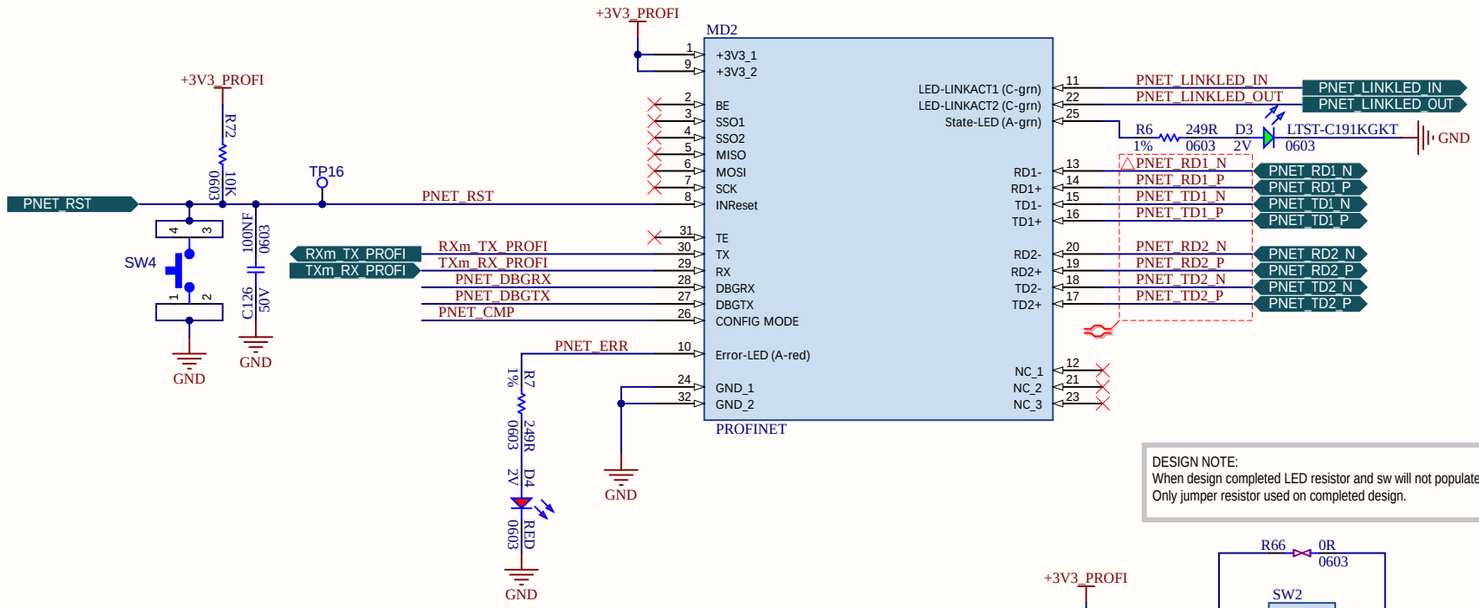

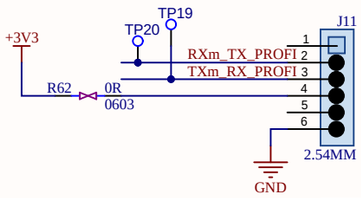

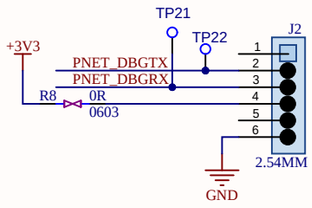

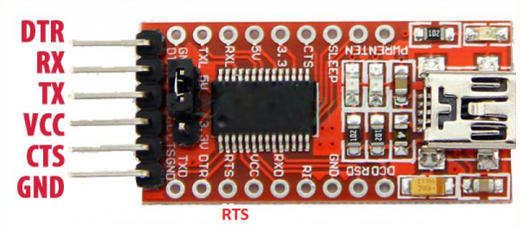

DESIGN NOTE:
When design completed LED resistor and sw will not populated.
Only jumper resistor used on completed design.

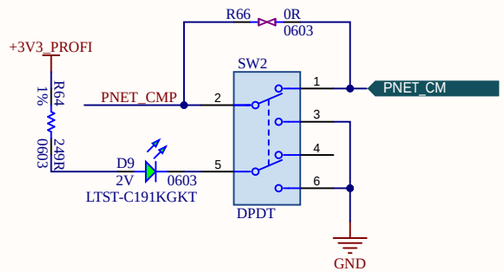

DESIGN NOTE:
If led is on CM is connected to ground otherwise CM connected to MCU

Variante: [No Variations]

					Date	Name	Product
				Editor	10.10.20	MuOz	
				Check	***	***	Schematic Control Unit v01
				Ref.	***	***	
							File [05] - PROFINET.SchDoc
							PCB-Number
Rev.	Description	Date	Name	Sheet Size	Date		Sheet: 6 / 12
				A3	*		

POWER

+24->+3V3

DESIGN NOTE:
RthJA=36 C/W
TA=85 C
rdson(max)=0.384
(I*I*0.384)*36+85<150
Imax=2.1A@85C Ta

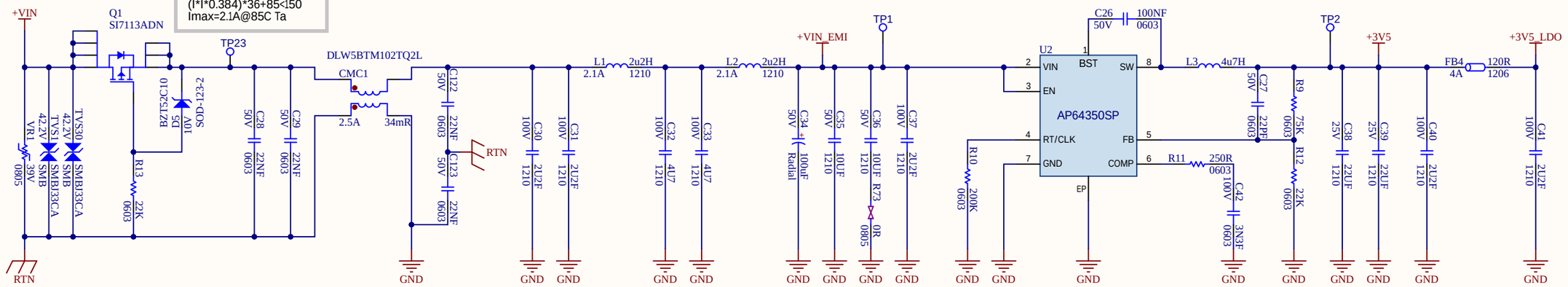

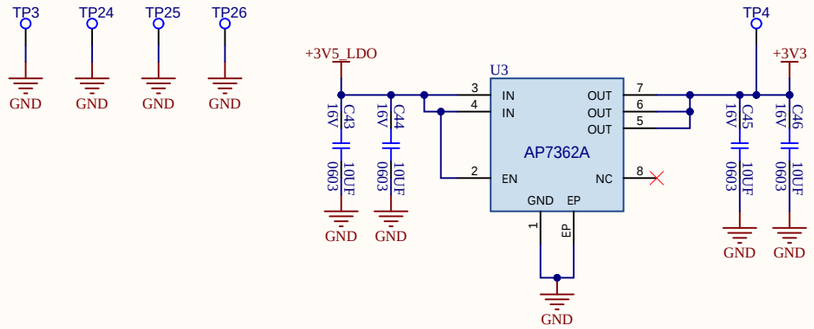

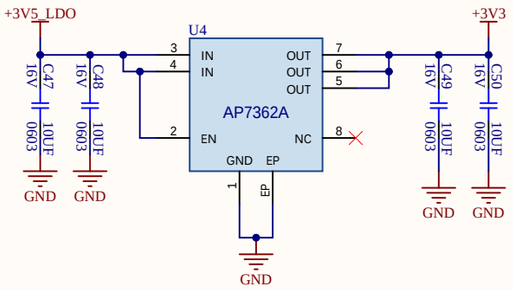

Variante: [No Variations]

					Date	Name	Product
				Editor	10.10.20	MuOz	
				Check	***	***	Schematic Control Unit v01
				Ref.	***	***	
							File [06] - POWER.SchDoc
							PCB-Number
				Sheet Size	Date		Sheet:
				A3	*		7 / 12
Rev.	Description	Date	Name				

RS232

ParameterSet

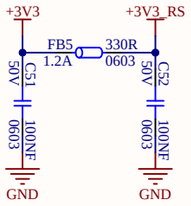

TRS3232

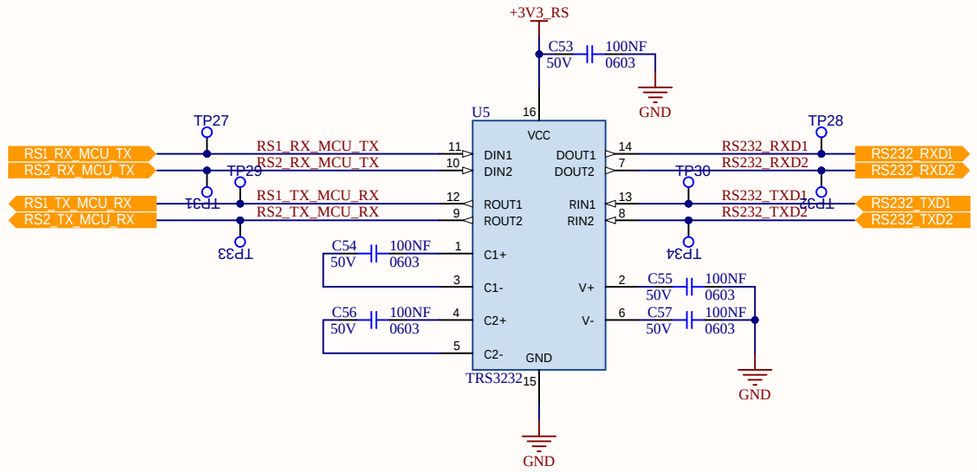

Variante: [No Variations]

					Date	Name	Product
				Editor	10.10.20	MuOz	
				Check	***	***	Schematic Control Unit v01
				Ref.	***	***	
							File [07] - RS232.SchDoc
							PCB-Number
Rev.	Description	Date	Name	Sheet Size A3	Date *		Sheet: 8 / 12

IO-LINK

ParameterSet

+3V3 — FB6 1.2A — 330R 0603 — +3V3_IO

C58 50V 0603 100NF — GND

C59 50V 0603 100NF — GND

TIOL111-1

LP1

C60 50V 1210 10UF — GND

C61 100V 1206 1UF — GND

+VIN_AVDD

U6 TIOL111

9	L+	VCC_IN/OUT	1
8	CQ	RX	3
		TX	4
7	L-	EN	5
6	ILIM	WAKE	10
		NFAULT	2
	GND		
	11		

+3V3_IO

TP35 IO1_RX — IO1_RX_MCU_TX

TP38 IO1_TX — IO1_TX_MCU_RX

TP37 IO_EN1 — IO_EN1

R14 10K 0603 — C62 50V 0603 1UF

IO_NFAULT1

CQ1 — TP36 — CQ1

LN1

150mA D6 SOD-123 1N4148W

R15 0603 0R — GND

GND

Q2 MMBTA06 SOT-23-3 — IO1_TX

R67 0603 330R — GND

DESIGN NOTE:
10mA Current Sink

TIOL111-2

LP2

C64 50V 1210 10UF — GND

C65 100V 1206 1UF — GND

+VIN_AVDD

U7 TIOL111

9	L+	VCC_IN/OUT	1
8	CQ	RX	3
		TX	4
7	L-	EN	5
6	ILIM	WAKE	10
		NFAULT	2
	GND		
	11		

+3V3_IO

TP40 IO2_RX — IO2_RX_MCU_TX

TP42 IO2_TX — IO2_TX_MCU_RX

TP43 IO_EN2 — IO_EN2

R16 10K 0603 — C63 50V 0603 1UF

IO_NFAULT2

CQ2 — TP41 — CQ2

LN2

150mA D7 SOD-123 1N4148W

R17 0603 0R — GND

GND

Q3 MMBTA06 SOT-23-3 — IO2_TX

R68 0603 330R — GND

DESIGN NOTE:
10mA Current Sink

Variante: [No Variations]

	Date	Name
Editor	10.10.20	MuOz
Check	***	***
Ref.	***	***

Product

Schematic
Control Unit
v01

File
[08] - IO-LINK.SchDoc

PCB-Number

Sheet Size	Date	Sheet:
A3	*	9 / 12

Rev.	Description	Date	Name

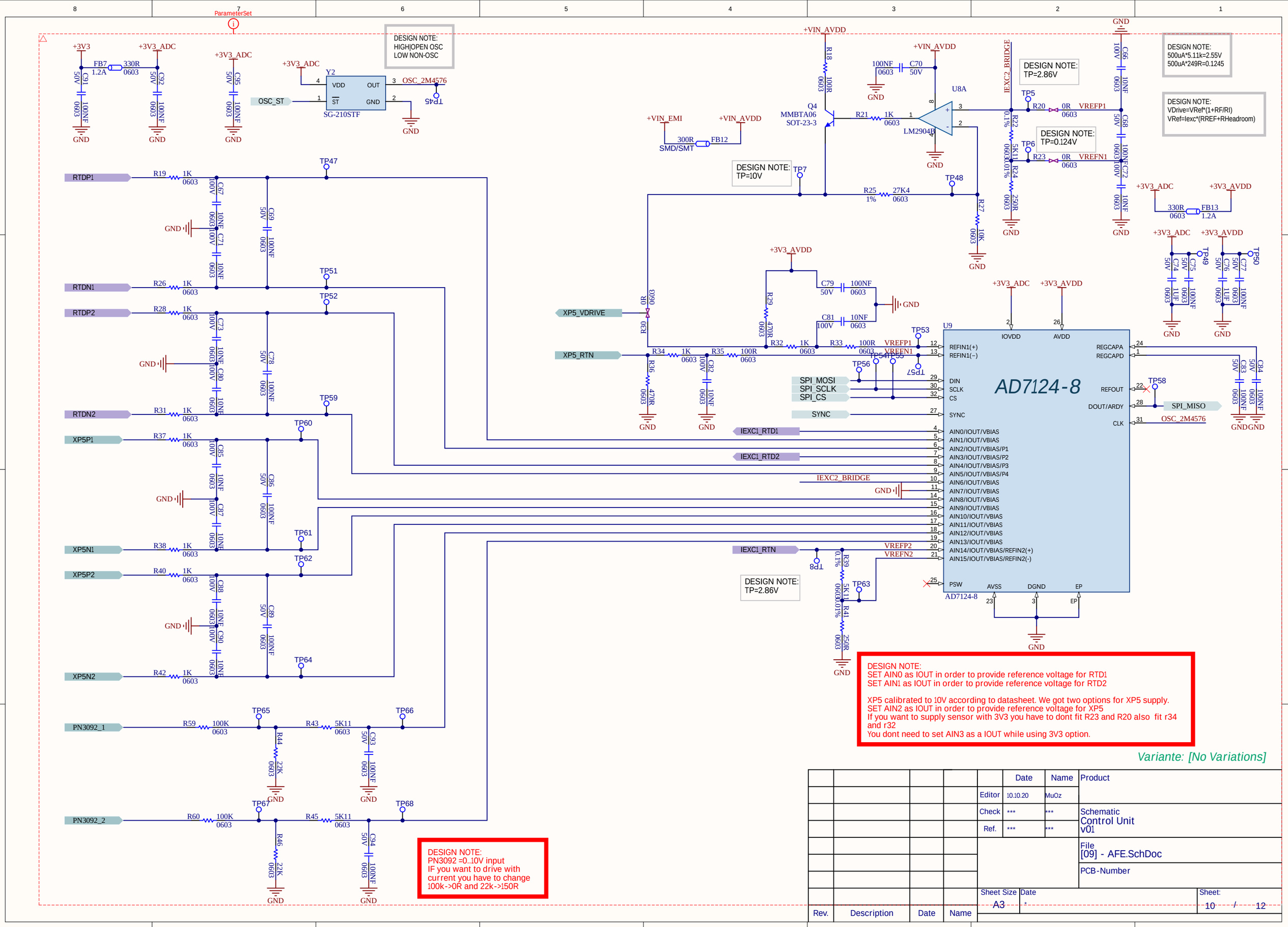

ParameterSet
DESIGN NOTE:
HIGH|OPEN OSC
LOW NON-OSC
Y2
SG-210STF
OSC_ST
OSC_2M4576
+3V3
+3V3_ADC
+VIN_AVDD
+VIN_EMI
+VIN_AVDD
+3V3_AVDD
GND
RTDP1
RTDN1
RTDP2
RTDN2
XP5P1
XP5N1
XP5P2
XP5N2
PN3092_1
PN3092_2
XP5_VDRIVE
XP5_RTN
IEXC1_RTD1
IEXC1_RTD2
IEXC1_RTN
IEXC2_BRIDGE
SPI_MOSI
SPI_SCLK
SPI_CS
SYNC
SPI_MISO
Q4
MMBTA06
SOT-23-3
U8A
LM2904B
DESIGN NOTE:
TP=2.86V
DESIGN NOTE:
TP=0.124V
DESIGN NOTE:
TP=10V
DESIGN NOTE:
500uA*5.11k=2.55V
500uA*249R=0.1245
DESIGN NOTE:
VDrive=VRef*(1+RF/RI)
VRef=Iexc*(RREF+RHeadroom)
U9
AD7124-8
IOVDD
AVDD
REFIN1(+)
REFIN1(−)
DIN
SCLK
CS
SYNC
AIN0/IOUT/VBIAS
AIN1/IOUT/VBIAS
AIN2/IOUT/VBIAS/P1
AIN3/IOUT/VBIAS/P2
AIN4/IOUT/VBIAS/P3
AIN5/IOUT/VBIAS/P4
AIN6/IOUT/VBIAS
AIN7/IOUT/VBIAS
AIN8/IOUT/VBIAS
AIN9/IOUT/VBIAS
AIN10/IOUT/VBIAS
AIN11/IOUT/VBIAS
AIN12/IOUT/VBIAS
AIN13/IOUT/VBIAS
AIN14/IOUT/VBIAS/REFIN2(+)
AIN15/IOUT/VBIAS/REFIN2(-)
PSW
AVSS
DGND
EP
REGCAPA
REGCAPD
REFOUT
DOUT/ARDY
CLK
DESIGN NOTE:
TP=2.86V
DESIGN NOTE:
PN3092 =0..10V input
IF you want to drive with
current you have to change
100k->0R and 22k->150R
DESIGN NOTE:
SET AIN0 as IOUT in order to provide reference voltage for RTD1
SET AIN1 as IOUT in order to provide reference voltage for RTD2
XP5 calibrated to 10V according to datasheet. We got two options for XP5 supply.
SET AIN2 as IOUT in order to provide reference voltage for XP5
If you want to supply sensor with 3V3 you have to dont fit R23 and R20 also fit r34 and r32
You dont need to set AIN3 as a IOUT while using 3V3 option.
Variante: [No Variations]
Date
Name
Product
Editor
10.10.20
MuOz
Check
Ref.
Schematic
Control Unit
v01
File
[09] - AFE.SchDoc
PCB-Number
Sheet Size
A3
Date
Sheet:
10 / 12
Rev.
Description
Date
Name

CONNECTORs

RS232-TXRX1

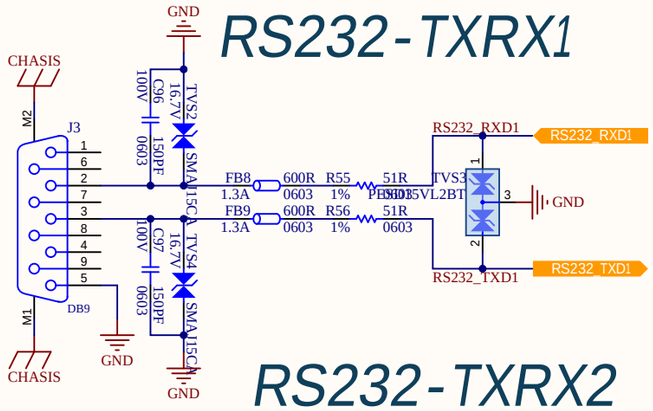

RS232-TXRX2

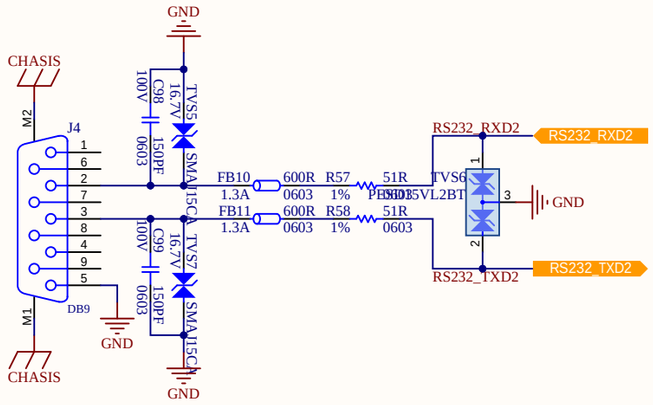

ETHERCAT

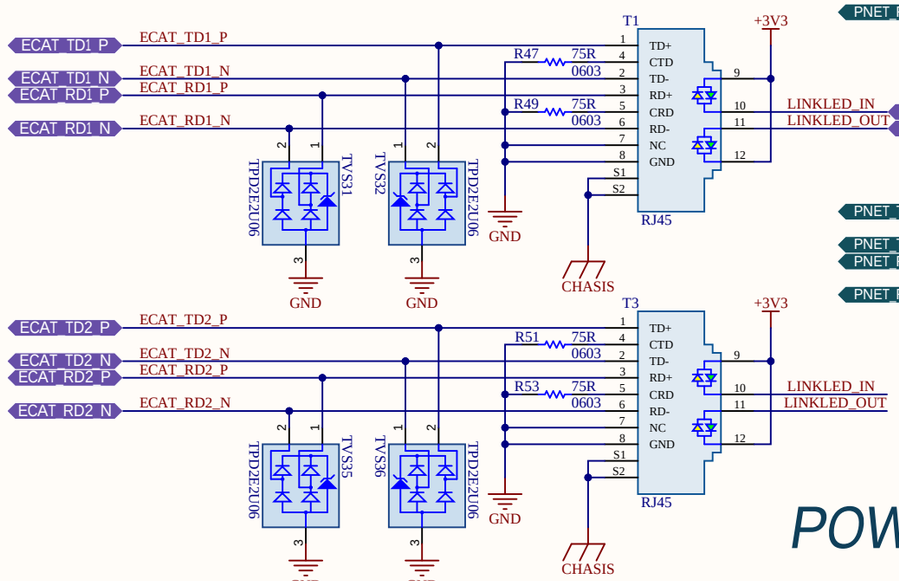

PROFINET

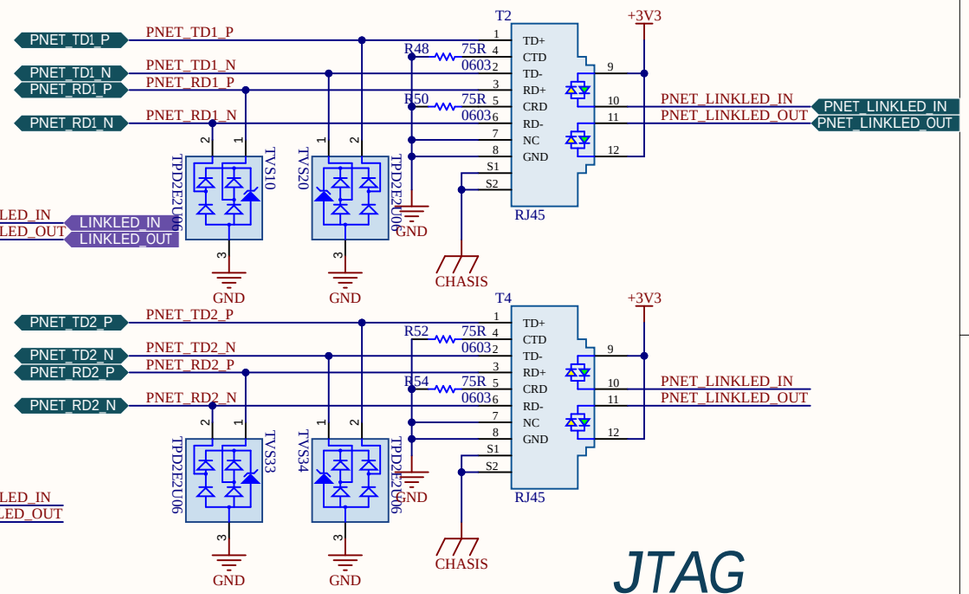

POWER IN

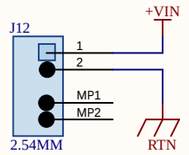

JTAG

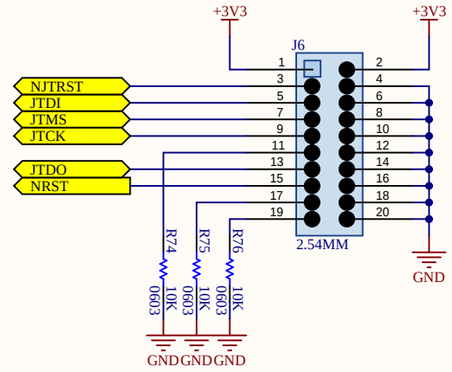

RTD 1-2

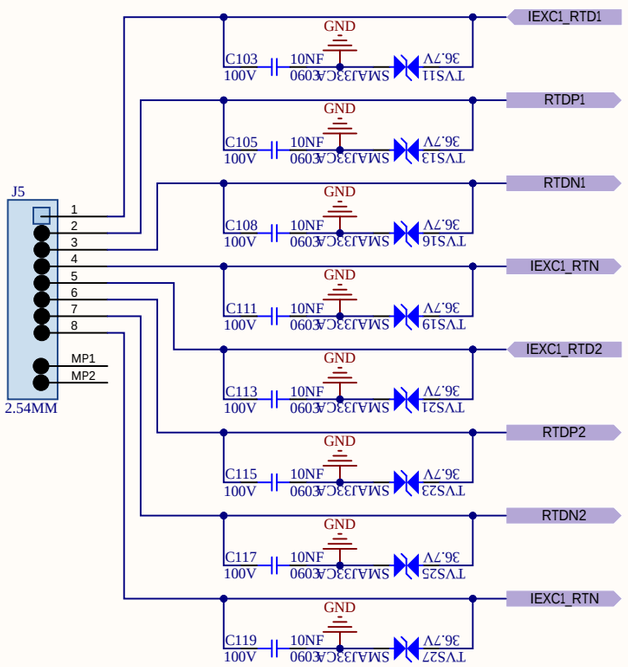

XP5 1-2

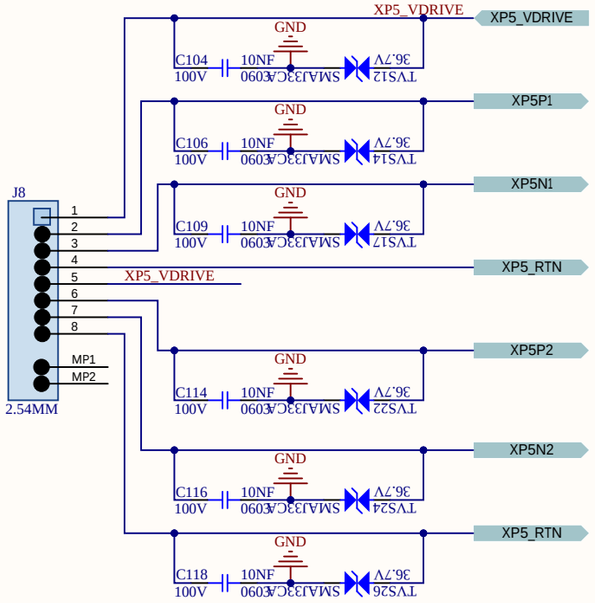

IO-LINK-1

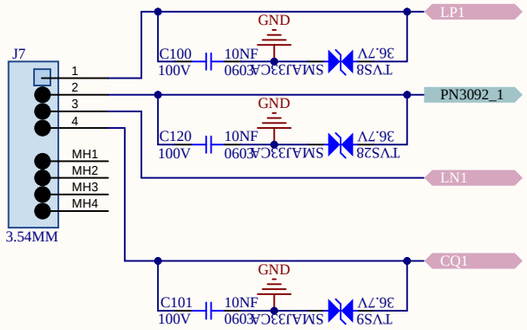

IO-LINK-2

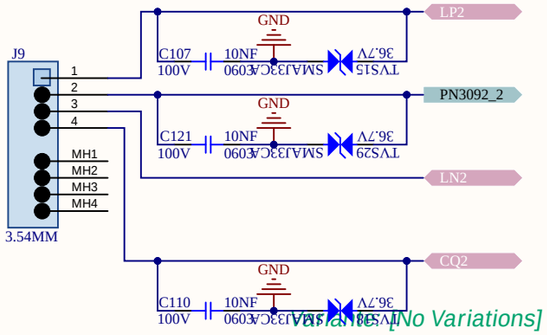

Variants: [No Variations]

Rev.	Description	Date	Name

	Date	Name
Editor	10.10.20	MuOz
Check	***	***
Ref.	***	***

Product

Schematic
Control Unit
v01

File
[10] - CONNECTORs.SchDoc

PCB-Number

Sheet Size	Date	Sheet:
A3	*	11 / 12

EEPROM

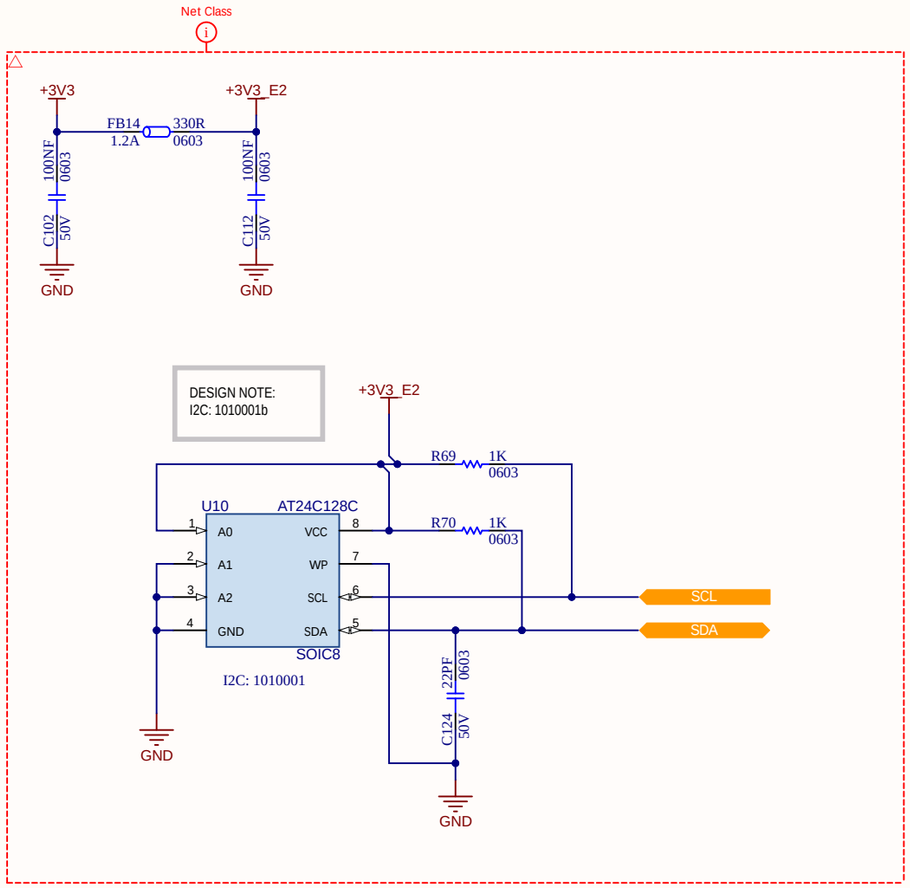

Variante: [No Variations]

					Date	Name	Product
				Editor	10.10.20	MuOz	
				Check	***	***	Schematic Control Unit v01
				Ref.	***	***	
							File [11] - EEPROM.SchDoc
							PCB-Number
				Sheet Size	Date		Sheet:
				A3	*		12 / 12
Rev.	Description	Date	Name				