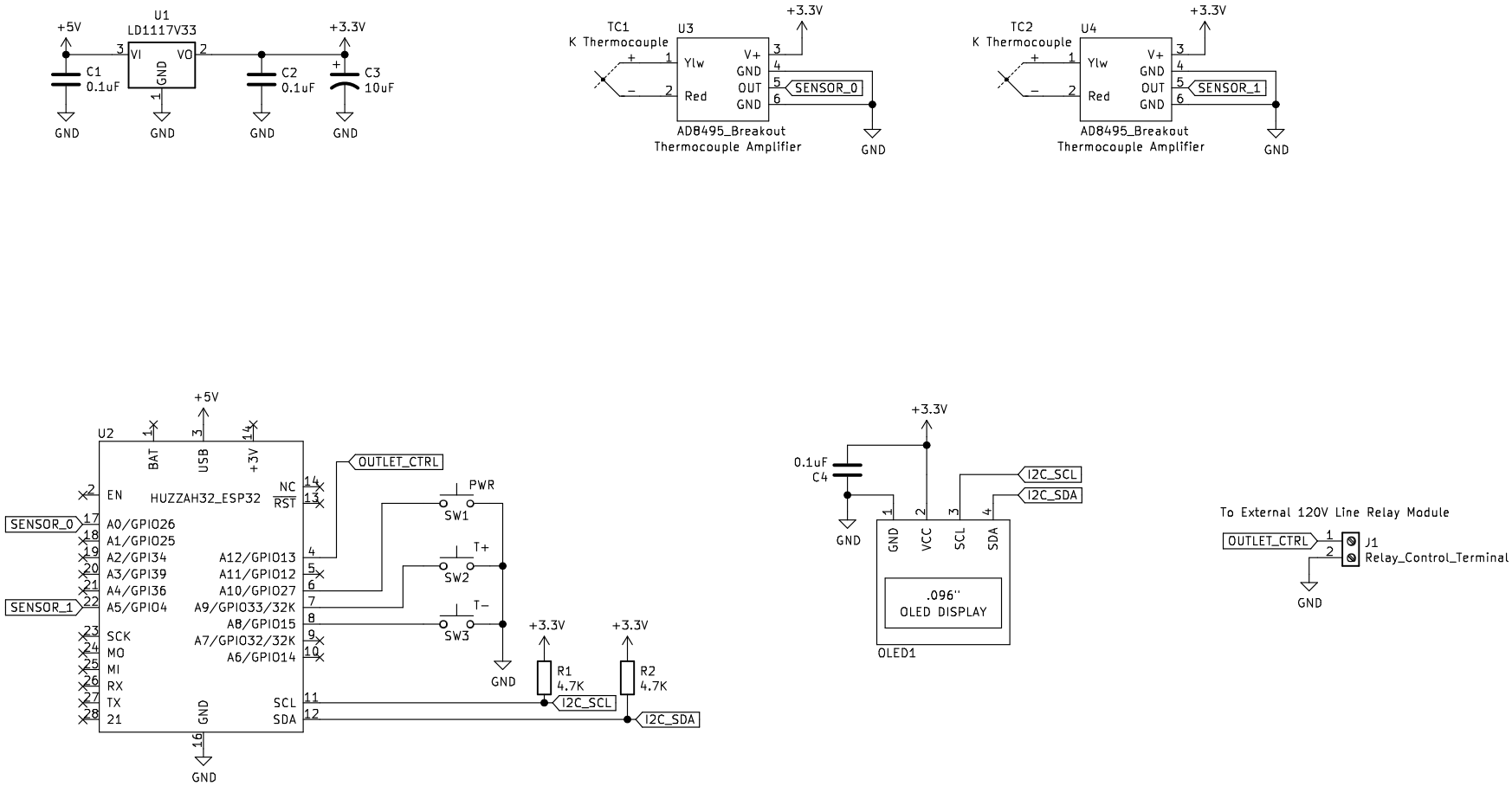

NOTES:
CIRCUIT REQUIRES 5V USB POWER SUPPLY CONNECTED TO HUZZAH32
AD8495_BREAKOUT TEMP(F) = (VOUT − 1.25)/0.009 + 32
SYSTEM CONTROLS EXTERNAL 120V LINE RELAY MODULE (ADAFRUIT 2935
ALL THERMOCOUPLES MUST BE K TYPE

Maeve Stites & Co.

Sheet: /
File: waxMelter.kicad_sch

Title: PID Thermocouple Controller for Wax Melting

Size: USLetter	Date: 2020-10-19	**Rev: Rev 1.0**
KiCad E.D.A. kicad (5.99.0-3636-gf745036d8)		Id: 1/1