Digital Relay Switch

mas-effects.com/relay-switch

v1.0 - 1.1

WHAT DOES THIS DO?

The digital relay switch kit from MAS Effects allows you to use a normally-open momentary button or switch to toggle a DPDT relay.

Example use cases include:

- Install a button on a console to remotely switch a signal
- Dynamically rearrange the order of a guitar pedal board
- Create A/B pedal with features not traditionally possible (*see below*)

FEATURES

- Switch 2 signals (DPDT), or more by combining multiple kits
- Tap to toggle, press and hold for a momentary burst
- Control with a soft touch foot switch or any SPST momentary button
- Drive 2 LEDs
- Remembers state between power on/off; uses EEPROM wear-leveling for maximum life span

GETTING HELP

For any questions or problems, visit our forum at mas-effects.com/support

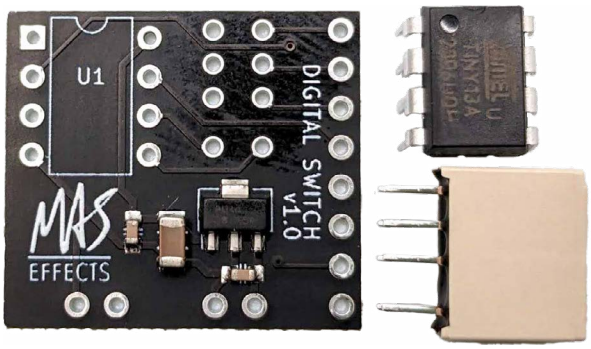

SPECIFICATIONS

Input voltage:	6V to 12V DC
Typical current:	4.7mA
Typical switching current:	15mA
Max switching current:	22mA
Required foot switch or button:	SPST, momentary, normally-open

TRUE BYPASS

While you could use this kit for true bypass on guitar effects pedals, we have a different, special-purpose kit which makes it a bit simpler.

The true bypass module connects your board's input to GND when bypassed, and is labeled for easier hook-up.

Get one at masfx.info/relay-bypass

HOW TO BUILD

1. INSTALL MICROCONTROLLER

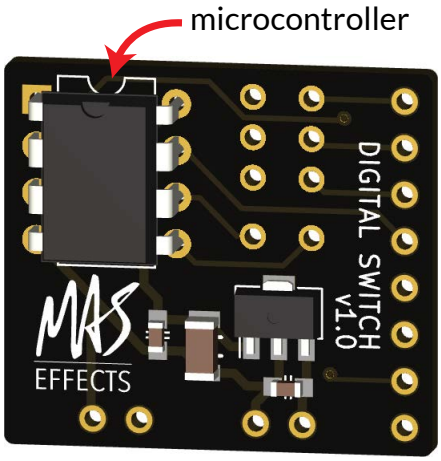

Solder the microcontroller to the PCB. Optionally solder an 8-pin DIP socket instead, and install the microcontroller in the socket.

Ensure the dot or the half-circle on the microcontroller is oriented UP as shown in this picture.

You may have received either an ATtiny13 or an ATtiny85. The differences don't matter for this application.

2. INSTALL RELAY

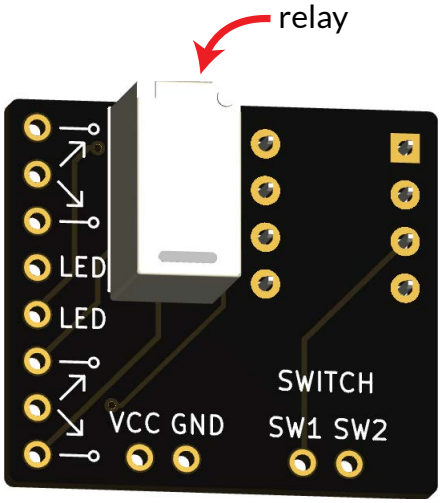

Flip the PCB over and insert and solder the relay.

Its orientation is important, but the non-symmetric spacing of its 1st and 8th pins ensure you install it correctly.

3. POWER

Connect a 6V to 12V DC power supply to the VCC and GND connectors.

A 9V battery, or a 2.1mm DC jack are popular options.

4. FOOT SWITCH OR BUTTON

Connect one side of your button or foot switch (*momentary, normally open*) to SW1.

Connect the other side to SW2 .

Orientation does not matter.

5. CONFIGURE AS NEEDED

The rest of the connections are optional, and you can choose how to configure this switching module.

Continue on to the next section to learn more.

UNDERSTANDING THE SWITCHING

OVERVIEW

The column of pads along the edge of the board can be thought of as three sections, shown here divided with a blue dashed line.

First you have a SPDT switch (*technically the first of two poles on the DPDT relay*). The middle pad is electrically connected to the pad above or below it.

Next you have two LED pads. One will be at 5V, and the other at 0V. Use these to drive one or two LEDs (*details on the following page*).

Finally, you have another SPDT switch.

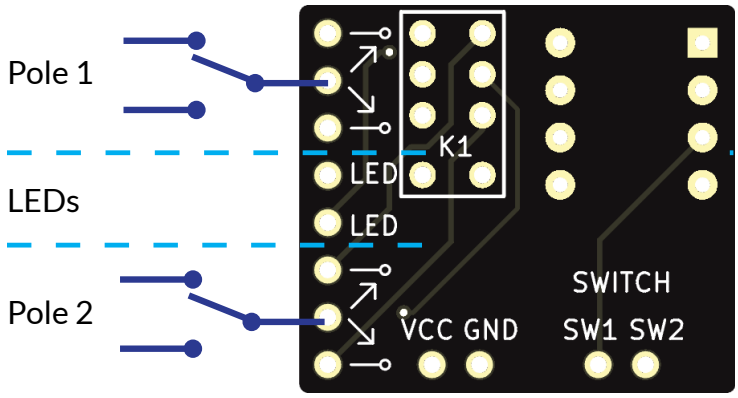

SWITCHING

In one position, the middle pad of each pole will be connected to the bottom pad, and the bottom LED will be on.

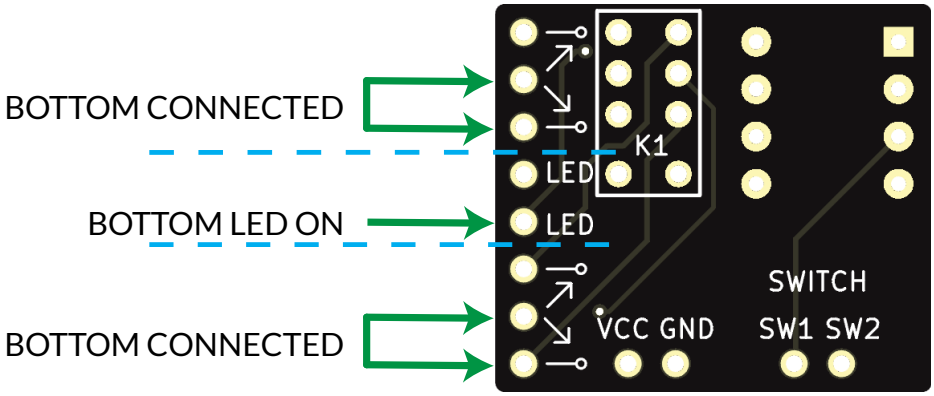

In the other, the middle pad of each pole will be connected to the top pad, and the top LED will be on.

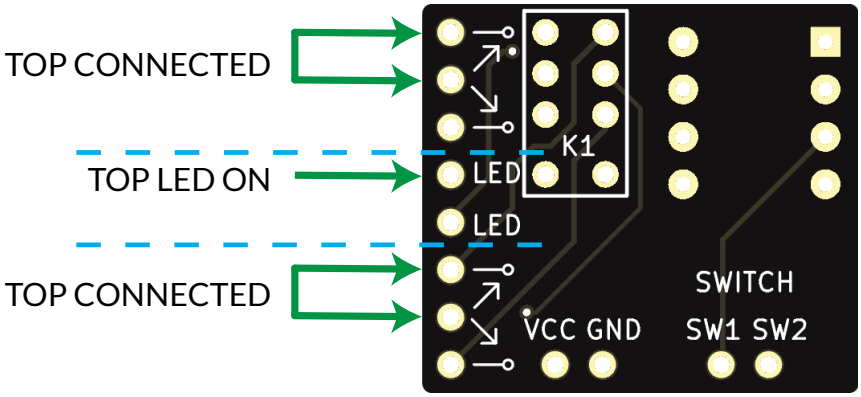

ADDING LEDS

The two LED pads will alternate between 0V and 5V each time the switch is toggled.

OPTION 1: DIRECT

Each LED pad is capable of driving a **single LED**. The simplest way to hook this up is shown here:

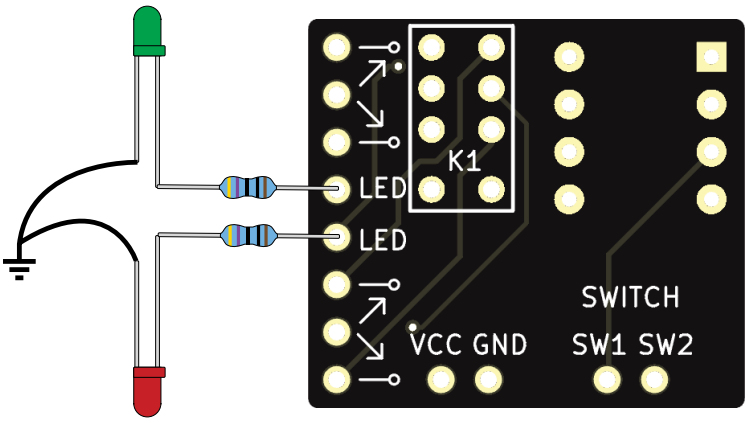

The anode (+) side of the LEDs connects through a resistor to the LED pad on the PCB.

The size of the resistors will depend on the color and size of your LEDs. Experiment to find a suitable value.

The cathode (-) side of the LEDs should be tied to a GND point such as your power supply's negative side.

This method also works great with common-cathode, bi-color LEDs.

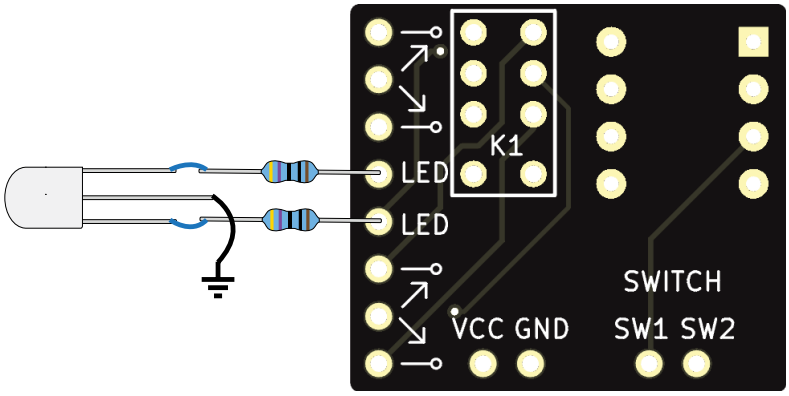

OPTION 2: TRANSISTOR

Use transistors to drive **multiple LEDs** or other types of indicators or situations that require high current or voltages above 5V. Here's an example of how you might do that.

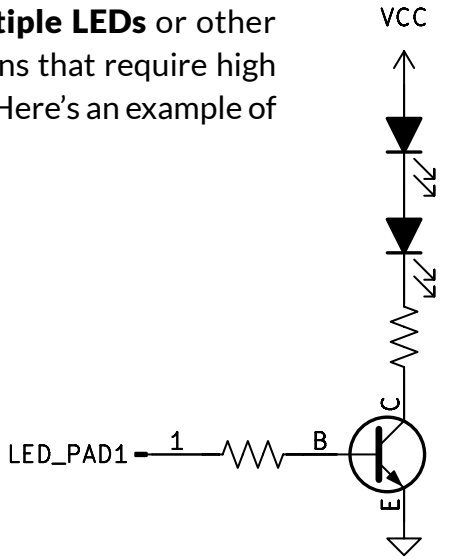

CUSTOMIZING

MULTIPLE KITS WITH ONE BUTTON OR SWITCH

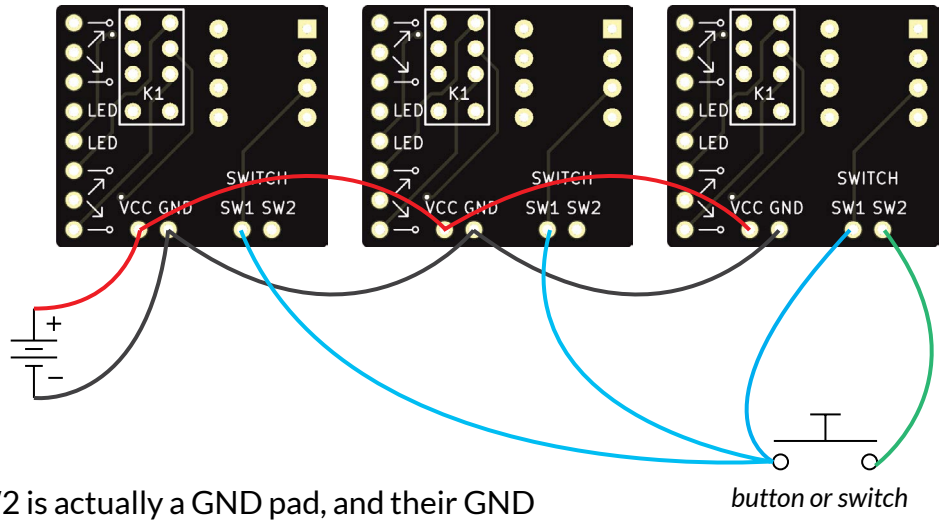

To switch more than 2 poles you can combine multiple kits.

Connect each PCB's VCC and GND to your power source.

Connect one side of your button or switch to SW1 on each PCB.

Connect the other side of your button or switch to SW2 on at least one of the PCBs. It does not need to be connected to each PCB since SW2 is actually a GND pad, and their GND net should already be connected for the power.

CHANGING BOOT MODE

When powering up the module, by default, it will remember and boot into the most recent switch position. To change this, hold down the button while plugging in power and it will cycle to the next mode and blink the LEDs to indicate its current mode.

To change it again, unplug and repeat.

- 3 blinks: boot into switch position 1
- 4 blinks: boot into switch position 2
- 5 blinks: remember switch position

OTHER CUSTOMIZATIONS

Some operational parameters can be easily tweaked before programming the microcontroller. e.g., switch timing, whether or not "hold for momentary" is enabled, etc. You can modify the source and customize it yourself (see appendix). Alternatively, reach out and we may be able to customize any kits you plan to order.

Some changes may require a fee, but most do not.

Reach out directly at mas-effects.com/contact or start a discussion in our forum at mas-effects.com/forum.

APPENDIX

SCHEMATIC

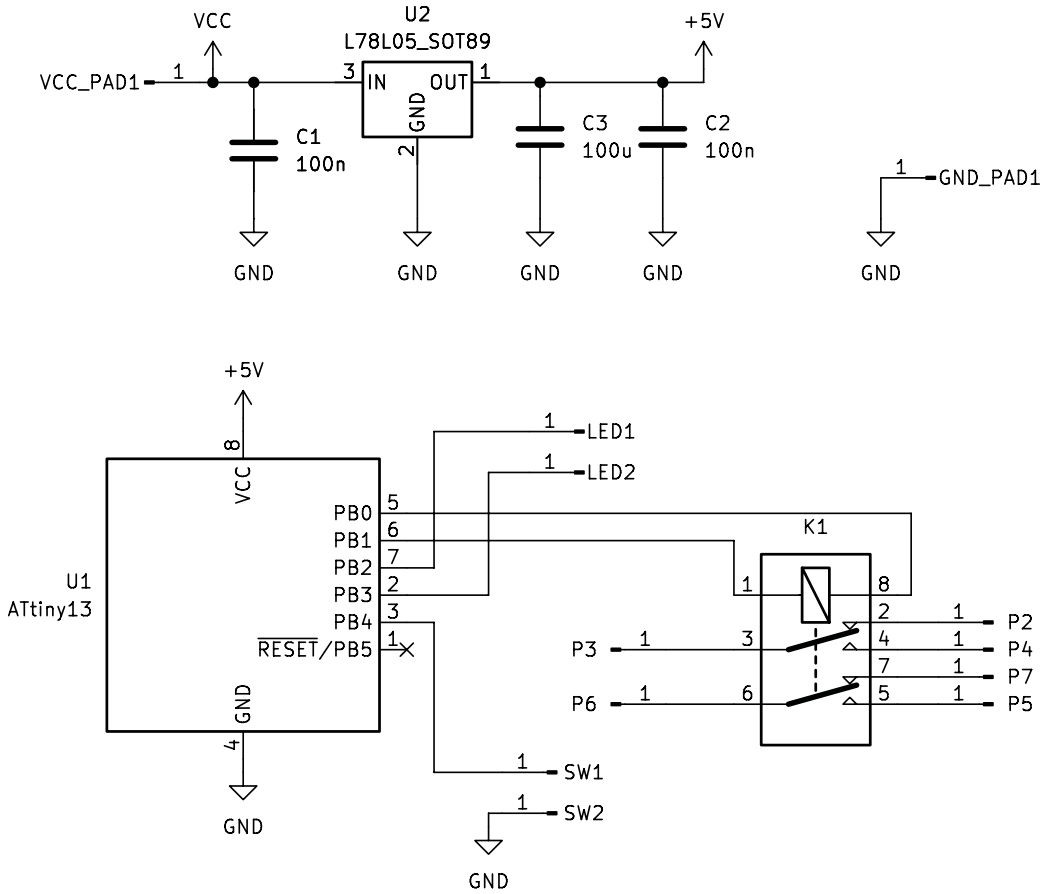

BILL OF MATERIALS (BOM)

Pre-soldered to PCB

C1, C2	100nF
C3	100uF
U2	L78L05

Included with kit

U1	ATtiny13 or ATtiny85
K1	FTR-B4CB4.5Z

Not included

SPST, normally-open, momentary switch or button

KIT REVISIONS

v1.0 Initial release

v1.1 Backwards-compatible changes to SMD part selection

DOCUMENT REVISIONS

2023-07-16 Initial release

2024-02-19 Fixed grammar. Removed extra word

2025-12-18 v1.1

SOURCE AND LICENSE

https://github.com/mstratman/digital-relay-switch

MIT License

Copyright (c) 2023 Mark A. Stratman <mark@mas-effects.com>

Permission is hereby granted, free of charge, to any person obtaining a copy of this software and associated documentation files (the "Software"), to deal in the Software without restriction, including without limitation the rights to use, copy, modify, merge, publish, distribute, sublicense, and/or sell copies of the Software, and to permit persons to whom the Software is furnished to do so, subject to the following conditions:

The above copyright notice and this permission notice shall be included in all copies or substantial portions of the Software.

THE SOFTWARE IS PROVIDED "AS IS", WITHOUT WARRANTY OF ANY KIND, EXPRESS OR IMPLIED, INCLUDING BUT NOT LIMITED TO THE WARRANTIES OF MERCHANTABILITY, FITNESS FOR A PARTICULAR PURPOSE AND NONINFRINGEMENT. IN NO EVENT SHALL THE AUTHORS OR COPYRIGHT HOLDERS BE LIABLE FOR ANY CLAIM, DAMAGES OR OTHER LIABILITY, WHETHER IN AN ACTION OF CONTRACT, TORT OR OTHERWISE, ARISING FROM, OUT OF OR IN CONNECTION WITH THE SOFTWARE OR THE USE OR OTHER DEALINGS IN THE SOFTWARE.