MASTER COPY IS ORIGINAL SIGNED COPY
ALL OTHER COPIES ARE UNCONTROLLED

FORM 180 A

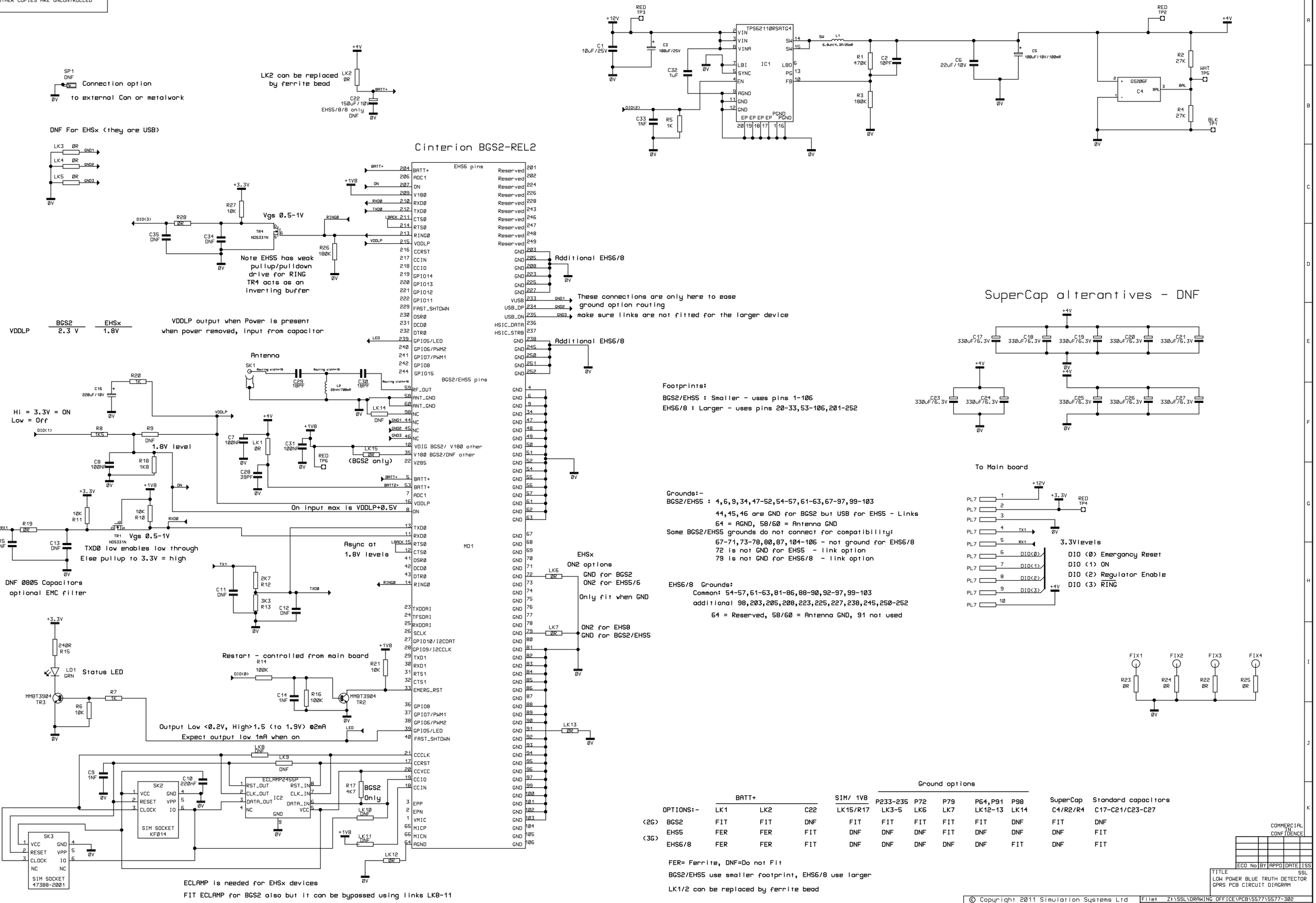

OPTIONS:-	BATT+ LK1	BATT+ LK2	BATT+ C22	SIM/ 1V8 LK15/R17	Ground options P233-235 LK3-5	Ground options P72 LK6	Ground options P79 LK7	Ground options P64,P91 LK12-13	Ground options P98 LK14	SuperCap C4/R2/R4	Standard capacitors C17-C21/C23-C27
(2G) BGS2	FIT	FIT	DNF	FIT	FIT	FIT	FIT	FIT	DNF	FIT	DNF
EHS5	FER	FER	FIT	DNF	DNF	DNF	FIT	DNF	DNF	DNF	FIT
(3G) EHS6/8	FER	FER	FIT	DNF	DNF	DNF	DNF	DNF	FIT	DNF	FIT

FER= Ferrite, DNF=Do not Fit

BGS2/EHS5 use smaller footprint, EHS6/8 use larger

LK1/2 can be replaced by ferrite bead

COMMERCIAL IN CONFIDENCE

ECO No	BY	APPD	DATE	ISS

TITLE
LOW POWER BLUE TRUTH DETECTOR
GPRS PCB CIRCUIT DIAGRAM

SSL

© Copyright 2011 Simulation Systems Ltd
Unit 12, Market Industrial Estate, Yatton, Bristol, BS49 4RF, England www.simulations-systems.co.uk

File: Z:\SSL\DRAWING OFFICE\PCB\5577\5577-302
Designer: JH
Reviewer:
Drawn: JH 09/12
Chkd:
Date:
Drg No:5577-302
SHT 1 of 1
Iss: Dev18