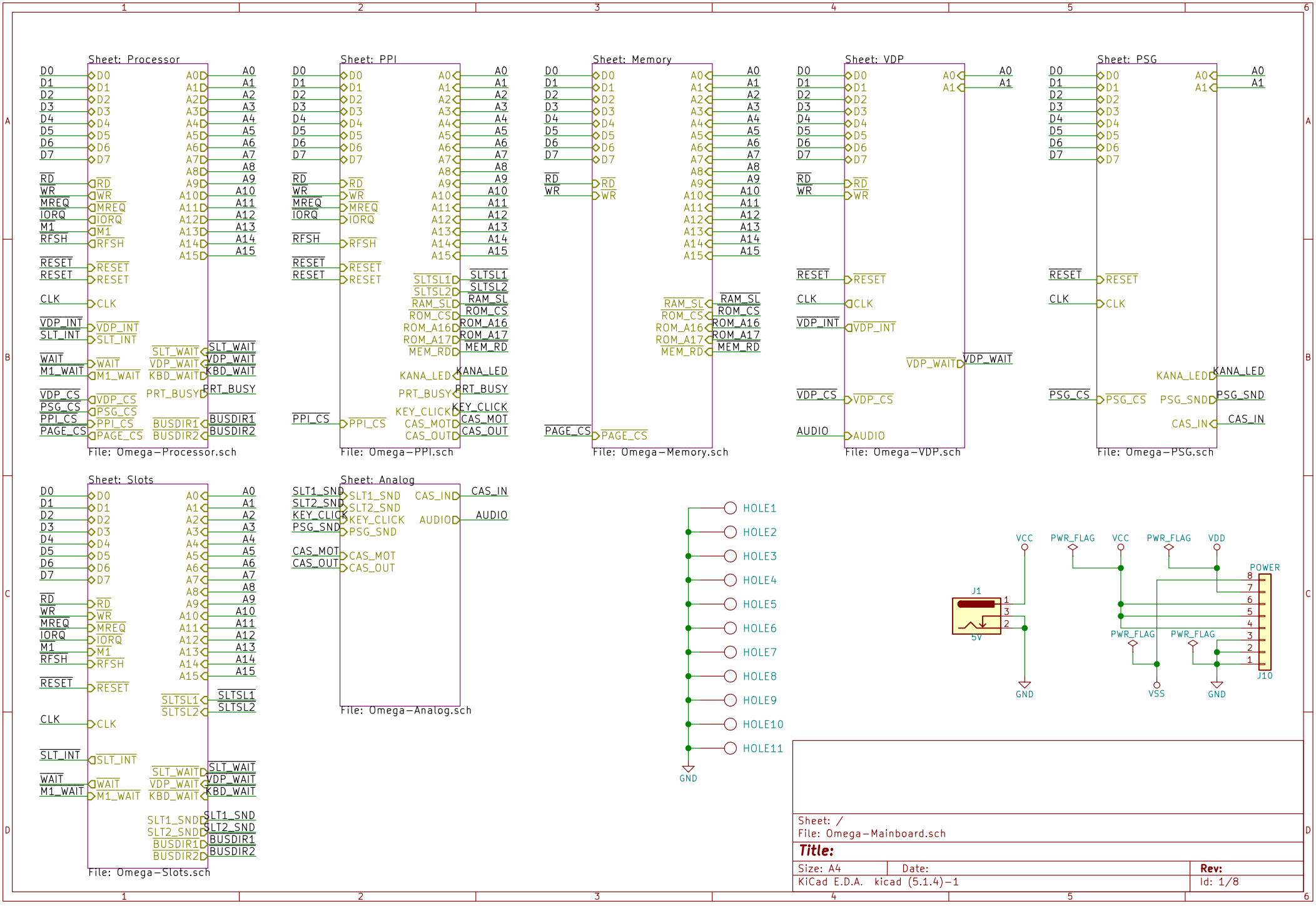
Sheet: Processor
File: Omega-Processor.sch
Sheet: PPI
File: Omega-PPI.sch
Sheet: Memory
File: Omega-Memory.sch
Sheet: VDP
File: Omega-VDP.sch
Sheet: PSG
File: Omega-PSG.sch
Sheet: Slots
File: Omega-Slots.sch
Sheet: Analog
File: Omega-Analog.sch
HOLE1
HOLE2
HOLE3
HOLE4
HOLE5
HOLE6
HOLE7
HOLE8
HOLE9
HOLE10
HOLE11
GND
VCC
PWR_FLAG
VDD
POWER
J1
5V
J10
VSS
Sheet: /
File: Omega-Mainboard.sch
Title:
Size: A4
Date:
Rev:
KiCad E.D.A. kicad (5.1.4)-1
Id: 1/8

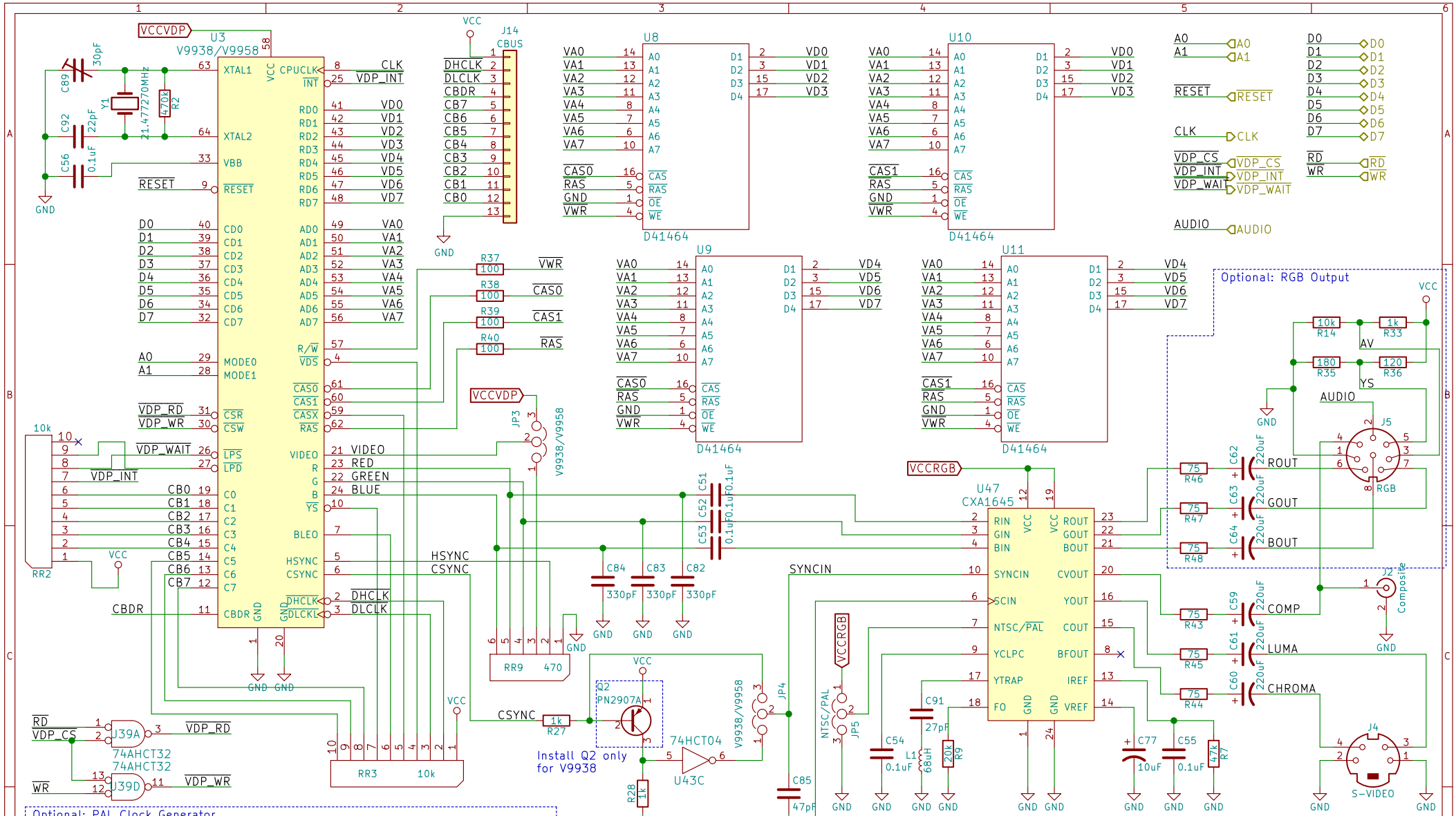
U3
V9938/V9958
VCCVDP
XTAL1
XTAL2
VBB
RESET
CPUCLK
INT
RD0
RD1
RD2
RD3
RD4
RD5
RD6
RD7
CD0
CD1
CD2
CD3
CD4
CD5
CD6
CD7
MODE0
MODE1
CSR
CSW
LPS
LPD
C0
C1
C2
C3
C4
C5
C6
C7
CBDR
R/W
VDS
CAS0
CAS1
CASX
RAS
VIDEO
R
G
B
YS
BLEO
HSYNC
CSYNC
DHCLK
DLCLK
GND
VCC
CLK
VDP_INT
VDP_RD
VDP_WR
VDP_WAIT
CB0
CB1
CB2
CB3
CB4
CB5
CB6
CB7
RED
GREEN
BLUE
Y1
21.477270MHz
C89
30pF
C92
22pF
C56
0.1uF
R2
470k
J14
CBUS
DHCLK
DLCLK
CBDR
CB7
CB6
CB5
CB4
CB3
CB2
CB1
CB0
U8
U9
U10
U11
D41464
VA0
VA1
VA2
VA3
VA4
VA5
VA6
VA7
CAS0
CAS1
RAS
GND
VWR
VD0
VD1
VD2
VD3
VD4
VD5
VD6
VD7
R37
R38
R39
R40
100
VWR
CAS0
CAS1
RAS
JP3
V9938/V9958
RR2
10k
RR9
470
RR3
10k
U39A
U39D
74AHCT32
74AHCT32
RD
VDP_CS
WR
VDP_RD
VDP_WR
Q2
PN2907A
Install Q2 only
for V9938
R27
1k
R28
1k
74HCT04
U43C
JP4
C85
47pF
SYNCIN
VCCRGB
NTSC/PAL
JP5
U47
CXA1645
RIN
GIN
BIN
SYNCIN
SCIN
NTSC/PAL
YCLPC
YTRAP
FO
ROUT
GOUT
BOUT
CVOUT
YOUT
COUT
BFOUT
IREF
VREF
C51
C52
C53
0.1uF
C84
C83
C82
330pF
C91
27pF
C54
0.1uF
L1
68uH
R9
20k
C77
10uF
C55
0.1uF
R7
47k
C94
4.7pF
R25
2.2k
JP6
U39B
74AHCT32
CLK
Optional: RGB Output
R14
10k
R33
1k
AV
R35
180
R36
120
YS
AUDIO
J5
RGB
R46
R47
R48
75
C62
C63
C64
220uF
ROUT
GOUT
BOUT
J2
Composite
R43
R45
R44
C59
C61
C60
COMP
LUMA
CHROMA
J4
S-VIDEO
Optional: PAL Clock Generator
C93
22pF
Y3
4.433618MHz
C90
30pF
R30
1k
R1
1M
74HCT04
U43A
U43B
U43D
U43E
U43F
PAL_CLK
A0
A1
RESET
CLK
VDP_CS
VDP_INT
VDP_WAIT
AUDIO
D0
D1
D2
D3
D4
D5
D6
D7
RD
WR
JP3, JP4: 1–2: V9938; 2–3: V9958 (Use a wire link)
JP4, JP5: 1–2: NTSC; 2–3: PAL (Use a wire link)
PAL: R9 – 16k, C91 – 18pF
R9 – Tolerance 1%
PCB Layout Notes:
Keep trace length between CXA1645 and 75 ohm resistors to minimum
CXA1645 bypass capacitors: VCC1(12), VREF(14) -> GND1(1), VCC2(19) -> GND2(24)
Sheet: /VDP/
File: Omega-VDP.sch
Title:
Size: A4
Date:
Rev:
KiCad E.D.A. kicad (5.1.4)-1
Id: 2/8

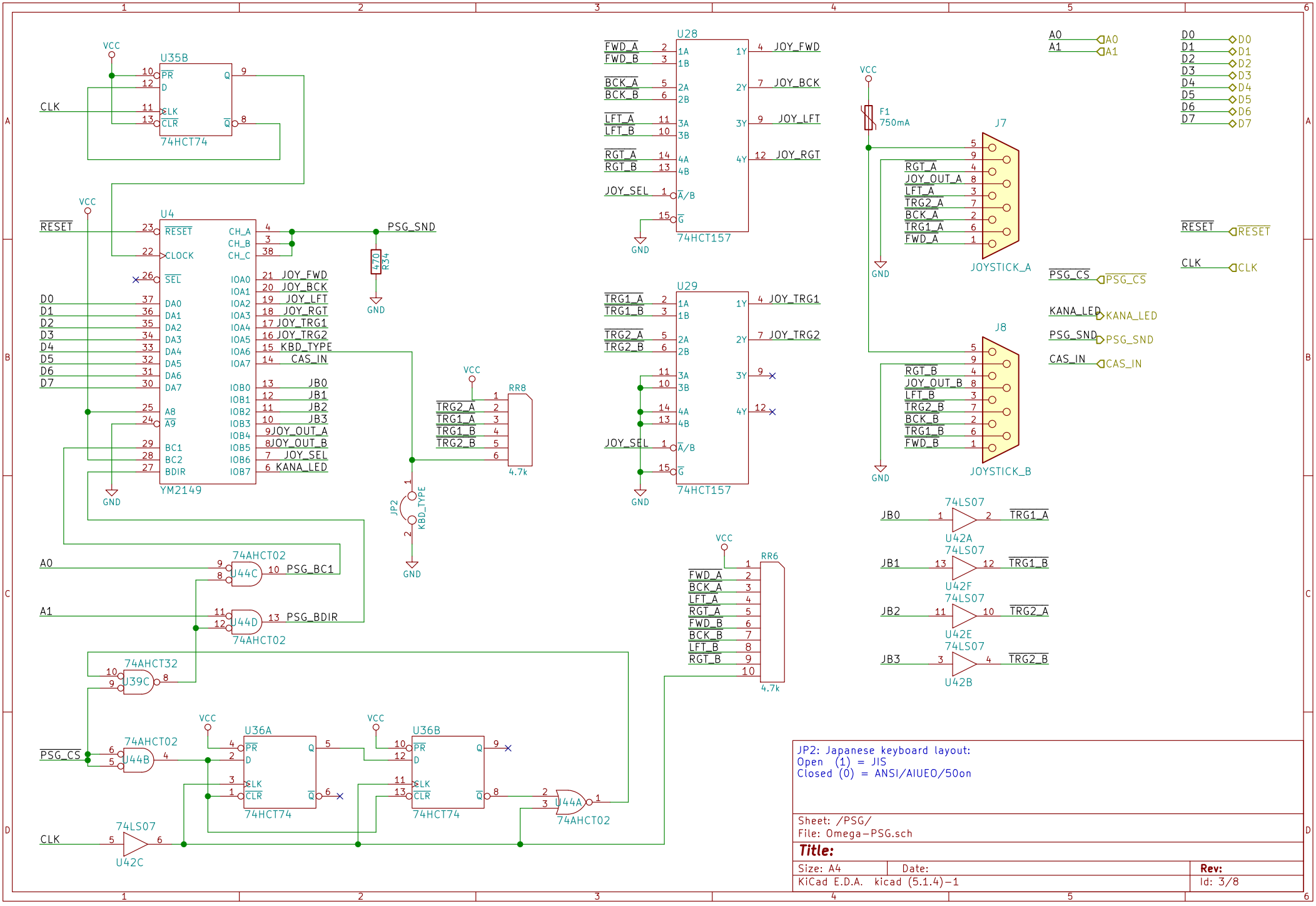

JP2: Japanese keyboard layout:
Open (1) = JIS
Closed (0) = ANSI/AIUEO/50on

Sheet: /PSG/
File: Omega-PSG.sch

Title:

Size: A4	Date:	Rev:
KiCad E.D.A. kicad (5.1.4)-1		Id: 3/8

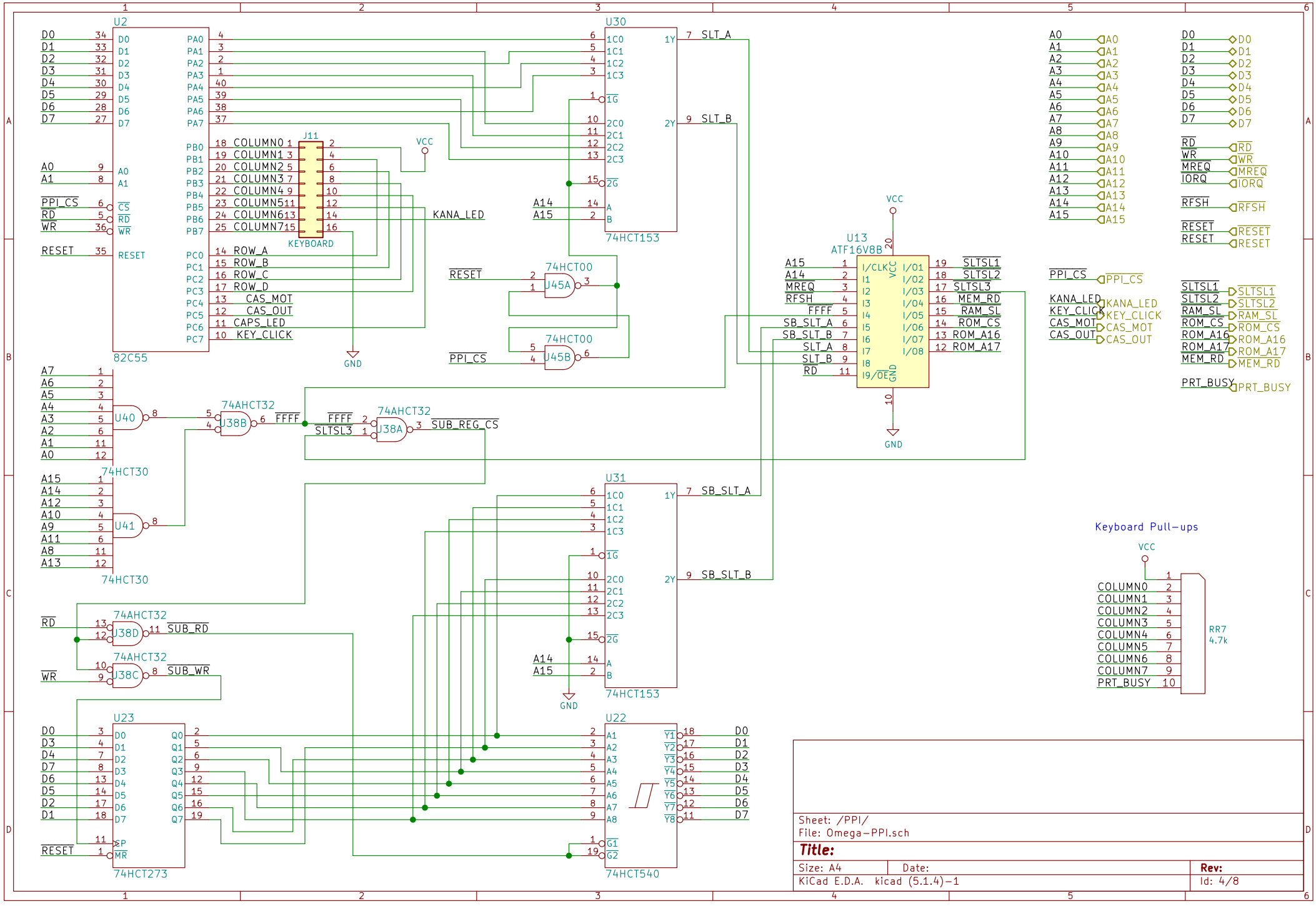
U2
82C55
U30
74HCT153
U31
74HCT153
U13
ATF16V8B
J11
KEYBOARD
74HCT00
U45A
U45B
74AHCT32
U38A
U38B
U38C
U38D
U40
74HCT30
U41
U23
74HCT273
U22
74HCT540
VCC
GND
KANA_LED
SLT_A
SLT_B
SB_SLT_A
SB_SLT_B
SUB_REG_CS
SUB_RD
SUB_WR
Keyboard Pull-ups
RR7
4.7k
Sheet: /PPI/
File: Omega-PPI.sch
Title:
Size: A4
Date:
Rev:
KiCad E.D.A. kicad (5.1.4)-1
Id: 4/8

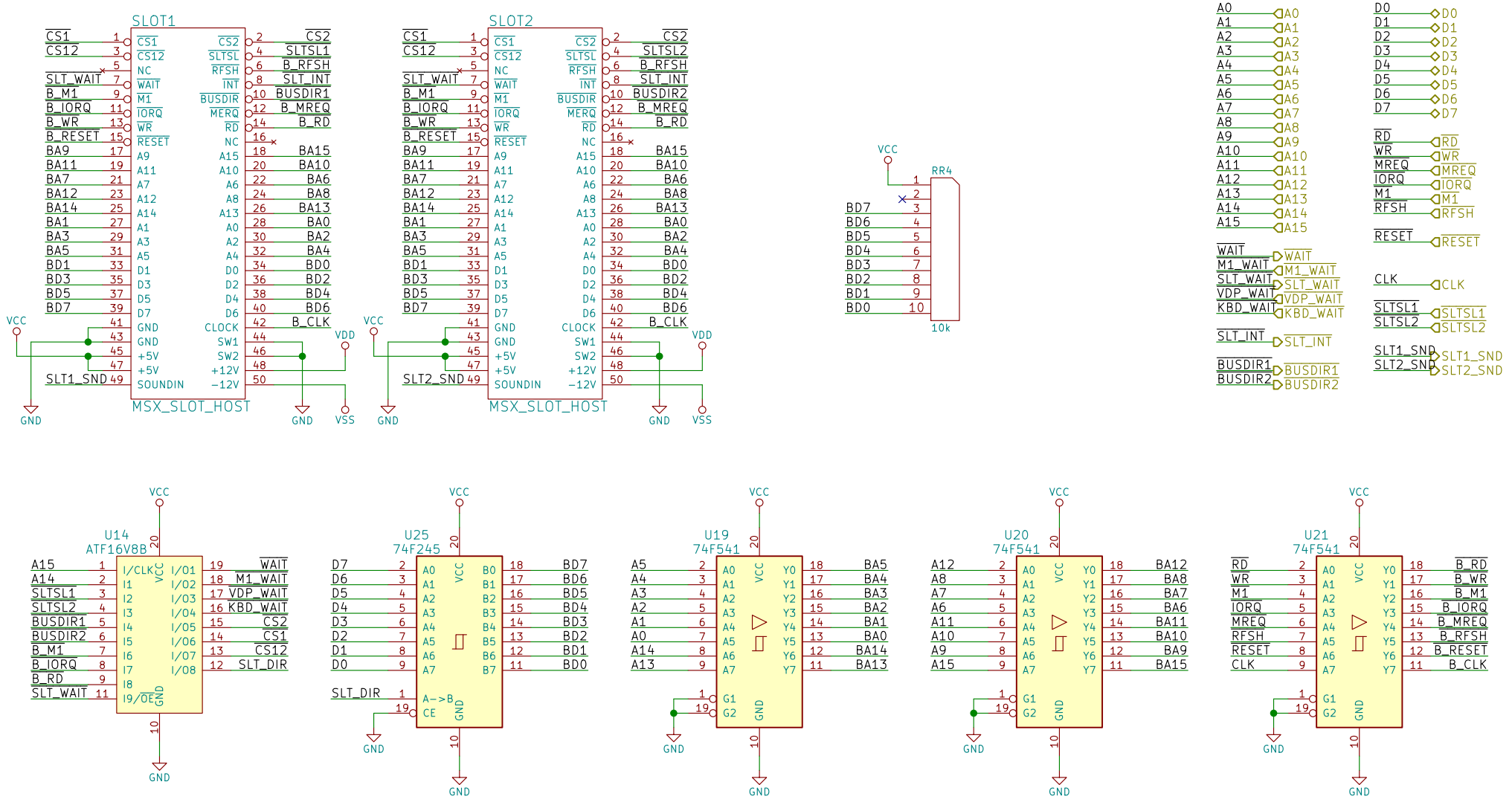

Sheet: /Slots/
File: Omega-Slots.sch

Title:

Size: A4	Date:	Rev:
KiCad E.D.A. kicad (5.1.4)-1		Id: 5/8

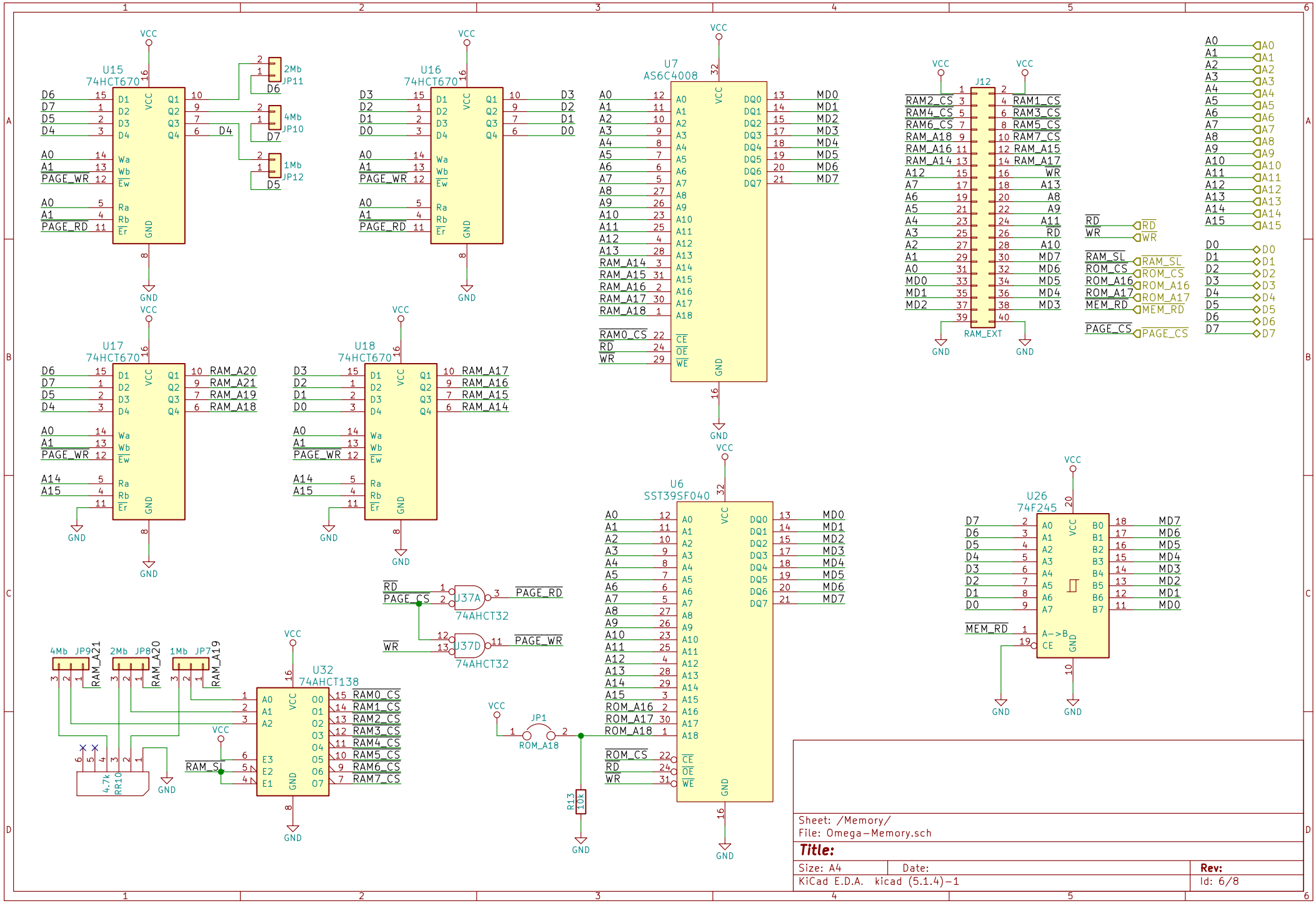
U15
74HCT670
U16
74HCT670
U7
AS6C4008
J12
RAM_EXT
U17
74HCT670
U18
74HCT670
U6
SST39SF040
U26
74F245
U37A
74AHCT32
U37D
74AHCT32
U32
74AHCT138
JP1
ROM_A18
R13
10k
RR10
4.7k
VCC
GND
Sheet: /Memory/
File: Omega-Memory.sch
Title:
Size: A4
Date:
Rev:
KiCad E.D.A. kicad (5.1.4)-1
Id: 6/8

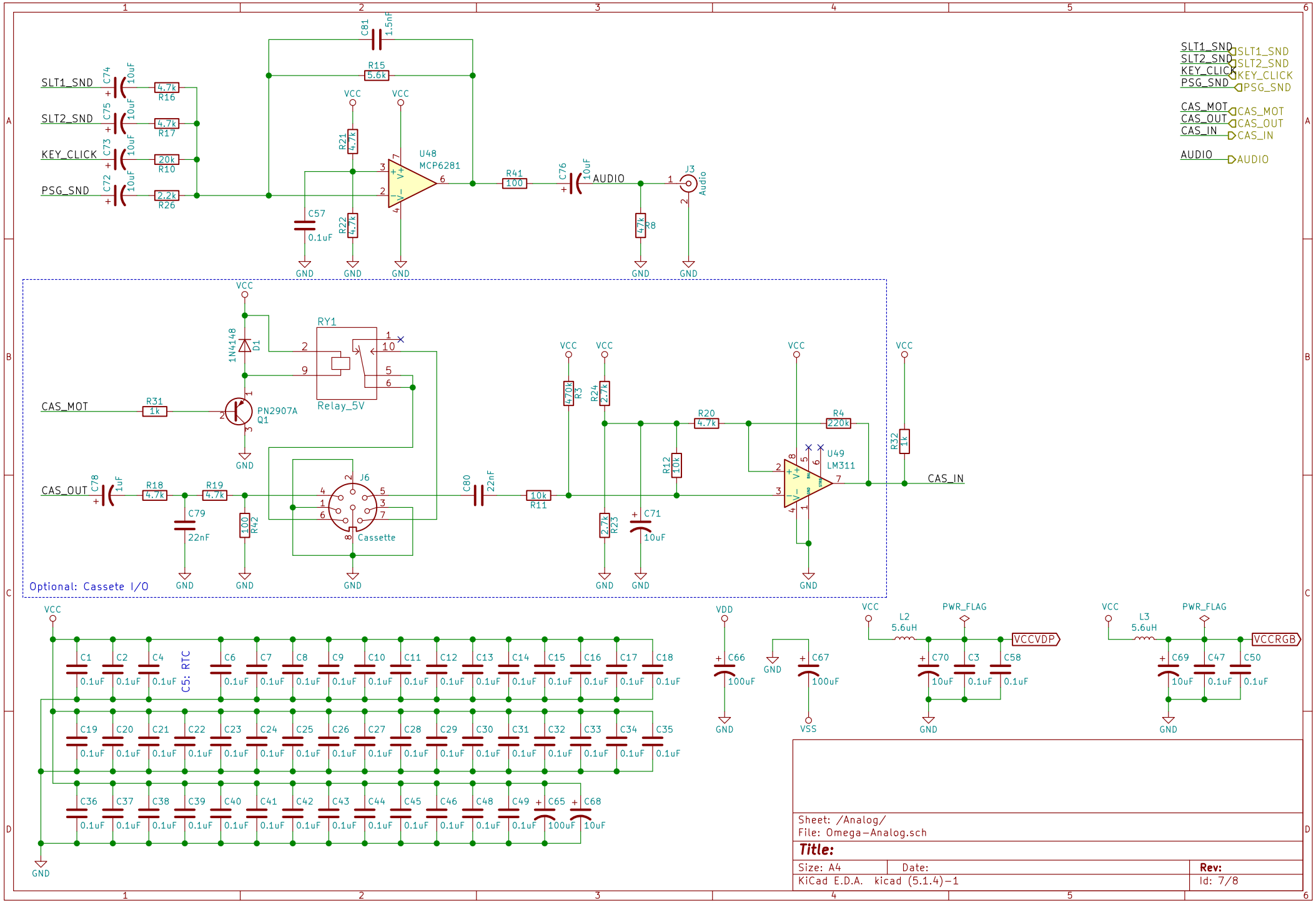

Sheet: /Analog/
File: Omega-Analog.sch

Title:

Size: A4	Date:	Rev:
KiCad E.D.A. kicad (5.1.4)-1		Id: 7/8

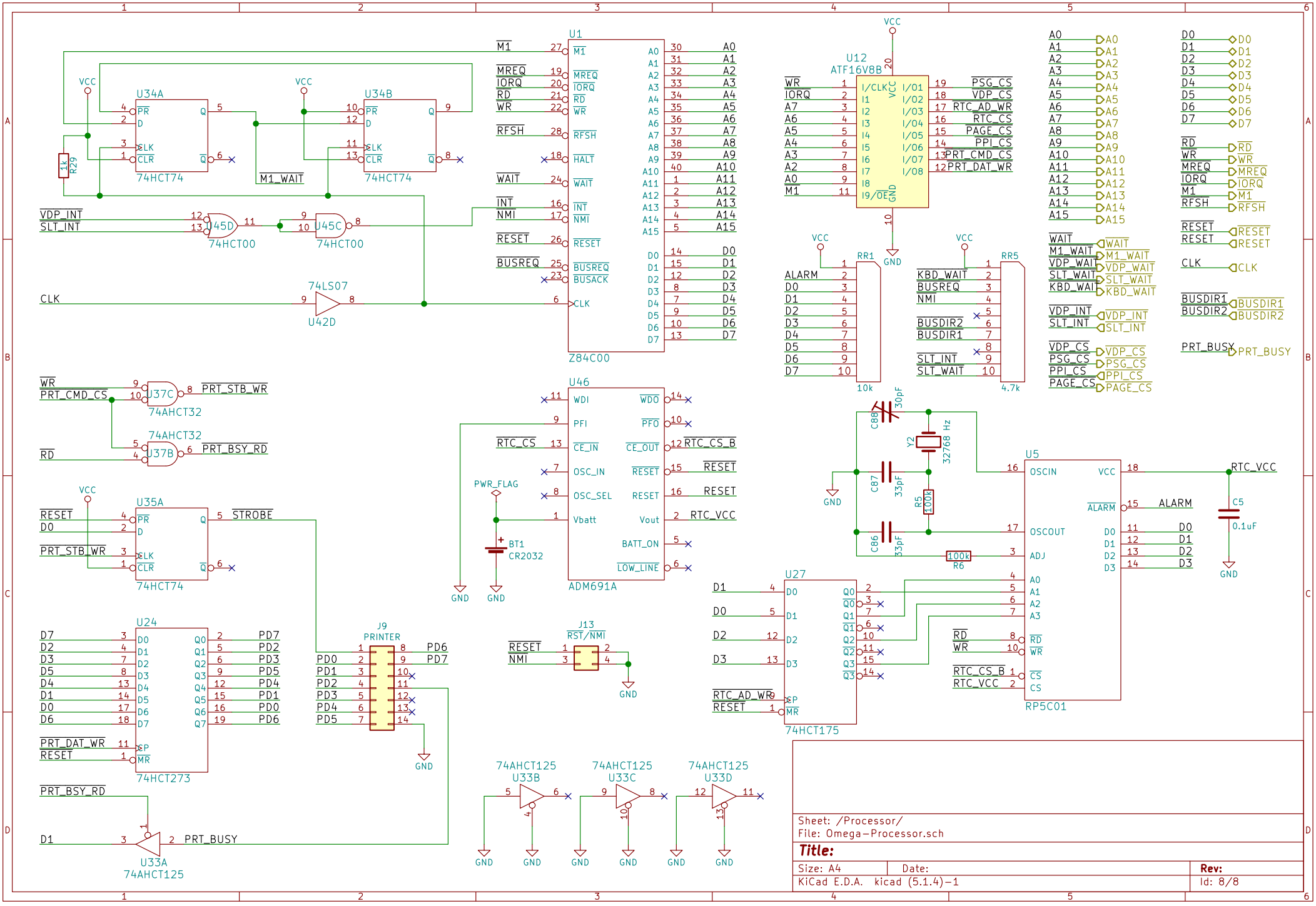
U1
Z84C00
U12
ATF16V8B
U34A
74HCT74
U34B
74HCT74
U45D
74HCT00
U45C
74HCT00
74LS07
U42D
U37C
74AHCT32
U37B
74AHCT32
U35A
74HCT74
U24
74HCT273
U46
ADM691A
BT1
CR2032
U27
74HCT175
U5
RP5C01
RR1
10k
RR5
4.7k
J9
PRINTER
J13
RST/NMI
U33A
74AHCT125
U33B
74AHCT125
U33C
74AHCT125
U33D
74AHCT125
Y2
32768 Hz
C88
30pF
C87
33pF
C86
33pF
R5
100k
R6
100k
C5
0.1uF
R29
1k
VCC
GND
M1_WAIT
VDP_INT
SLT_INT
CLK
PRT_CMD_CS
PRT_STB_WR
PRT_BSY_RD
PRT_BUSY
RTC_CS
RTC_CS_B
RTC_VCC
RTC_AD_WR
PWR_FLAG
STROBE
ALARM
Sheet: /Processor/
File: Omega-Processor.sch
Title:
Size: A4
Date:
Rev:
KiCad E.D.A. kicad (5.1.4)-1
Id: 8/8