EG915U Series

Hardware Design

LTE Standard Module Series

Version: 1.1

Date: 2023-01-17

Status: Released

At Quectel, our aim is to provide timely and comprehensive services to our customers. If you require any assistance, please contact our headquarters:

Quectel Wireless Solutions Co., Ltd.
Building 5, Shanghai Business Park Phase III (Area B), No.1016 Tianlin Road, Minhang District, Shanghai 200233, China
Tel: +86 21 5108 6236
Email: info@quectel.com

Or our local offices. For more information, please visit:
http://www.quectel.com/support/sales.htm.

For technical support, or to report documentation errors, please visit:
http://www.quectel.com/support/technical.htm.
Or email us at: support@quectel.com.

Legal Notices

We offer information as a service to you. The provided information is based on your requirements and we make every effort to ensure its quality. You agree that you are responsible for using independent analysis and evaluation in designing intended products, and we provide reference designs for illustrative purposes only. Before using any hardware, software or service guided by this document, please read this notice carefully. Even though we employ commercially reasonable efforts to provide the best possible experience, you hereby acknowledge and agree that this document and related services hereunder are provided to you on an “as available” basis. We may revise or restate this document from time to time at our sole discretion without any prior notice to you.

Use and Disclosure Restrictions

License Agreements

Documents and information provided by us shall be kept confidential, unless specific permission is granted. They shall not be accessed or used for any purpose except as expressly provided herein.

Copyright

Our and third-party products hereunder may contain copyrighted material. Such copyrighted material shall not be copied, reproduced, distributed, merged, published, translated, or modified without prior written consent. We and the third party have exclusive rights over copyrighted material. No license shall be granted or conveyed under any patents, copyrights, trademarks, or service mark rights. To avoid ambiguities, purchasing in any form cannot be deemed as granting a license other than the normal non-exclusive, royalty-free license to use the material. We reserve the right to take legal action for noncompliance with abovementioned requirements, unauthorized use, or other illegal or malicious use of the material.

Trademarks

Except as otherwise set forth herein, nothing in this document shall be construed as conferring any rights to use any trademark, trade name or name, abbreviation, or counterfeit product thereof owned by Quectel or any third party in advertising, publicity, or other aspects.

Third-Party Rights

This document may refer to hardware, software and/or documentation owned by one or more third parties ("third-party materials"). Use of such third-party materials shall be governed by all restrictions and obligations applicable thereto.

We make no warranty or representation, either express or implied, regarding the third-party materials, including but not limited to any implied or statutory, warranties of merchantability or fitness for a particular purpose, quiet enjoyment, system integration, information accuracy, and non-infringement of any third-party intellectual property rights with regard to the licensed technology or use thereof. Nothing herein constitutes a representation or warranty by us to either develop, enhance, modify, distribute, market, sell, offer for sale, or otherwise maintain production of any our products or any other hardware, software, device, tool, information, or product. We moreover disclaim any and all warranties arising from the course of dealing or usage of trade.

Privacy Policy

To implement module functionality, certain device data are uploaded to Quectel's or third-party's servers, including carriers, chipset suppliers or customer-designated servers. Quectel, strictly abiding by the relevant laws and regulations, shall retain, use, disclose or otherwise process relevant data for the purpose of performing the service only or as permitted by applicable laws. Before data interaction with third parties, please be informed of their privacy and data security policy.

Disclaimer

a) We acknowledge no liability for any injury or damage arising from the reliance upon the information.
b) We shall bear no liability resulting from any inaccuracies or omissions, or from the use of the information contained herein.
c) While we have made every effort to ensure that the functions and features under development are free from errors, it is possible that they could contain errors, inaccuracies, and omissions. Unless otherwise provided by valid agreement, we make no warranties of any kind, either implied or express, and exclude all liability for any loss or damage suffered in connection with the use of features and functions under development, to the maximum extent permitted by law, regardless of whether such loss or damage may have been foreseeable.
d) We are not responsible for the accessibility, safety, accuracy, availability, legality, or completeness of information, advertising, commercial offers, products, services, and materials on third-party websites and third-party resources.

Copyright © Quectel Wireless Solutions Co., Ltd. 2023. All rights reserved.

Safety Information

The following safety precautions must be observed during all phases of operation, such as usage, service or repair of any cellular terminal or mobile incorporating the module. Manufacturers of the cellular terminal should notify users and operating personnel of the following safety information by incorporating these guidelines into all manuals of the product. Otherwise, Quectel assumes no liability for customers' failure to comply with these precautions.

	Full attention must be paid to driving at all times in order to reduce the risk of an accident. Using a mobile while driving (even with a handsfree kit) causes distraction and can lead to an accident. Please comply with laws and regulations restricting the use of wireless devices while driving.
	Switch off the cellular terminal or mobile before boarding an aircraft. The operation of wireless appliances in an aircraft is forbidden to prevent interference with communication systems. If there is an Airplane Mode, it should be enabled prior to boarding an aircraft. Please consult the airline staff for more restrictions on the use of wireless devices on an aircraft.
	Wireless devices may cause interference on sensitive medical equipment, so please be aware of the restrictions on the use of wireless devices when in hospitals, clinics or other healthcare facilities.
	Cellular terminals or mobiles operating over radio signal and cellular network cannot be guaranteed to connect in certain conditions, such as when the mobile bill is unpaid or the (U)SIM card is invalid. When emergency help is needed in such conditions, use emergency call if the device supports it. In order to make or receive a call, the cellular terminal or mobile must be switched on in a service area with adequate cellular signal strength. In an emergency, the device with emergency call function cannot be used as the only contact method considering network connection cannot be guaranteed under all circumstances.
	The cellular terminal or mobile contains a transceiver. When it is ON, it receives and transmits radio frequency signals. RF interference can occur if it is used close to TV sets, radios, computers or other electric equipment.
	In locations with explosive or potentially explosive atmospheres, obey all posted signs and turn off wireless devices such as mobile phone or other cellular terminals. Areas with explosive or potentially explosive atmospheres include fuelling areas, below decks on boats, fuel or chemical transfer or storage facilities, and areas where the air contains chemicals or particles such as grain, dust or metal powders.

About the Document

Revision History

Version	Date	Author	Description
-	2021-12-20	Len CHEN/Manimo YANG/ Ailsa WANG/Yunsheng LI	Creation of the document
1.0	2022-01-05	Len CHEN/Manimo YANG/ Ailsa WANG/Yunsheng LI	First official release
1.1	2023-01-17	Len CHEN/Evan WANG	1. Added the description on test points for VDD_EXT, PWRKEY, RESET_N, USB interface, USIM2_DET, Debug UART interface, and USB_BOOT. 2. Updated the information on USB serial drivers; Added SMTP and SMTPS as supported protocols (Table 4). 3. Changed the ADC minimum voltage from 0.1 V to 0 V and updated note 3 (Tables 6 and 22). 4. Added the current requirements for GSM or GSM & LTE and for LTE only; Updated power supply reference design (Chapter 3.5.2). 5. Added a 10 nF capacitor in the reference circuits controlling PWRKEY and RESET_IN with a button (Figures 11 and 16). 6. Added the description of analog output channel used as loudspeaker and handset (Chapter 4.1). 7. Updated the reference design for earpiece interface (Figure 19). 8. Added the timing of the short frame mode of PCM interface; Deleted the external

	clock scheme of codec chip and added note 3 on clock signal (Chapter 4.5). 9. Updated power consumption (Chapter 6.3). 10. Updated the recommended values of ramp-to-soak slope in soak zone, ramp-up slope and cool-down slope in reflow zone and add a note (Chapter 8.2). 11. Added mounting direction (Chapter 8.3.4).

Contents

Safety Information **3**
About the Document **4**
Contents **6**
Table Index **9**
Figure Index **11**

1 Introduction **13**
1.1. Special Mark 13

2 Product Overview **14**
2.1. Frequency Bands and Functions 14
2.2. Key Features 15
2.3. Functional Diagram 17
2.4. Pin Assignment 19
2.5. Pin Description 20
2.6. EVB Kit 28

3 Operating Characteristics **29**
3.1. Operating Modes 29
3.2. Sleep Mode 30
3.2.1. UART Application Scenario 30
3.2.2. USB Application Scenario 31
3.2.2.1. USB Application with USB Remote Wakeup Function 31
3.2.2.2. USB Application with USB Suspend/Resume and MAIN_RI Function 31
3.2.2.3. USB Application without USB Suspend Function 32
3.3. Airplane Mode 33
3.3.1. Hardware 33
3.3.2. Software 34
3.4. PSM 34
3.5. Power Supply 35
3.5.1. Power Supply Pins 35
3.5.2. Reference Design for Power Supply 35
3.5.3. Voltage Stability Requirements 36
3.6. Turn On 37
3.6.1. Turn On with PWPKEY 37
3.7. Turn Off 40
3.7.1. Turn Off with PWPKEY 40
3.7.2. Turn Off with AT Command 41
3.8. Reset 41

4 Application Interfaces **44**
4.1. Analog Audio Interfaces 44
4.1.1. Audio Interfaces Design Considerations 44

4.1.2. Microphone Interface Design 45
4.1.3. Earpiece Interface Design 46
4.2. USB Interface 46
4.3. USB_BOOT Interface 48
4.4. (U)SIM Interfaces 49
4.5. I2C and PCM Interfaces 51
4.6. UART Interfaces 53
4.7. ADC Interfaces 55
4.8. SPI 56
4.9. Indication Signals 57
4.9.1. NET_STATUS 57
4.9.2. STATUS 58
4.9.3. MAIN_RI 58

5 Antenna Interfaces 60
5.1. Main Antenna and Bluetooth/Wi-Fi Scan Antenna Interfaces 60
5.1.1. Pin Definition 60
5.1.2. Operating Frequency 60
5.1.3. Reference Design of Antenna Interfaces 62
5.1.4. RF Routing Guidelines 63
5.2. Antenna Installation 65
5.2.1. Antenna Design Requirement 65
5.2.2. RF Connector Recommendation 66

6 Electrical Characteristics and Reliability 68
6.1. Absolute Maximum Ratings 68
6.2. Power Supply Ratings 69
6.3. Power Consumption 69
6.4. Tx Power 77
6.5. Rx Sensitivity 78
6.6. ESD Protection 80
6.7. Operating and Storage Temperatures 80

7 Mechanical Information 81
7.1. Mechanical Dimensions 81
7.2. Recommended Footprint 83
7.3. Top and Bottom Views 84

8 Storage, Manufacturing, and Packaging 85
8.1. Storage Conditions 85
8.2. Manufacturing and Soldering 86
8.3. Packaging Specifications 88
8.3.1. Carrier Tape 88
8.3.2. Plastic Reel 89
8.3.3. Mounting Direction 89
8.3.4. Packaging Process 90

9 Appendix References 91

Table Index

Table 1: Special Mark 13
Table 2: Brief Introduction of the Module 14
Table 3: Frequency Bands 14
Table 4: Key Features 15
Table 5: I/O Parameters Definition 20
Table 6: Pin Description 20
Table 7: Overview of Operating Modes 29
Table 8: Pin Definition of PSM_IND and PSM_EINT 34
Table 9: Pin Definition of Power Supply 35
Table 10: Pin Definition of PWRKEY 37
Table 11: Pin Definition of RESET_N 41
Table 12: Pin Definition of Analog Audio Interfaces 44
Table 13: Functions of USB Interface 46
Table 14: Pin Definition of USB Interface 47
Table 15: Pin Definition of USB_BOOT Interface 48
Table 16: Pin Definition of (U)SIM Interfaces 49
Table 17: Pin Definition of I2C and PCM Interfaces 52
Table 18: Pin Definition of Main UART Interface 53
Table 19: Pin Definition of Debug UART Interface 54
Table 20: Pin Definition of Auxiliary UART Interface 54
Table 21: Pin Definition of ADC Interfaces 56
Table 22: Characteristics of ADC Interfaces 56
Table 23: Pin Definition of SPI 56
Table 24: Pin Definition of Indication Signals 57
Table 25: Working States of Network Connection Status/Activity Indication 57
Table 26: Behaviors of MAIN_RI 59
Table 27: Pin Definition of RF Antennas 60
Table 28: Operating Frequency of EG915U-CN 60
Table 29: Operating Frequency of EG915U-EU 61
Table 30: Operating Frequency of EG915U-LA 61
Table 31: Requirements for Antenna Design 65
Table 32: Absolute Maximum Ratings 68
Table 33: Power Supply Ratings 69
Table 34: EG915U-CN Current Consumption 69
Table 35: EG915U-EU Current Consumption 71
Table 36: EG915U-LA Current Consumption 74
Table 37: EG915U-CN RF Tx Power 77
Table 38: EG915U-EU RF Tx Power 77
Table 39: EG915U-LA RF Tx Power 77
Table 40: EG915U-CN Conducted RF Rx Sensitivity 78
Table 41: EG915U-EU Conducted RF Rx Sensitivity 78

Table 42: EG915U-LA Conducted RF Rx Sensitivity 79
Table 43: Electrostatics Discharge Characteristics (Temperature: 25–30 °C, Humidity: 40 ±5 %) 80
Table 44: Operating and Storage Temperatures 80
Table 45: Recommended Thermal Profile Parameters 87
Table 46: Carrier Tape Dimension Table (Unit: mm) 88
Table 47: Plastic Reel Dimension Table (Unit: mm) 89
Table 48: Related Documents 91
Table 49: Terms and Abbreviations 91

Figure Index

Figure 1: Functional Diagram 18
Figure 2: Pin Assignment (Top View) 19
Figure 3: Sleep Mode Application via UART 30
Figure 4: Sleep Mode Application with USB Remote Wakeup 31
Figure 5: Sleep Mode Application with MAIN_RI 32
Figure 6: Sleep Mode Application Without Suspend Function 33
Figure 7: Reference Design of Power Supply 36
Figure 8: Power Supply Limits during Burst Transmission 36
Figure 9: Power Supply 37
Figure 10: Reference Circuit for Driving PWRKEY 38
Figure 11: Reference Circuit with A Button 38
Figure 12: Turning On Module Automatically 39
Figure 13: Turn-on Timing 39
Figure 14: Turn-off Timing 40
Figure 15: Reference Circuit of RESET_N by Using Driving Circuit 42
Figure 16: Reference Circuit of RESET_N by Using A Button 42
Figure 17: Timing of Resetting the Module 43
Figure 18: Reference Design for Microphone Interface 45
Figure 19: Reference Design for Earpiece Interface 46
Figure 20: Reference Circuit of USB Application 47
Figure 21: Reference Circuit of USB_BOOT Interface 48
Figure 22: Reference Circuit of (U)SIM Interface with an 8-pin (U)SIM Card Connector 50
Figure 23: Reference Circuit of (U)SIM Interface with a 6-pin (U)SIM Card Connector 50
Figure 24: Timing of PCM Short Frame Mode 51
Figure 25: Reference Circuit of I2C and PCM Application with Audio Codec 52
Figure 26: Reference Circuit with Voltage-level Translator 54
Figure 27: Reference Circuit with Transistor 55
Figure 28: Reference Circuit of Network Status Indication 58
Figure 29: Reference Circuit of STATUS 58
Figure 30: Reference Circuit of RF Antennas 63
Figure 31: Microstrip Design on a 2-layer PCB 63
Figure 32: Coplanar Waveguide Design on a 2-layer PCB 64
Figure 33: Coplanar Waveguide Design on a 4-layer PCB (Layer 3 as Reference Ground) 64
Figure 34: Coplanar Waveguide Design on a 4-layer PCB (Layer 4 as Reference Ground) 64
Figure 35: Dimensions of Receptacle (Unit: mm) 66
Figure 36: Specifications of Mated Plugs 66
Figure 37: Space Factor of Mated Connector (Unit: mm) 67
Figure 38: Module Top and Side Dimensions (Unit: mm) 81
Figure 39: Module Bottom Dimensions 82
Figure 40: Recommended Footprint (Top View) 83
Figure 41: Top and Bottom Views 84

Figure 42: Recommended Reflow Soldering Thermal Profile 86
Figure 43: Carrier Tape Dimension Drawing..... 88
Figure 44: Plastic Reel Dimension Drawing 89
Figure 45: Mounting Direction..... 89
Figure 46: Packaging Process 90

1 Introduction

This document defines the EG915U series module and describes its air interfaces and hardware interfaces which relate to customers' applications.

With this document, you can quickly understand module interface specifications, electrical and mechanical details, as well as other related information of the module. The document, coupled with application notes and user guides, makes it easy to design and set up mobile applications with the module.

1.1. Special Mark

Table 1: Special Mark

Mark	Definition
*	Unless otherwise specified, when an asterisk (*) is used after a function, feature, interface, pin name, AT command, or argument, it indicates that the function, feature, interface, pin, AT command, or argument is under development and currently not supported; and the asterisk (*) after a model indicates that the sample of such model is currently unavailable.

2 Product Overview

EG915U series module is an LTE and GSM wireless communication module, which provides data connectivity on LTE-FDD, LTE-TDD, and GPRS networks. It also provides voice functionality, Bluetooth and Wi-Fi Scan [1] to meet your specific application demands. Related information and details are listed in the table below:

Table 2: Brief Introduction of the Module

Categories	
Packaging and Number of Pins	LGA; 126 pins
Dimensions	(23.6 ±0.2) mm × (19.9 ±0.2) mm × (2.4 ±0.2) mm
Weight	2.5 ±0.2 g
Wireless Network Functions	LTE/GSM/Bluetooth/Wi-Fi Scan [1]
Variants	EG915U-CN [2]; EG915U-EU; EG915U-LA

2.1. Frequency Bands and Functions

Table 3: Frequency Bands

Wireless Network Type	EG915U-CN	EG915U-EU	EG915U-LA
LTE-FDD	B1/B3/B5/B8	B1/B3/B5/B7/B8/B20/B28	B2/B3/B4/B5/B7/B8/B28/B66
LTE-TDD	B34/B38/B39/B40/B41	-	-
GSM	900/1800 MHz	850/900/1800/1900 MHz	850/900/1800/1900 MHz

[1] EG915U series supports Bluetooth and Wi-Fi Scan functions. Due to the shared antenna interface, the two functions cannot be used simultaneously. Bluetooth and Wi-Fi Scan functions are optional (both supported or not), and please contact Quectel Technical Support for details.
[2] Only EG915U-CN provides LTE-TDD, and please consult Quectel Technical Support for details.

Bluetooth and Wi-Fi Scan [1]	2.4 GHz	2.4 GHz	2.4 GHz

2.2. Key Features

The following table describes the detailed features of EG915U series module.

Table 4: Key Features

Features	Description
Power Supply	● Supply voltage: 3.3–4.3 V ● Typical supply voltage: 3.8 V
Transmitting Power	**EG915U-CN:** ● EGSM900: Class 4 (33 dBm ±2 dB) ● DCS1800: Class 1 (30 dBm ±2 dB) ● LTE-FDD: Class 3 (23 dBm ±2 dB) ● LTE-TDD: Class 3 (23 dBm ±2 dB) **EG915U-EU & EG915U-LA:** ● GSM850/EGSM900: Class 4 (33 dBm ±2 dB) ● DCS1800/PCS1900: Class 1 (30 dBm ±2 dB) ● LTE-FDD: Class 3 (23 dBm ±2 dB)
LTE Features	**EG915U-CN:** ● Supports up to Cat 1 FDD/TDD ● Supports 1.4/3/5/10/15/20 MHz RF bandwidth ● Supports uplink QPSK and 16QAM ● Supports downlink QPSK, 16QAM, and 64QAM ● Max. transmission data rates: FDD: 10 Mbps (DL)/5 Mbps (UL) TDD: 8.96 Mbps (DL)/3.1 Mbps (UL) **EG915U-EU & EG915U-LA:** ● Supports up to Cat 1 FDD ● Supports 1.4/3/5/10/15/20 MHz RF bandwidth ● Supports uplink QPSK and 16QAM ● Supports downlink QPSK, 16QAM, and 64QAM ● Max. transmission data rates: 10 Mbps (DL)/5 Mbps (UL)
GSM Features	**GPRS:** ● Supports GPRS multi-slot class 12 ● Coding scheme: CS-1/CS-2/CS-3/CS-4 ● Max. transmission data rates: 85.6 kbps (DL)/85.6 kbps (UL)
Internet Protocol Features	● Supports TCP/UDP/PPP/NTP/NITZ/FTP/HTTP/PING/CMUX/HTTPS/FTPS/SSL/FILE/MQTT/MMS/SMTP/SMTPS protocols

	● Supports PAP and CHAP protocols, which are usually used for PPP connection
SMS	● Text and PDU modes ● Point-to-point MO and MT ● SMS cell broadcast ● SMS storage: (U)SIM card and ME; ME by default
(U)SIM Interfaces	● Supports USIM/SIM card: 1.8/3.0 V ● Supports Dual SIM Single Standby
USB Interface	● Compliant with USB 2.0 specification (slave mode only), with maximum transmission rate up to 480 Mbps ● Used for AT command communication, data transmission, software debugging, firmware upgrade ● Supports USB serial drivers for Windows 7/8/8.1/10/11, Linux 2.6–5.18, and Android 4.x–12.x
UART Interfaces	**Main UART** ● Used for AT command communication and data transmission ● Baud rates: up to 921600 bps; 115200 bps by default ● Supports RTS and CTS hardware flow control **Debug UART** ● Used for log output ● Baud rate: 921600 bps ● Cannot be used as a general-purpose serial port **Auxiliary UART** The baud rate is the same as that of the Main UART
SPI	Supports one SPI (master mode only)
I2C Interface	Supports one I2C interface
PCM Interface	Supports one PCM interface (slave mode only)
Audio Features	● Supports one analog audio input and one analog audio output ● HR/FR/EFR/AMR/AMR-WB ● Supports echo cancellation and noise suppression
ADC Interfaces	Supports two ADC Interfaces
Indication Signals	● NET_STATUS indicates the module's network activity status ● STATUS indicates the module's operation status ● MAIN_RI indicates URC reporting
AT Commands	Compliant with *3GPP TS 27.007, 27.005* and Quectel enhanced AT commands
USB_BOOT Interface	● Supports one USB_BOOT interface ● Forces the module into emergency download mode
Antenna Interfaces	● Main antenna interface (ANT_MAIN) ● Bluetooth and Wi-Fi Scan antenna interface (ANT_BT/WIFI_SCAN)

	● 50 Ω impedance
Position Fixing	Supports Wi-Fi Scan
Temperature Range	● Operating temperature range: -35 to +75 °C [3] ● Extended temperature range: -40 to +85 °C [4] ● Storage temperature range: -40 to +90 °C
Firmware Upgrade	Via USB interface or DFOTA
RoHS	All hardware components are fully compliant with *EU RoHS Directive*

2.3. Functional Diagram

The following figure shows a block diagram of the module and illustrates the major functional parts.

- Power management
- Baseband
- Memory
- Radio frequency
- Peripheral interfaces

[3] Within the operating temperature range, the module meets 3GPP specifications.
[4] Within the extended temperature range, the module remains the ability to establish and maintain functions such as voice, SMS, data transmission, emergency call, etc., without any unrecoverable malfunction. Radio spectrum and radio network are not influenced, while one or more specifications, such as Pout, may exceed the specified tolerances of 3GPP. When the temperature returns to the operating temperature range, the module meets 3GPP specifications again.

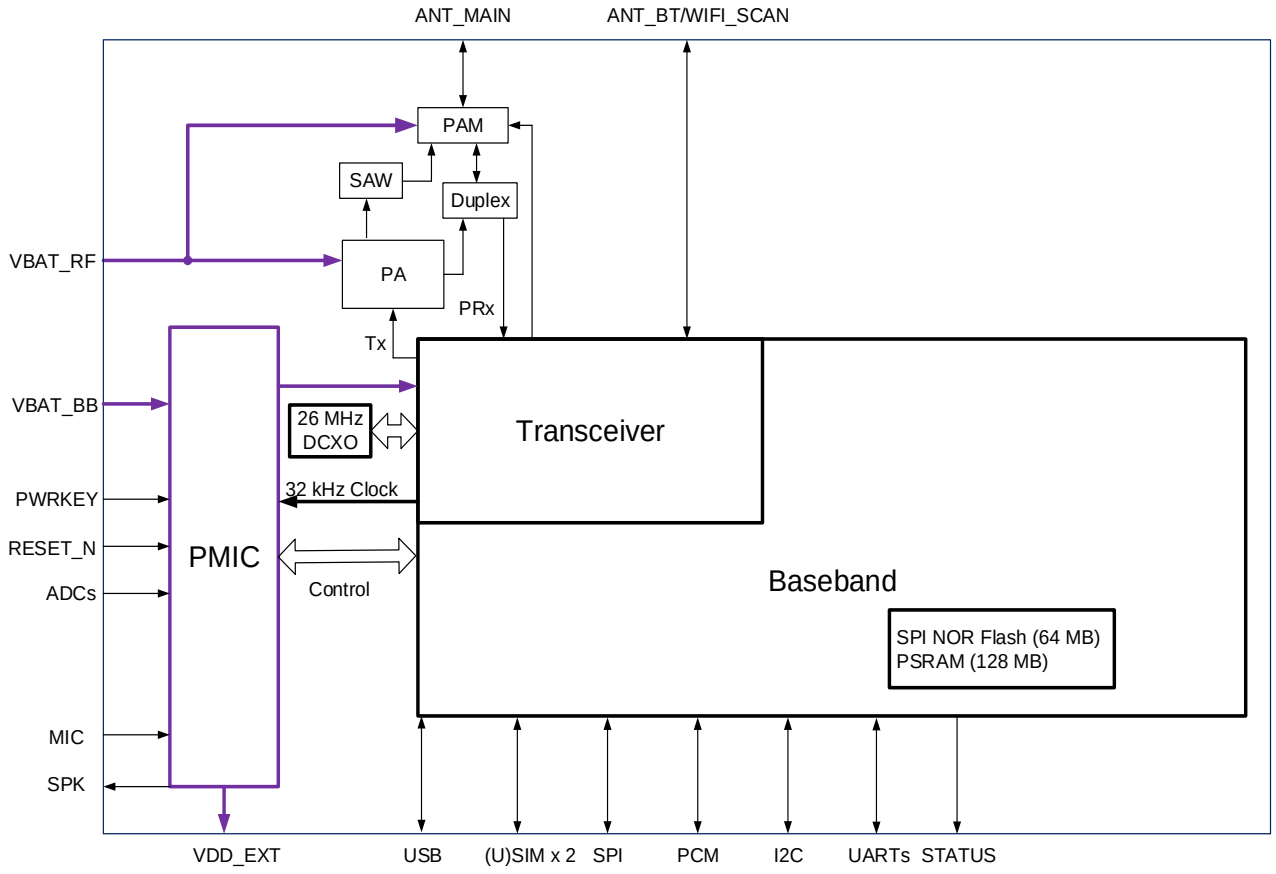

Figure 1: Functional Diagram

2.4. Pin Assignment

The following figure illustrates the pin assignment of the module.

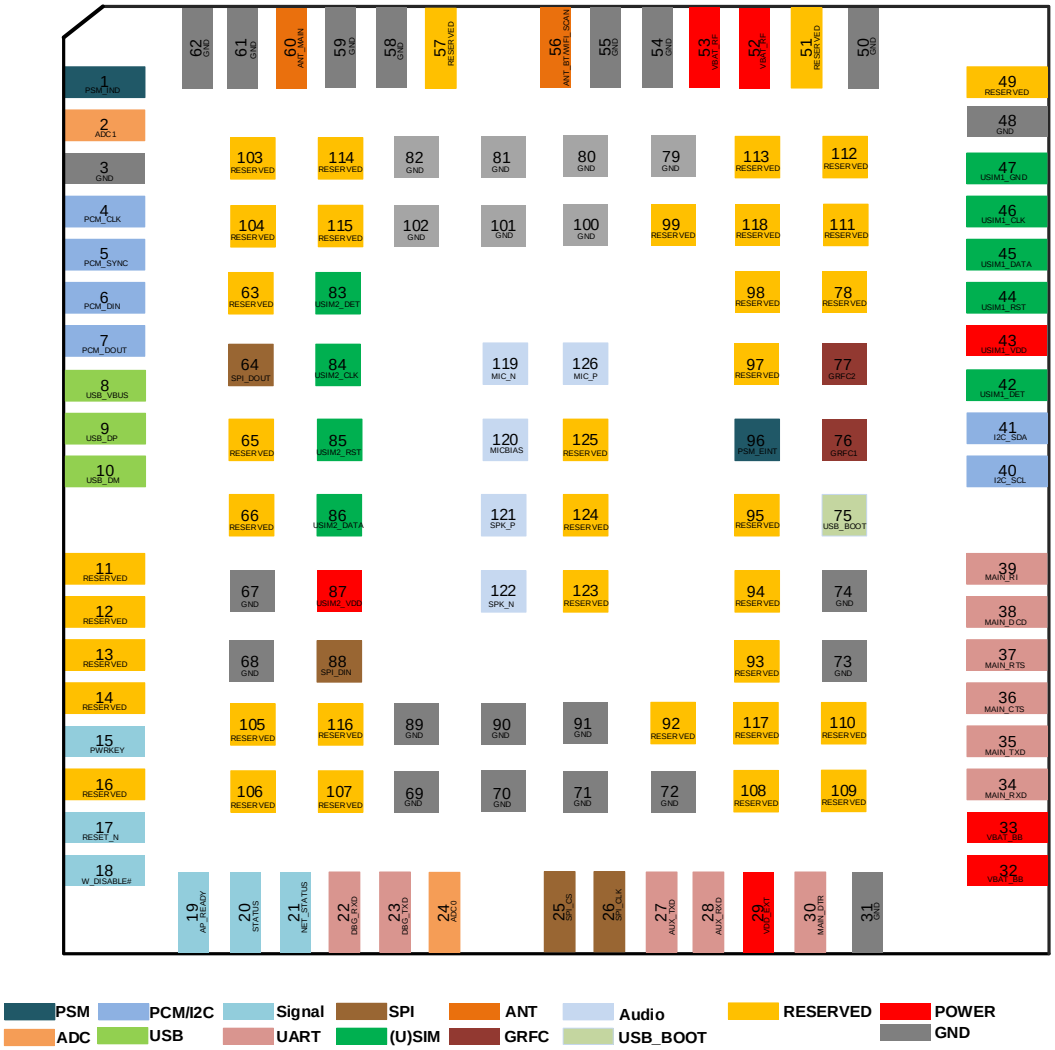

Figure 2: Pin Assignment (Top View)

NOTE

1. USB_BOOT cannot be pulled up before the module's startup, if emergency download mode is not required.
2. Keep unused and RESERVED pins unconnected, and connect all GND pins to ground.
3. The module supports Dual SIM Single Standby. For details, please contact Quectel Technical Support.
4. When using pins 18, 19, 30, 38, and 39, please note that these pins will have a period of variable

level state (not controllable by software) after the module is powered on: at high level (3.0 V) for 2 s and then at low level (0 V) for 1.2 s before they can be configured as 1.8 V input or output. Please evaluate whether the unstable level output state on power-up meets your application design requirements based on the specific usage scenario and circuit design.

2.5. Pin Description

The following tables show the pin definition of the module.

Table 5: I/O Parameters Definition

Type	Description
AI	Analog Input
AIO	Analog Input/Output
AO	Analog Output
DI	Digital Input
DIO	Digital Input/Output
DO	Digital Output
OD	Open Drain
PI	Power Input
PO	Power Output

Table 6: Pin Description

Power Supply					
Pin Name	**Pin No.**	**I/O**	**Description**	**DC Characteristics**	**Comment**
VBAT_BB	32, 33	PI	Power supply for the module's baseband part	Vmax = 4.3 V Vmin = 3.3 V Vnom = 3.8 V	It must be provided with sufficient current of 1 A at least.
VBAT_RF	52, 53	PI	Power supply for the module's RF part		It must be provided with

					sufficient current up to 2.5 A.
VDD_EXT	29	PO	Provides 1.8 V for external circuit	Vnom = 1.8 V $I_O$max = 50 mA	Used with a 2.2 μF capacitor. A test point is recommended to be reserved.
Power On/Off					
Pin Name	**Pin No.**	**I/O**	**Description**	**DC Characteristics**	**Comment**
PWRKEY	15	DI	Turns on/off the module	V_{IL}max = 0.5 V	VBAT power domain. Active low. A test point is recommended to be reserved.
RESET_N	17	DI	Resets the module		VBAT power domain. Active low. A test point is recommended to be reserved.
Indication Interfaces					
Pin Name	**Pin No.**	**I/O**	**Description**	**DC Characteristics**	**Comment**
STATUS	20	DO	Indicates the module's operation status	V_{OH}min = 1.35 V V_{OL}max = 0.45 V	1.8 V power domain. If unused, keep them open.
NET_STATUS	21	DO	Indicates the module's network activity status		
USB Interface					
Pin Name	**Pin No.**	**I/O**	**Description**	**DC Characteristics**	**Comment**
USB_VBUS	8	AI	USB connection detect	Input voltage range: 3.5 V to 5.25 V	A test point must be reserved.
USB_DP	9	AIO	USB differential data (+)		USB 2.0 compliant. Requires differential impedance of 90 Ω. Test points must be reserved.
USB_DM	10	AIO	USB differential data (-)		

(U)SIM Interfaces					
Pin Name	**Pin No.**	**I/O**	**Description**	**DC Characteristics**	**Comment**
USIM1_VDD	43	PO	(U)SIM1 card power supply	$I_O$max = 50 mA **1.8 V (U)SIM:** Vmax = 1.9 V Vmin = 1.7 V **3.0 V (U)SIM:** Vmax = 3.05 V Vmin = 2.7 V	Either 1.8 V or 3.0 V (U)SIM card is supported and can be identified automatically by the module.
USIM1_DATA	45	DIO	(U)SIM1 card data	**1.8 V (U)SIM:** V_{IL}max = 0.6 V V_{IH}min = 1.26 V V_{OL}max = 0.45 V V_{OH}min = 1.35 V **3.0 V (U)SIM:** V_{IL}max = 1.0 V V_{IH}min = 1.95 V V_{OL}max = 0.45 V V_{OH}min = 2.55 V	
USIM1_CLK	46	DO	(U)SIM1 card clock	**1.8 V (U)SIM:** V_{OL}max = 0.45 V V_{OH}min = 1.35 V **3.0 V (U)SIM:** V_{OL}max = 0.45 V V_{OH}min = 2.55 V	
USIM1_RST	44	DO	(U)SIM1 card reset	**1.8 V (U)SIM:** V_{OL}max = 0.45 V V_{OH}min = 1.35 V **3.0 V (U)SIM:** V_{OL}max = 0.45 V V_{OH}min = 2.55 V	
USIM1_DET	42	DI	(U)SIM1 card hot-plug detect	V_{IL}min = -0.3 V V_{IL}max = 0.6 V V_{IH}min = 1.26 V V_{IH}max = 2.0 V	1.8 V power domain. If unused, keep it open.
USIM1_GND	47	-	Ground	-	Specified ground for (U)SIM1 card.

USIM2_VDD	87	PO	(U)SIM2 card power supply	Iomax = 50 mA **1.8 V (U)SIM:** Vmax = 1.9 V Vmin = 1.7 V **3.0 V (U)SIM:** Vmax = 3.05 V Vmin = 2.7 V	Either 1.8 V or 3.0 V (U)SIM card is supported and can be identified automatically by the module.
USIM2_DATA	86	DIO	(U)SIM2 card data	**1.8 V (U)SIM:** V_{IL}max = 0.6 V V_{IH}min = 1.26 V V_{OL}max = 0.45 V V_{OH}min = 1.35 V **3.0 V (U)SIM:** V_{IL}max = 1.0 V V_{IH}min = 1.95 V V_{OL}max = 0.45 V V_{OH}min = 2.55 V	
USIM2_CLK	84	DO	(U)SIM2 card clock	**1.8 V (U)SIM:** V_{OL}max = 0.45 V V_{OH}min = 1.35 V **3.0 V (U)SIM:** V_{OL}max = 0.45 V V_{OH}min = 2.55 V	
USIM2_RST	85	DO	(U)SIM2 card reset	**1.8 V (U)SIM:** V_{OL}max = 0.45 V V_{OH}min = 1.35 V **3.0 V (U)SIM:** V_{OL}max = 0.45 V V_{OH}min = 2.55 V	
USIM2_DET	83	DI	(U)SIM2 card hot-plug detect	V_{IL}min = -0.3 V V_{IL}max = 0.6 V V_{IH}min = 1.26 V V_{IH}max = 2.0 V	1.8 V power domain. A test point must be reserved for debugging.
Main UART Interface					
Pin Name	**Pin No.**	**I/O**	**Description**	**DC Characteristics**	**Comment**
MAIN_CTS	36	DO	DTE clear to send signal to DCE	V_{OL}max = 0.45 V V_{OH}min = 1.35 V	Connect to DTE's CTS. 1.8 V power

					domain. If unused, keep it open.
MAIN_RTS	37	DI	DTE request to send signal to DCE	V_{IL}min = -0.3 V V_{IL}max = 0.6 V V_{IH}min = 1.26 V V_{IH}max = 2.0 V	Connect to DTE's RTS. 1.8 V power domain. If unused, keep it open.
MAIN_RXD	34	DI	Main UART receive	V_{IL}min = -0.3 V V_{IL}max = 0.6 V V_{IH}min = 1.26 V V_{IH}max = 2.0 V	1.8 V power domain. If unused, keep them open.
MAIN_DCD	38	DO	Main UART data carrier detect	V_{OL}max = 0.45 V V_{OH}min = 1.35 V	
MAIN_TXD	35	DO	Main UART transmit	V_{OL}max = 0.45 V V_{OH}min = 1.35 V	
MAIN_RI	39	DO	Main UART ring indication	V_{OL}max = 0.45 V V_{OH}min = 1.35 V	
MAIN_DTR	30	DI	Main UART data terminal ready	V_{IL}min = -0.3 V V_{IL}max = 0.6 V V_{IH}min = 1.26 V V_{IH}max = 2.0 V	
Auxiliary UART Interface					
Pin Name	**Pin No.**	**I/O**	**Description**	**DC Characteristics**	**Comment**
AUX_TXD	27	DO	Auxiliary UART transmit	V_{OL}max = 0.45 V V_{OH}min = 1.35 V	1.8 V power domain. If unused, keep them open.
AUX_RXD	28	DI	Auxiliary UART receive	V_{IL}min = -0.3 V V_{IL}max = 0.6 V V_{IH}min = 1.26 V V_{IH}max = 2.0 V	
Debug UART Interface					
Pin Name	**Pin No.**	**I/O**	**Description**	**DC Characteristics**	**Comment**
DBG_RXD	22	DI	Debug UART receive	V_{IL}min = -0.3 V V_{IL}max = 0.6 V V_{IH}min = 1.26 V V_{IH}max = 2.0 V	1.8 V power domain. Test points must be reserved for debugging.
DBG_TXD	23	DO	Debug UART transmit	V_{OL}max = 0.45 V V_{OH}min = 1.35 V	
PCM and I2C Interfaces					

Pin Name	Pin No.	I/O	Description	DC Characteristics	Comment
I2C_SCL	40	OD	I2C serial clock		External pull-up resistor is required. 1.8 V power domain only. If unused, keep them open.
I2C_SDA	41	OD	I2C serial data		
PCM_SYNC	5	DI	PCM data frame sync	V_{IL}min = -0.3 V V_{IL}max = 0.6 V V_{IH}min = 1.26 V V_{IH}max = 2.0 V	1.8 V power domain. If unused, keep them open. Support slave mode only.
PCM_CLK	4	DI	PCM clock	V_{IL}min = -0.3 V V_{IL}max = 0.6 V V_{IH}min = 1.26 V V_{IH}max = 2.0 V	
PCM_DIN	6	DI	PCM data input	V_{IL}min = -0.3 V V_{IL}max = 0.6 V V_{IH}min = 1.26 V V_{IH}max = 2.0 V	
PCM_DOUT	7	DO	PCM data output	V_{OL}max = 0.45 V V_{OH}min = 1.35 V	
RF Antenna Interfaces					
Pin Name	**Pin No.**	**I/O**	**Description**	**DC Characteristics**	**Comment**
ANT_MAIN	60	AIO	Main antenna interface		50 Ω impedance.
ANT_BT/ WIFI_SCAN	56	AIO	The shared interface for Bluetooth and Wi-Fi Scan		50 Ω impedance. If unused, keep it open.
GRFC Antenna Tuner Control Interface					
Pin Name	**Pin No.**	**I/O**	**Description**	**DC Characteristics**	**Comment**
GRFC1	76	DO	Generic RF Controller	V_{OL}max = 0.45 V V_{OH}min = 1.35 V	1.8 V power domain. If unused, keep them open.
GRFC2	77	DO			
SPI					
Pin Name	**Pin No.**	**I/O**	**Description**	**DC Characteristics**	**Comment**
SPI_CLK	26	DO	SPI clock	V_{OL}max = 0.45 V V_{OH}min = 1.35 V	1.8 V power domain.

SPI_CS	25	DO	SPI chip select	V_{OL}max = 0.45 V V_{OH}min = 1.35 V	Supports master mode only. If unused, keep them open.
SPI_DIN	88	DI	SPI master mode input	V_{IL}min = -0.3 V V_{IL}max = 0.6 V V_{IH}min = 1.26 V V_{IH}max = 2.0 V	
SPI_DOUT	64	DO	SPI master mode output	V_{OL}max = 0.45 V V_{OH}min = 1.35 V	
ADC Interfaces					
Pin Name	**Pin No.**	**I/O**	**Description**	**DC Characteristics**	**Comment**
ADC0	24	AI	General-purpose ADC interfaces	Input voltage range: 0 V to VBAT	It is recommended to reserve a voltage divider circuit. If unused, keep them open.
ADC1	2	AI			
Analog Audio Interfaces					
Pin Name	**Pin No.**	**I/O**	**Description**	**DC Characteristics**	**Comment**
MIC_N	119	AI	Microphone analog input (-)		If unused, keep them open.
MICBIAS	120	PO	Bias voltage output for microphone	Vo = 2.2–3.0 V Vnom = 2.2 V	
SPK_P	121	AO	Analog audio differential output (+)		
SPK_N	122	AO	Analog audio differential output (-)		
MIC_P	126	AI	Microphone analog input (+)		
USB_BOOT					
Pin Name	**Pin No.**	**I/O**	**Description**	**DC Characteristics**	**Comment**
USB_BOOT	75	DI	Forces the module into emergency download mode	V_{IL}min = -0.3 V V_{IL}max = 0.6 V V_{IH}min = 1.26 V V_{IH}max = 2.0 V	Active high. A circuit that enables the module to enter the download mode must be reserved. A test point is

					recommended to be reserved.
PSM Interface					
Pin Name	**Pin No.**	**I/O**	**Description**	**DC Characteristics**	**Comment**
PSM_IND*	1	DO	Indicates the module's power saving mode.	1.8 V power domain	If unused, keep them open.
PSM_EINT	96	DI	External interrupt pin. Wakes up the module from PSM.	3 V power domain	
Other Interfaces					
Pin Name	**Pin No.**	**I/O**	**Description**	**DC Characteristics**	**Comment**
W_DISABLE#	18	DI	Airplane mode control	V_{IL}min = -0.3 V V_{IL}max = 0.6 V V_{IH}min = 1.26 V V_{IH}max = 2.0 V	1.8 V power domain. Pulled up by default. When it is in low voltage level, the module can enter the airplane mode. If unused, keep it open.
AP_READY	19	DI	Application processor ready	V_{IL}min = -0.3 V V_{IL}max = 0.6 V V_{IH}min = 1.26 V V_{IH}max = 2.0 V	1.8 V power domain. If unused, keep it open.
GND					
Pin Name	**Pin No.**				
GND	3, 31, 48, 50, 54, 55, 58, 59, 61, 62, 67–74, 79–82, 89–91, 100–102				
RESERVED					
Pin Name	**Pin No.**				
RESERVED	11–14, 16, 49, 51, 57, 63, 65, 66, 78, 92–95, 97–99, 103–118, 123–125				

NOTE

When using pins 18, 19, 30, 38, and 39, please note that these pins will have a period of variable level state (not controllable by software) after the module is powered on: at high level (3.0 V) for 2 s and then at low level (0 V) for 1.2 s before they can be configured as 1.8 V input or output. Please evaluate whether the unstable level output state on power-up meets your application design requirements based on the specific usage scenario and circuit design.

2.6. EVB Kit

To help you develop applications with the module, Quectel supplies an evaluation board (UMTS&LTE EVB) with accessories to control or test the module. For more details, see ***document [1]***.

3 Operating Characteristics

3.1. Operating Modes

The following table briefly outlines the operating modes referred in the following chapters.

Table 7: Overview of Operating Modes

Mode	Details	
Full Functionality Mode	Idle	Software is active. The module remains registered on the network and is ready to send and receive data.
	Voice/Data	Network connection is ongoing. In this mode, the power consumption is decided by network setting and data transfer rate.
Minimum Functionality Mode	**AT+CFUN=0** can set the module to a minimum functionality mode without removing the power supply. In this case, both RF function and (U)SIM card will be invalid.	
Airplane Mode	**AT+CFUN=4** or W_DISABLE# pin can set the module to airplane mode. In this case, RF function will be invalid.	
Sleep Mode	In this mode, current consumption of the module is reduced to a low level. The module remains the ability to receive paging message, SMS, voice calls and TCP/UDP data from network normally.	
PSM	In this mode, current consumption of the module is reduced to a minimized level. AT command cannot be sent to the module, but the module remains the ability to receive paging message from station and can be woken up to work.	
Power Down Mode	PMU shuts down the power supply. Software is not active. However, operating voltage connected to VBAT pins remains applied.	

NOTE

For more details about AT commands, see ***document [2]***.

3.2. Sleep Mode

The module is able to reduce its current consumption to a low value in the sleep mode. The following chapters describe power saving procedures of the module.

3.2.1. UART Application Scenario

If the host communicates with module via UART interface, the following preconditions should be met to make the module enter sleep mode.

- Execute **AT+QSCLK=1** to enable sleep mode.
- Drive MAIN_DTR to high level.

The following figure shows the connection between the module and the host.

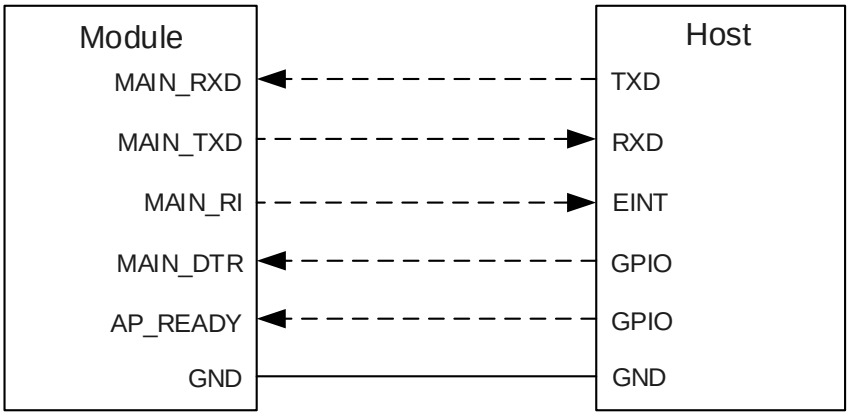

Figure 3: Sleep Mode Application via UART

- Driving MAIN_DTR low will wake up the module.
- When the module has a URC to report, the URC will trigger the behavior of MAIN_RI pin. See ***Chapter 4.9.3*** for details about MAIN_RI behaviors.

NOTE

When using AP_READY, MAIN_DTR, and MAIN_RI (pins 19, 30, and 39), please note that these pins will have a period of variable level state (not controllable by software) after the module is powered on: at high level (3.0 V) for 2 s and then at low level (0 V) for 1.2 s before they can be configured as 1.8 V input or output. Please evaluate whether the unstable level output state on power-up meets your application design requirements based on the specific usage scenario and circuit design.

3.2.2. USB Application Scenario

3.2.2.1. USB Application with USB Remote Wakeup Function

If the host supports USB suspend/resume and remote wakeup function, three preconditions must be met to make the module enter the sleep mode:

- Execute **AT+QSCLK=1** to enable sleep mode.
- Ensure the MAIN_DTR is held at a high level or keep it open.
- Ensure the host's USB bus, which is connected with the module's USB interface, enters suspend state.

The following figure illustrates the connection between the module and the host.

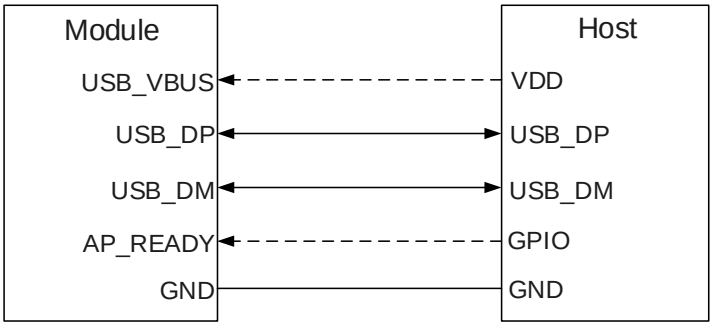

Figure 4: Sleep Mode Application with USB Remote Wakeup

- You can wake up the module by sending data to it through USB.
- When the module has a URC to report, the module will send remote wake-up signals to USB bus to wake up the host.

NOTE

USB suspend is supported on Linux system but not on Windows system.

3.2.2.2. USB Application with USB Suspend/Resume and MAIN_RI Function

If the host supports USB suspend/resume, but does not support remote wake-up function, the MAIN_RI signal is needed to wake up the host.

In this case, three preconditions can make the module enter the sleep mode.

- Execute **AT+QSCLK=1** to enable sleep mode.
- Ensure the MAIN_DTR is held at high level or keep it open.
- Ensure the host's USB bus, which is connected with the module's USB interface, enters suspend state.

The following figure illustrates the connection between the module and the host.

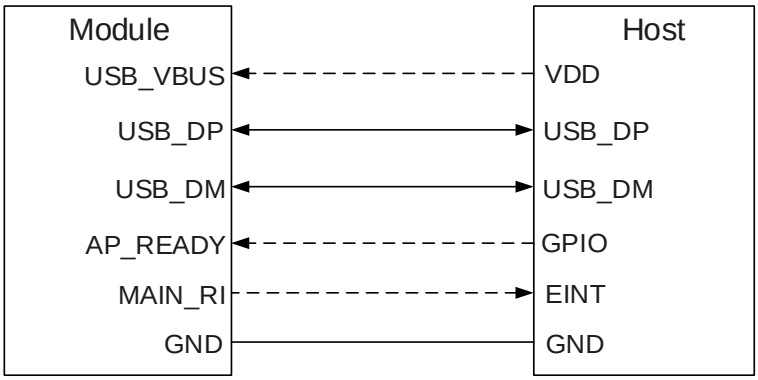

Figure 5: Sleep Mode Application with MAIN_RI

- You can wake up the module by sending data to it through USB.
- When the module has a URC to report, the URC will trigger the behaviors of MAIN_RI pin. See ***Chapter 4.9.3*** for details about MAIN_RI behaviors.

NOTE

USB suspend is supported on Linux system but not on Windows system.

3.2.2.3. USB Application without USB Suspend Function

If the host does not support USB suspend function, disconnect USB_VBUS with an externally-controlled circuit to make the module enter sleep mode.

- Execute **AT+QSCLK=1** to enable sleep mode.
- Ensure the MAIN_DTR is held at a high level or keep it open.
- Disconnect the USB_VBUS.

The following figure illustrates the connection between the module and the host.

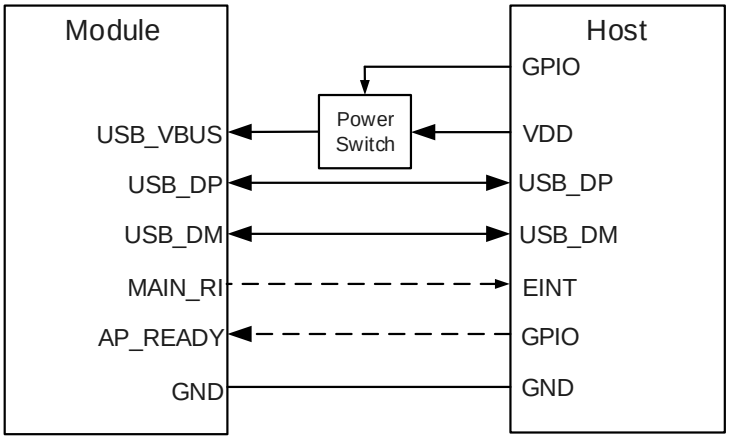

Figure 6: Sleep Mode Application Without Suspend Function

You can wake up the module by turning on the power switch to supply power to USB_VBUS.

NOTE

1. Please pay attention to the level match shown in dotted line between the module and the host.
2. When using AP_READY, MAIN_DTR, and MAIN_RI (pins 19, 30, and 39), please note that these pins will have a period of variable level state (not controllable by software) after the module is powered on: at high level (3.0 V) for 2 s and then at low level (0 V) for 1.2 s before they can be configured as 1.8 V input or output. Please evaluate whether the unstable level output state on power-up meets your application design requirements based on the specific usage scenario and circuit design.

3.3. Airplane Mode

When the module enters airplane mode, the RF function will be disabled and all AT commands related to it will be inaccessible. This mode can be set via the following ways.

3.3.1. Hardware

The W_DISABLE# pin is pulled up by default. Its control function for airplane mode, which is disabled by default, can be enabled through **AT+QCFG="airplanecontrol",1**. When such a control function is enabled, you can drive it to low level to make the module enter airplane mode.

NOTE

When using W_DISABLE# (pin 18), please note that it will have a period of variable level state (not controllable by software) after the module is powered on: at high level (3.0 V) for 2 s and then at low level (0 V) for 1.2 s before it can be configured as 1.8 V input. Please evaluate whether the unstable level output state on power-up meets your application design requirements based on the specific usage scenario and circuit design.

3.3.2. Software

AT+CFUN=<fun> provides the choice of functionality level through setting **<fun>** to 0, 1 or 4.

- **AT+CFUN=0:** Minimum functionality. Both RF function and (U)SIM functions are disabled.
- **AT+CFUN=1:** Full functionality (by default).
- **AT+CFUN=4:** RF function is disabled (airplane mode).

NOTE

For more details about AT command, see ***document [2]***.

3.4. PSM

The module supports power saving mode (PSM). It enters the PSM through executing the following AT commands sequentially when working normally.

- **AT+CFUN=4:** Enter airplane mode.
- **AT+QSCLK=3:** Enable PSM. (See ***document [3]*** for details on **AT+QSCLK**.)
- **AT+CFUN=1:** Exit airplane mode.

Pulling up the PSM_EINT pin externally or setting the timer by software will enable the module to exit PSM.

Table 8: Pin Definition of PSM_IND and PSM_EINT

Pin Name	Pin No.	I/O	Description
PSM_IND*	1	DO	Indicates the module's power saving mode.
PSM_EINT	96	DI	External interrupt pin. Wakes up the module from PSM.

3.5. Power Supply

3.5.1. Power Supply Pins

The module provides 4 VBAT pins for connection with an external power supply.

- Two VBAT_RF pins for RF part.
- Two VBAT_BB pins for BB part.

Table 9: Pin Definition of Power Supply

Pin Name	Pin No.	I/O	Description	Min.	Typ.	Max.	Unit
VBAT_BB	32, 33	PI	Power supply for the module's baseband part	3.3	3.8	4.3	V
VBAT_RF	52, 53	PI	Power supply for the module's RF part	3.3	3.8	4.3	V
GND	3, 31, 48, 50, 54, 55, 58, 59, 61, 62, 67–74, 79–82, 89–91, 100–102						

3.5.2. Reference Design for Power Supply

The power design for the module is very important, as the performance of the module largely depends on the power source. The power supply of the module should be able to provide sufficient current of 3.0 A when the GSM or both GSM and LTE are available and provide sufficient current of 2.0 A when only LTE is available. If the voltage drop between input and output is not too high, it is suggested that an LDO should be used to supply power to the module. If there is a big voltage difference between the input source and the desired output (VBAT), a buck converter is recommended.

The following figure illustrates a reference design for +5 V input power source. The typical output of the power supply is about 3.8 V and the maximum load current is 3.0 A.

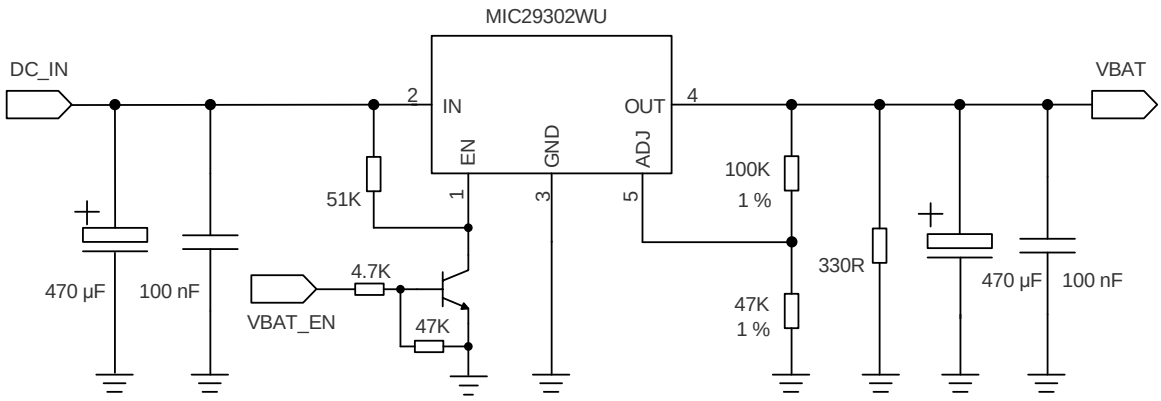

Figure 7: Reference Design of Power Supply

3.5.3. Voltage Stability Requirements

The power supply range of the module is from 3.3 V to 4.3 V. Please make sure the input voltage never drops below 3.3 V.

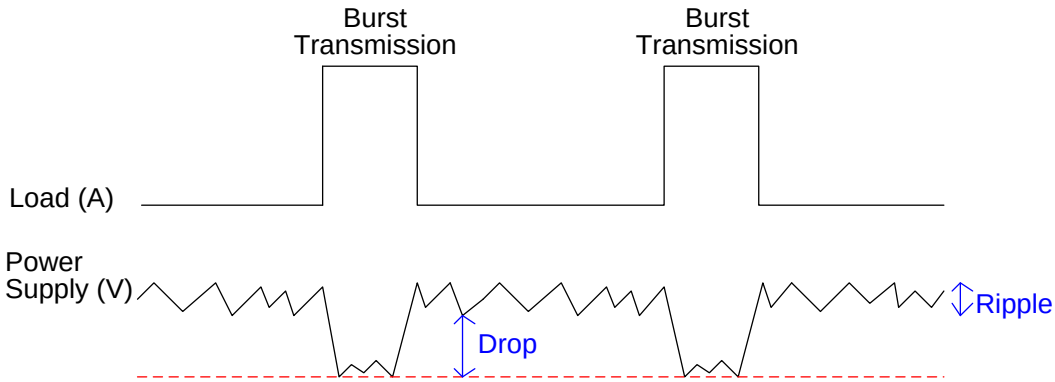

Figure 8: Power Supply Limits during Burst Transmission

To decrease voltage drop, a filter capacitor of about 100 µF with low ESR (ESR ≤ 0.7 Ω) should be used, and a multi-layer ceramic chip (MLCC) capacitor array should also be reserved due to its ultra-low ESR. It is recommended to use three ceramic capacitors (100 nF, 33 pF, 10 pF) for composing the MLCC array, and place these capacitors close to the VBAT_BB and VBAT_RF pins. The main power supply from an external application has to be a single voltage source and can be expanded to two sub paths with star structure. The width of VBAT_BB trace should be not less than 2 mm; and the width of VBAT_RF trace should be not less than 2.5 mm. In principle, the longer the VBAT trace is, the wider it will be.

In addition, in order to ensure the stability of power source, it is suggested that a TVS of which reverse stand-off voltage is 4.7 V and peak pulse power is up to 2550 W should be used. The reference circuit is shown as below.

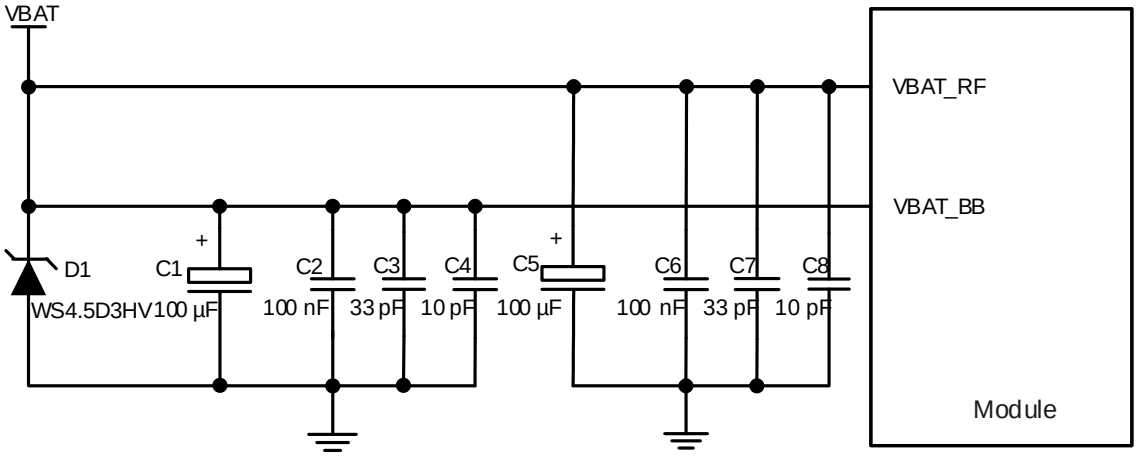

Figure 9: Power Supply

3.6. Turn On

3.6.1. Turn On with PWPKEY

Table 10: Pin Definition of PWRKEY

Pin Name	Pin No.	I/O	Description	Comment
PWRKEY	15	DI	Turns on/off the module	VBAT power domain. Active low. A test point is recommended to be reserved.

When the module is in power down mode, you can turn it on to normal mode by driving the PWRKEY pin low for at least 2 s. It is recommended to use an open drain/collector driver to control the PWRKEY. A simple reference circuit is illustrated in the following figure.

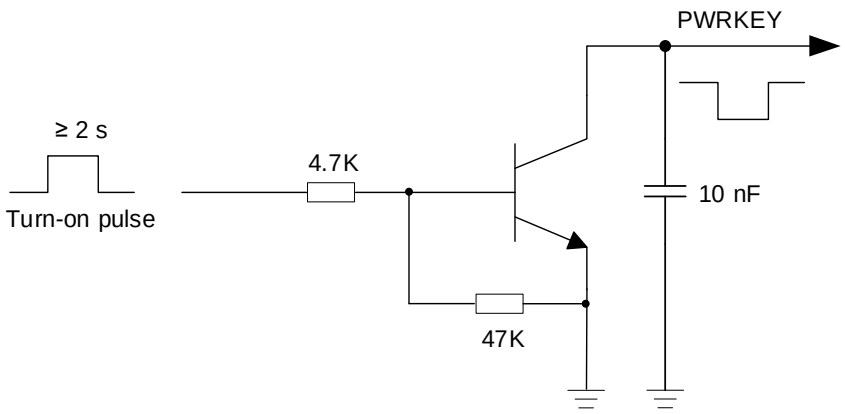

Figure 10: Reference Circuit for Driving PWRKEY

Another way to control the PWRKEY is using a button directly. When you are pressing the key, electrostatic strike may be generated from finger. Therefore, you must place a TVS nearby the button for ESD protection. A reference circuit is shown in the following figure.

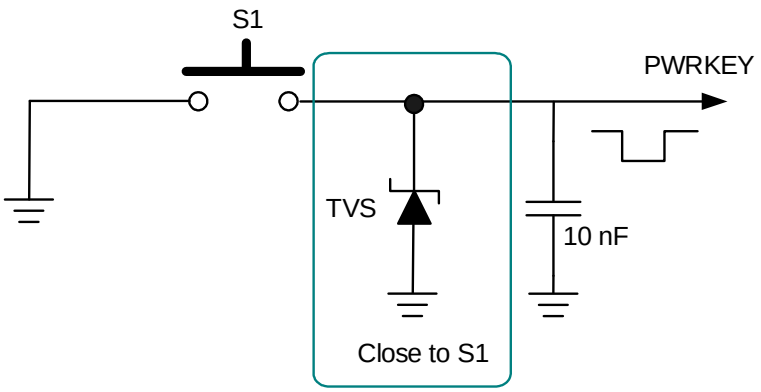

Figure 11: Reference Circuit with A Button

If the module needs to turn on automatically, PWRKEY can be driven low directly to ground with a recommended 1 kΩ resistor. However, ensure that the voltage of VBAT_BB and VBAT_RF pins are below 0.5 V before power-up.

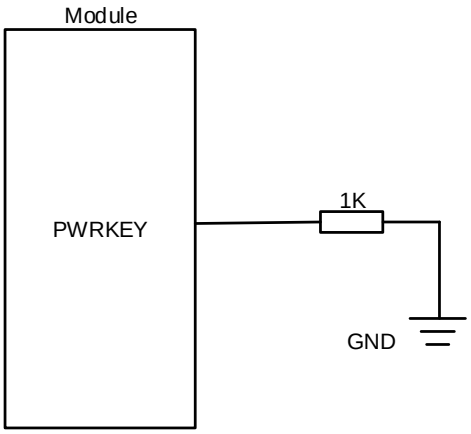

Figure 12: Turning On Module Automatically

The turn-on timing is illustrated in the following figure.

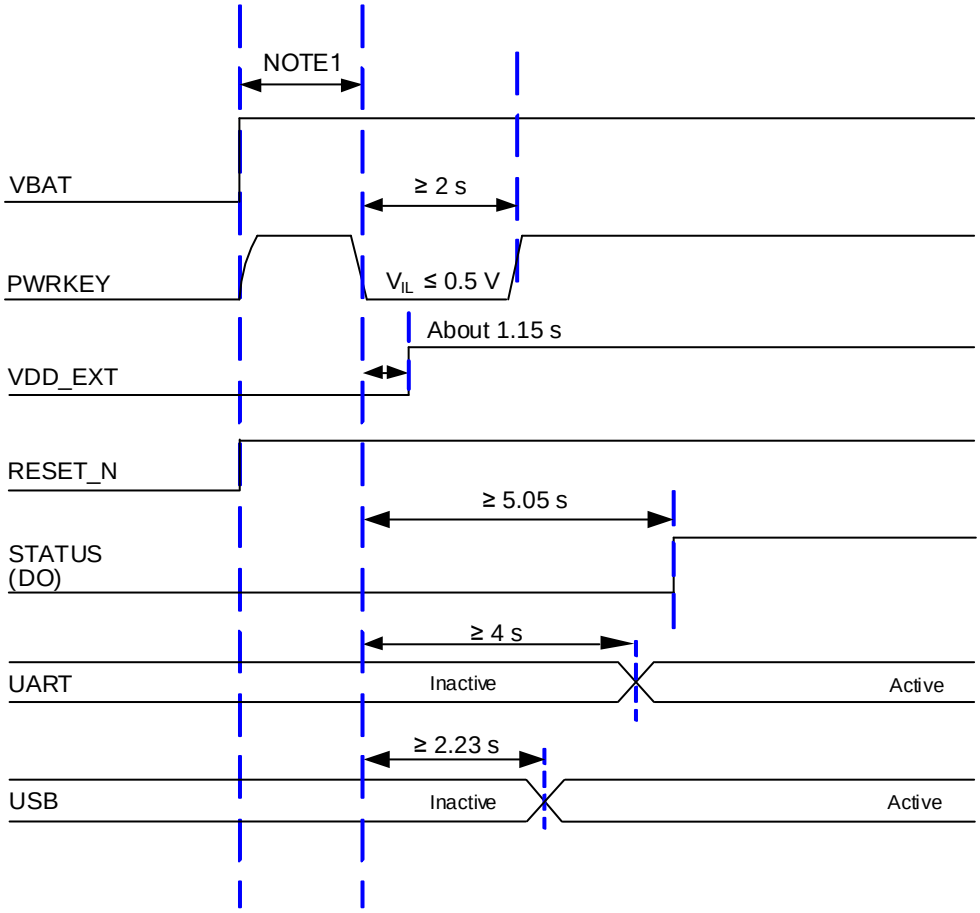

Figure 13: Turn-on Timing

NOTE

1. Make sure that the VBAT is stable before pulling down PWRKEY pin. It is recommended that the time difference between powering up VBAT and pulling down PWRKEY pin is not less than 30 ms.
2. When the PWRKEY pin has been kept pulled down directly to GND, the module will not boot automatically after being turned off with the AT command. In this case, it is necessary to forcibly disconnect the VBAT power supply and power on the module again. Therefore, we recommend to use a control circuit to drive the PWEKEY high/low to turn on/off the module instead of keeping the PWRKEY connected to GND.

3.7. Turn Off

The following methods can be used to turn off the module:

- Use the PWRKEY pin.
- Execute **AT+QPOWD**.

3.7.1. Turn Off with PWPKEY

Drive the PWRKEY pin low for at least 3 s and then release PWRKEY. After this, the module executes power-down procedure. The turn-off timing is illustrated in the following figure.

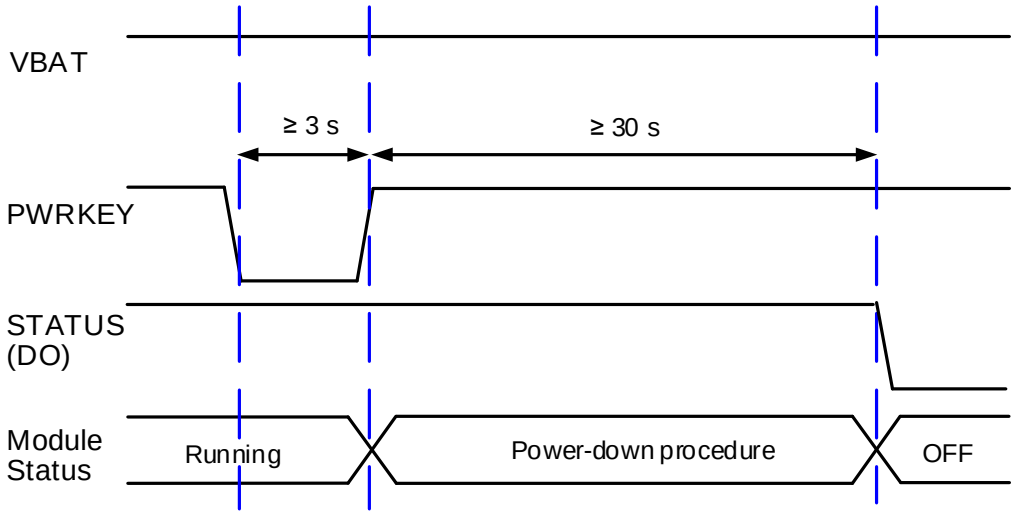

Figure 14: Turn-off Timing

3.7.2. Turn Off with AT Command

It is also a safe way to use **AT+QPOWD** to turn off the module, which is similar to turning off the module via the PWRKEY pin.

Please see ***document [2]*** for details about **AT+QPOWD** command.

NOTE

1. To avoid corrupting the data in the internal flash, do not switch off the power supply when the module works normally. Only after shutting down the module with PWRKEY or AT command can you cut off the power supply.
2. When being turned off, the module will log out of the network. The time for logging out relates to its network status. Thus, please pay attention to the shutdown time in your design because the actual shutdown time varies according to the network status.

3.8. Reset

The RESET_N pin can be used to reset the module. The module can be reset by driving the RESET_N pin low for at least 100 ms and then releasing it. The RESET_N signal is sensitive to interference, so it is recommended to route the trace as short as possible and surround it with ground.

Table 11: Pin Definition of RESET_N

Pin Name	Pin No.	I/O	Description	Comment
RESET_N	17	DI	Resets the module	VBAT power domain. A test point is recommended to be reserved.

The recommended circuit is similar to the PWRKEY control circuit. An open drain/collector driver or button can be used to control the RESET_N.

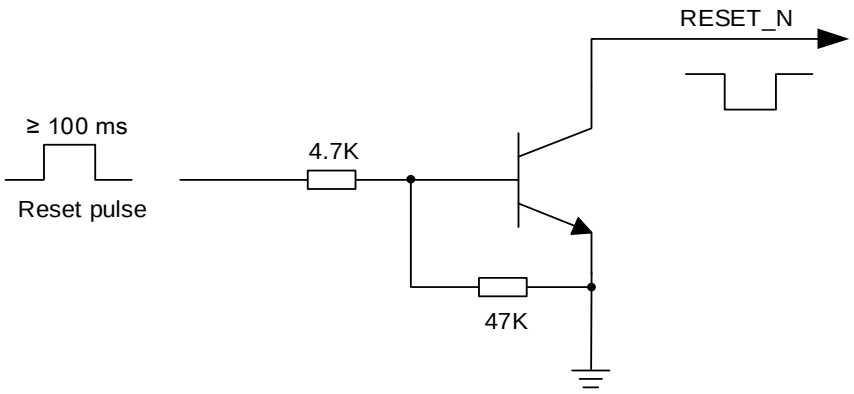

Figure 15: Reference Circuit of RESET_N by Using Driving Circuit

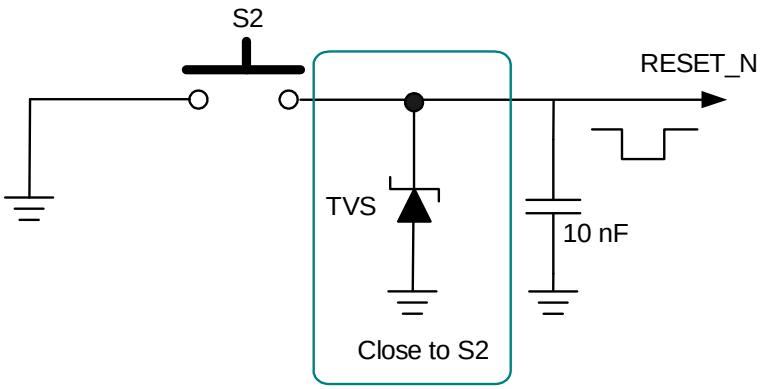

Figure 16: Reference Circuit of RESET_N by Using A Button

The reset scenario is illustrated in the following figure.

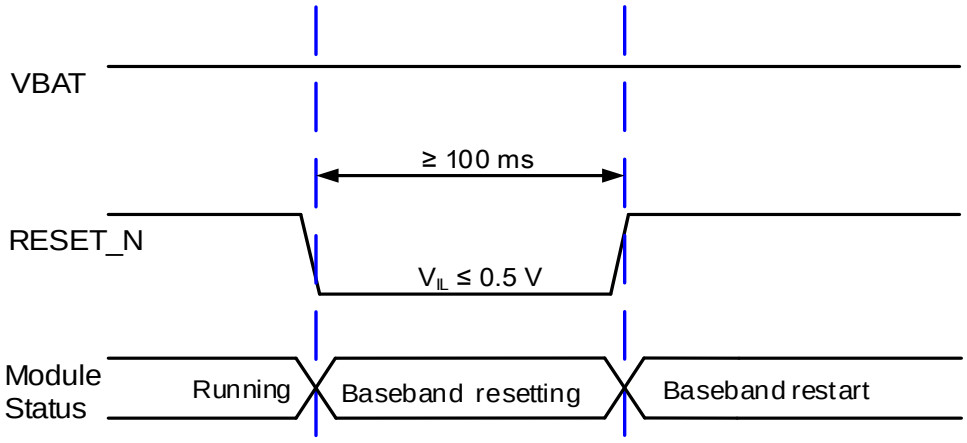

Figure 17: Timing of Resetting the Module

NOTE

1. Ensure that there is no large capacitance exceeding 10 nF on PWRKEY and RESET_N pins.
2. It is recommended to use RESET_N only when you fail to turn off the module with the **AT+QPOWD** or PWRKEY pin.

4 Application Interfaces

4.1. Analog Audio Interfaces

The module provides one analog audio input channel and one analog audio output channel. The pin definition is shown in the following table.

Table 12: Pin Definition of Analog Audio Interfaces

Pin Name	Pin No.	I/O	Description
MIC_N	119	AI	Microphone analog input (-)
MICBIAS	120	PO	Bias voltage output for microphone
SPK_P	121	AO	Analog audio differential output (+)
SPK_N	122	AO	Analog audio differential output (-)
MIC_P	126	AI	Microphone analog input (+)

- AI channels are differential input channels, which can be applied for input of microphone (usually an electret microphone is used).
- AO channels are differential output channels, which can be applied for output of handset, earpiece and loudspeaker. (Since the module has no built-in PA, the analog audio output channels SPK_P and SPK_N can be directly applied for output of handset function, and if connected with external PA, they can be used as loudspeaker function.)

4.1.1. Audio Interfaces Design Considerations

It is recommended to use the electret microphone with dual built-in capacitors (e.g., 10 pF and 33 pF) for filtering out RF interference, thus reducing TDD noise. The 33 pF capacitor is applied for filtering out RF interference when the module is transmitting at EGSM900. Without placing this capacitor, TDD noise could be heard. The 10 pF capacitor here is used for filtering out RF interference at DCS1800. Note that the resonant frequency point of a capacitor largely depends on the material and production technique. Therefore, you would have to discuss with your capacitor vendors to choose the most suitable capacitor for filtering out high-frequency noises.

The filter capacitors on the PCB board should be placed as close to the audio devices or audio interfaces as possible, and the traces should be as short as possible. They should go through the filter capacitors before arriving at other connection points.

To reduce radio or other signal interference, RF antennas should be placed away from audio interfaces and audio traces. Power traces should not be parallel with and also should be far away from the audio traces.

The differential audio traces must be routed according to the differential signal layout rule.

4.1.2. Microphone Interface Design

The microphone channel reference circuit is shown in the following figure.

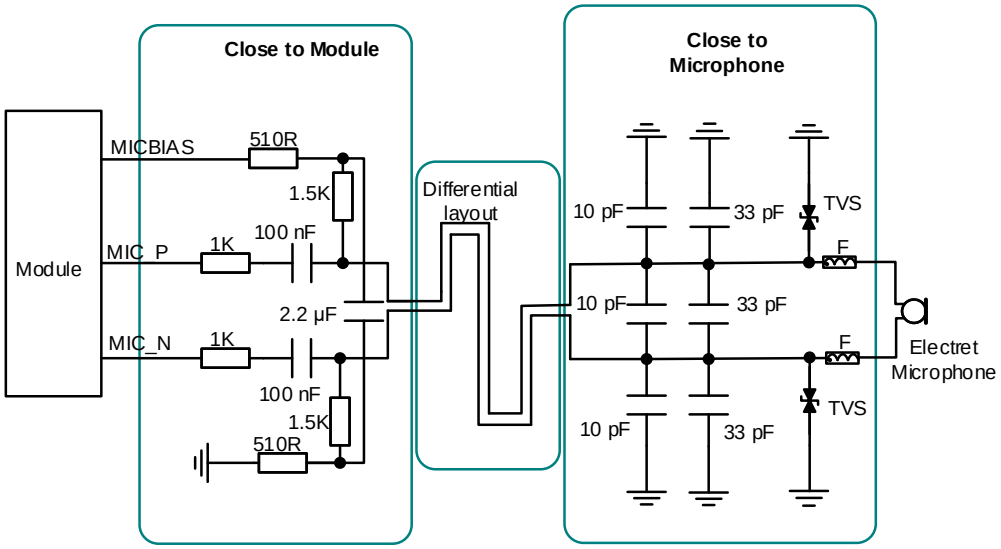

Figure 18: Reference Design for Microphone Interface

NOTE

MIC channel is sensitive to ESD, so it is not recommended to remove the ESD components used for protecting the MIC.

4.1.3. Earpiece Interface Design

The earpiece channel reference circuit is shown in the following figure:

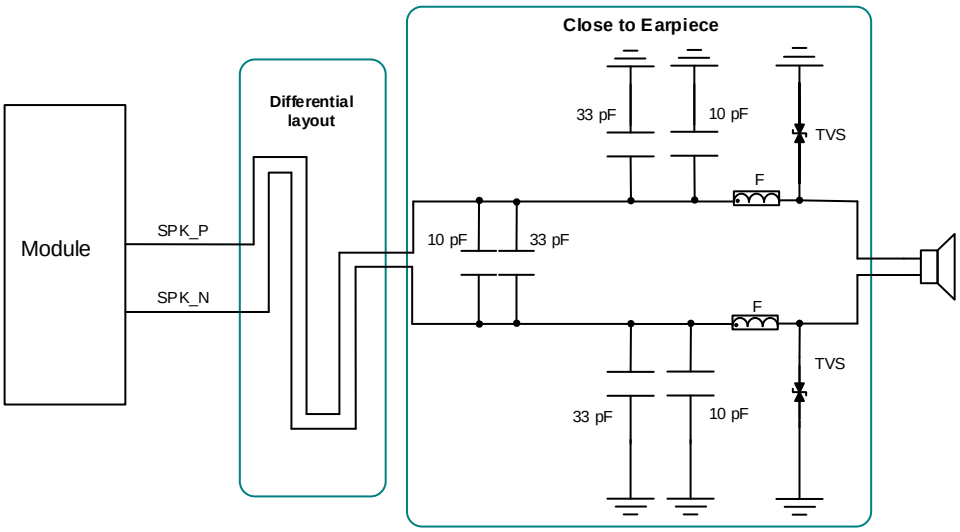

Figure 19: Reference Design for Earpiece Interface

4.2. USB Interface

The module provides an integrated Universal Serial Bus (USB) interface compliant with the USB 2.0 specification and supporting full-speed (12 Mbps) and high-speed (480 Mbps) modes. The USB interface can only serve as a slave device.

Table 13: Functions of USB Interface

Functions	
AT command communication	√
Data transmission	√
Software debugging	√
Firmware upgrade	√

Table 14: Pin Definition of USB Interface

Pin Name	Pin No.	I/O	Description	Comment
USB_VBUS	8	AI	USB connection detect	Input voltage range: 3.5 V to 5.25 V. A test point must be reserved.
USB_DP	9	AIO	USB differential data (+)	USB 2.0 compliant. Requires differential impedance of 90 Ω. Test points must be reserved.
USB_DM	10	AIO	USB differential data (-)	

For more details about the USB 2.0 specifications, visit http://www.usb.org/home.

Reserve test points for debugging and firmware upgrade in your design. The following figure shows a reference circuit of USB interface.

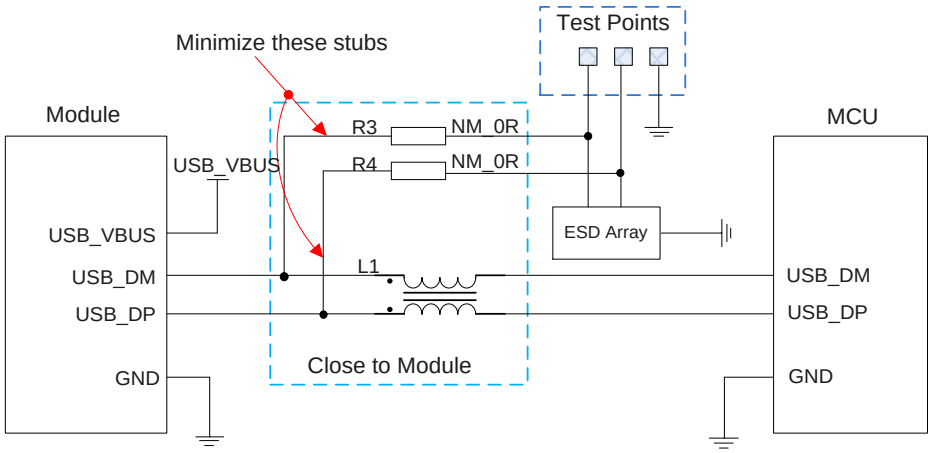

Figure 20: Reference Circuit of USB Application

A common mode choke L1 is recommended to be added in series between the module and your MCU to suppress EMI spurious transmission. Meanwhile, the 0 Ω resistors (R3 and R4) should be added in series between the module and the test points so as to facilitate debugging, and the resistors are not mounted by default. To ensure the signal integrity of USB data lines, L1, R3, and R4 must be placed close to the module, and resistors R3 and R4 should be placed close to each other. The extra stubs of trace must be as short as possible.

When designing the USB interface, you should follow the following principles to meet USB 2.0 specification.

- Route the USB signal traces as differential pairs with ground surrounded. The impedance of USB differential trace is 90 Ω.
- Do not route signal traces under or near crystals, oscillators, magnetic devices, and RF signal traces. Route the USB differential traces in inner-layer of the PCB, and surround the traces with ground on

that layer and ground planes above and below.

- Pay attention to the selection of the ESD component on the USB data line. Its stray capacitance should not exceed 2 pF and should be placed as close as possible to the USB connector.

4.3. USB_BOOT Interface

The module provides a USB_BOOT interface. Pull up USB_BOOT to VDD_EXT before powering on the module, and the module will enter the emergency download mode when it is turned on. In this mode, the module supports firmware upgrade over USB interface.

Table 15: Pin Definition of USB_BOOT Interface

Pin Name	Pin No.	I/O	Description	Comment
USB_BOOT	75	DI	Forces the module into emergency download mode	1.8 V power domain. Active high. A circuit that enables the module to enter the download mode must be reserved. A test point is recommended to be reserved.

The following figure shows a reference circuit of USB_BOOT interface.

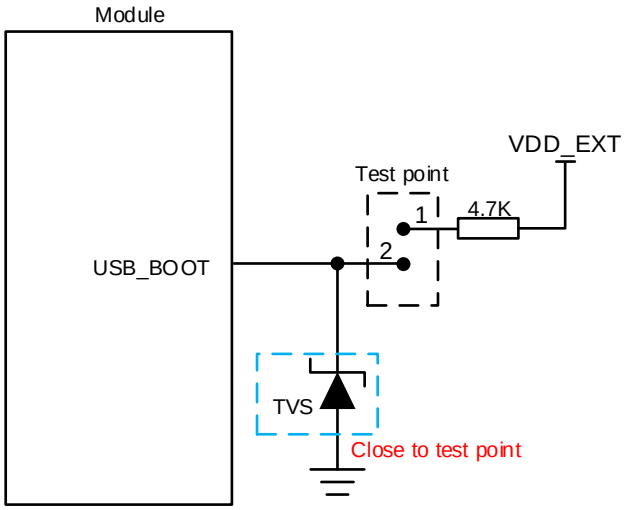

Figure 21: Reference Circuit of USB_BOOT Interface

4.4. (U)SIM Interfaces

The module provides 2 (U)SIM interfaces that support Dual SIM Single Standby. The (U)SIM interfaces circuitry meets ETSI requirement and IMT-2000 specification. Either 1.8 V or 3.0 V (U)SIM card is supported.

Table 16: Pin Definition of (U)SIM Interfaces

Pin Name	Pin No.	I/O	Description	Comment
USIM1_VDD	43	PO	(U)SIM1 card power supply	Either 1.8 V or 3.0 V (U)SIM card is supported and can be identified automatically by the module.
USIM1_DATA	45	DIO	(U)SIM1 card data	
USIM1_CLK	46	DO	(U)SIM1 card clock	
USIM1_RST	44	DO	(U)SIM1 card reset	
USIM1_DET	42	DI	(U)SIM1 card hot-plug detect	1.8 V power domain. If unused, keep it open.
USIM1_GND	47	-	Ground	Specified ground for (U)SIM1 card.
USIM2_VDD	87	PO	(U)SIM2 card power supply	Either 1.8 V or 3.0 V (U)SIM card is supported and can be identified automatically by the module.
USIM2_DATA	86	DIO	(U)SIM2 card data	
USIM2_CLK	84	DO	(U)SIM2 card clock	
USIM2_RST	85	DO	(U)SIM2 card reset	
USIM2_DET	83	DI	(U)SIM2 card hot-plug detect	1.8 V power domain. A test point must be reserved for debugging.

The module supports (U)SIM card hot-plug via the USIM_DET pin and both high- and low-level detections are supported. By default, the function is disabled, and see **AT+QSIMDET** in ***document [2]*** for more details.

The following figure shows a reference design for (U)SIM interface with an 8-pin (U)SIM card connector.

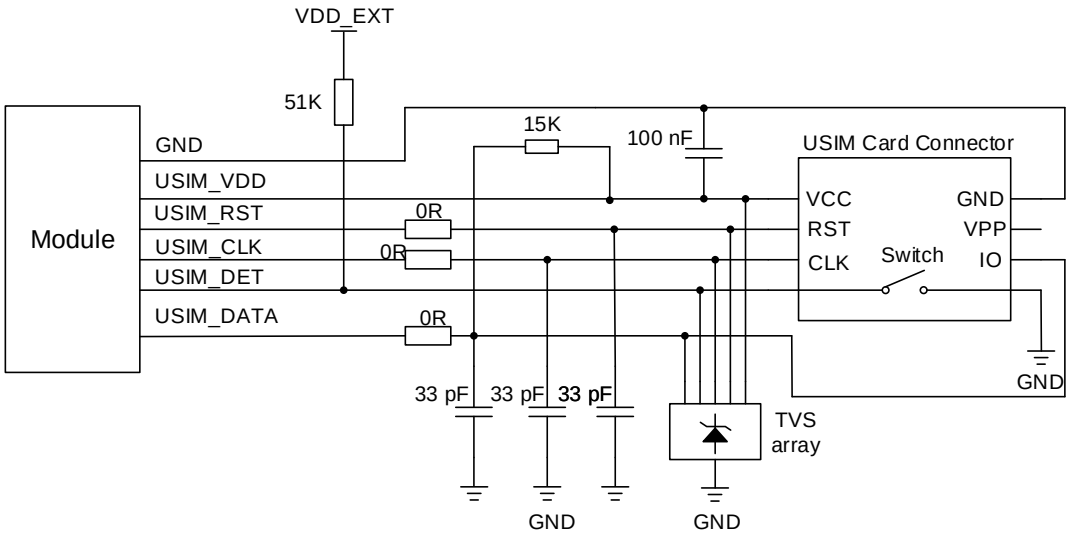

Figure 22: Reference Circuit of (U)SIM Interface with an 8-pin (U)SIM Card Connector

If (U)SIM card detection function is not needed, please keep USIM_DET unconnected. A reference circuit for (U)SIM interface with a 6-pin (U)SIM card connector is illustrated in the following figure.

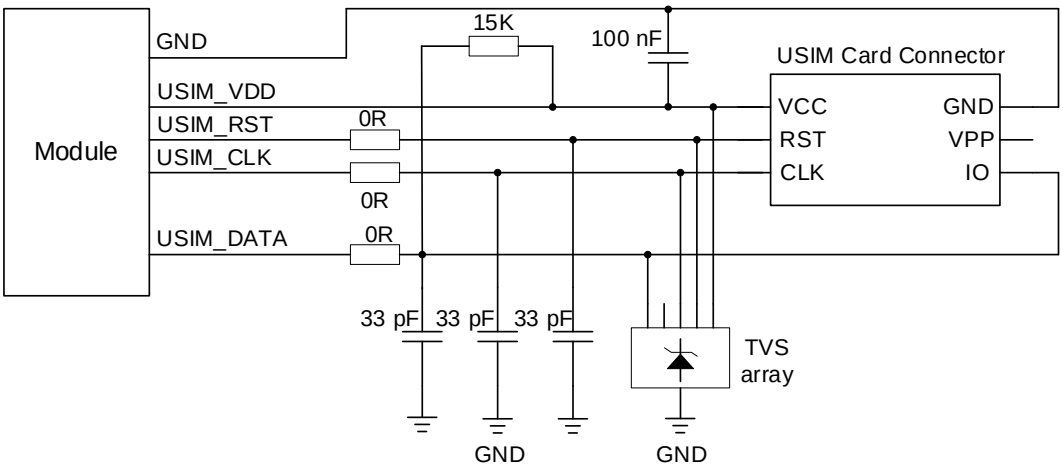

Figure 23: Reference Circuit of (U)SIM Interface with a 6-pin (U)SIM Card Connector

To enhance the reliability and availability of the (U)SIM card in applications, follow the criteria below in (U)SIM circuit design:

- Place (U)SIM card connector as close to the module as possible. Keep the trace length as short as possible, at most 200 mm.
- Keep (U)SIM card signals away from RF and VBAT traces.
- Ensure the bypass capacitor between USIM_VDD and GND is not more than 1 µF, and the capacitor should be close to the (U)SIM card connector.

- To avoid cross-talk between USIM_DATA and USIM_CLK, keep them away from each other and shield them with surrounded ground.
- To offer good ESD protection, it is recommended to add a TVS array of which the parasitic capacitance should be less than 15 pF. Add 0 Ω resistors in series between the module and the (U)SIM card to facilitate debugging. The 33 pF capacitors are used for filtering interference of EGSM900. Additionally, keep the (U)SIM peripheral circuit close to the (U)SIM card connector.
- The pull-up resistor on USIM_DATA can improve anti-jamming capability of the (U)SIM card. If the (U)SIM card traces are too long, or the interference source is relatively close, it is recommended to add a pull-up resistor near the (U)SIM card connector.

4.5. I2C and PCM Interfaces

The module provides one I2C interface and one pulse code modulation (PCM) interface. The PCM interface of the module only supports slave mode, therefore, the master clock signal of the codec IC needs to be provided externally.

PCM interface supports the short frame mode, in which PCM_CLK = Number of Channels × PCM_SYNC × 16 bits, where the number of channels supports 1–4 channels, but the module will only take the data on the first channel; PCM_SYNC is equal to the audio sampling rate, which supports 8–44.1 kHz.

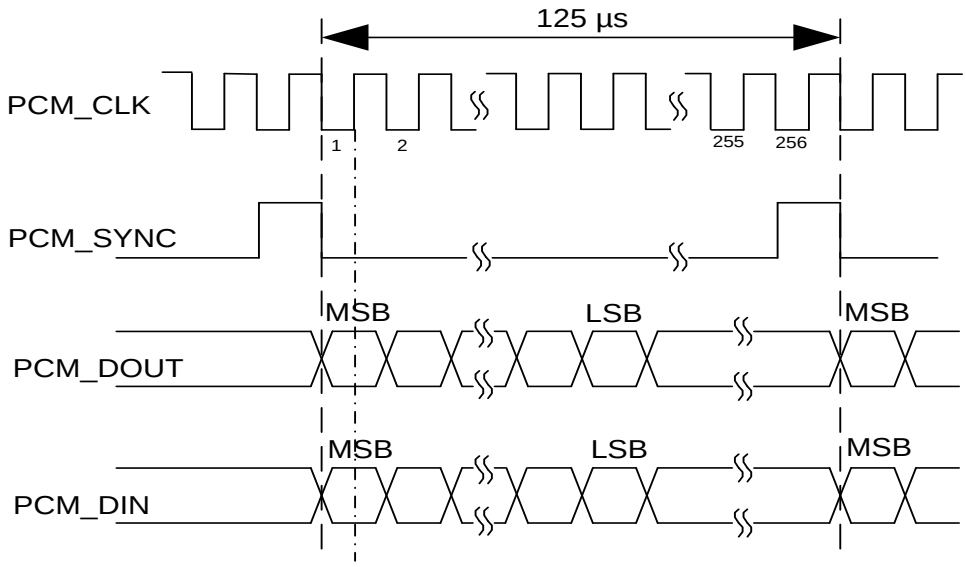

Figure 24: Timing of PCM Short Frame Mode

NOTE

The clocks of PCM_SYNC and PCM_CLK are provided by the codec IC, but the provided PCM_SYNC frequency must be equal to the sampling frequency of the audio file played by the module.

Table 17: Pin Definition of I2C and PCM Interfaces

Pin Name	Pin No.	I/O	Description	Comment
I2C_SCL	40	OD	I2C serial clock	External pull-up resistor is required. 1.8 V power domain only. If unused, keep them open.
I2C_SDA	41	OD	I2C serial data	
PCM_DIN	6	DI	PCM data input	1.8 V power domain. If unused, keep them open.
PCM_DOUT	7	DO	PCM data output	
PCM_SYNC	5	DI	PCM data frame sync	
PCM_CLK	4	DI	PCM clock	

The following figure shows a reference design of I2C and PCM interfaces with an external codec IC.

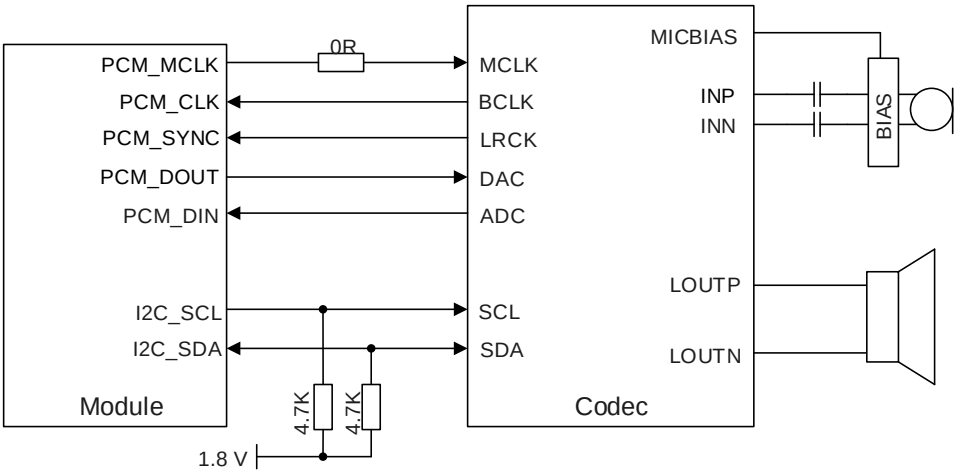

Figure 25: Reference Circuit of I2C and PCM Application with Audio Codec

NOTE

1. It is recommended to reserve a termination resistor and a filter capacitor on the PCM traces, especially for PCM_CLK.
2. The I2C interface supports simultaneous connection of multiple peripherals except for codec IC. In other words, if a codec IC has been mounted on the I2C bus, no other peripherals can be mounted; if there is no codec IC on the bus, multiple peripherals can be mounted.
3. For PCM external codec solution, it is recommended to use the clock signal provided by the module. If you need to use the PCM_MCLK function of the module, please consult Quectel Technical Support for details.

4.6. UART Interfaces

The module provides three UART interfaces: main UART, debug UART, and auxiliary UART. Their features are described as follows.

- Main UART interface supports baud rates of 4800 bps, 9600 bps, 19200 bps, 38400 bps, 57600 bps, 115200 bps, 230400 bps, 460800 bps, and 921600 bps, and the default setting is 115200 bps. It supports RTS and CTS hardware flow control. This interface is used for data transmission and AT command communication.
- Debug UART interface supports 921600 bps baud rate. It is used for log output.
- Auxiliary UART shares the same baud rate with Main UART.

The module serves as DCE (Data Communication Equipment), which is connected in the traditional DCE-DTE (Data Terminal Equipment) mode.

Table 18: Pin Definition of Main UART Interface

Pin Name	Pin No.	I/O	Description	Comment
MAIN_CTS	36	DO	DTE clear to send signal to DCE (connect to DTE's CTS)	1.8 V power domain. If unused, keep them open.
MAIN_RTS	37	DI	DTE request to send signal to DCE (connect to DTE's RTS)	
MAIN_RXD	34	DI	Main UART receive	
MAIN_DCD	38	DO	Main UART data carrier detect	
MAIN_TXD	35	DO	Main UART transmit	
MAIN_RI	39	DO	Main UART ring indication	

MAIN_DTR	30	DI	Main UART data terminal ready

Table 19: Pin Definition of Debug UART Interface

Pin Name	Pin No.	I/O	Description	Comment
DBG_RXD	22	DI	Debug UART receive	1.8 V power domain. Test points must be reserved for debugging.
DBG_TXD	23	DO	Debug UART transmit	

Table 20: Pin Definition of Auxiliary UART Interface

Pin Name	Pin No.	I/O	Description	Comment
AUX_TXD	27	DO	Auxiliary UART transmit	1.8 V power domain. If unused, keep them open.
AUX_RXD	28	DI	Auxiliary UART receive	

The module provides 1.8 V UART interfaces. Use a voltage-level translator if the application is equipped with a 3.3 V UART interface.

A voltage-level translator TXS0108EPWR provided by Texas Instruments is recommended. The following figure shows a reference design.

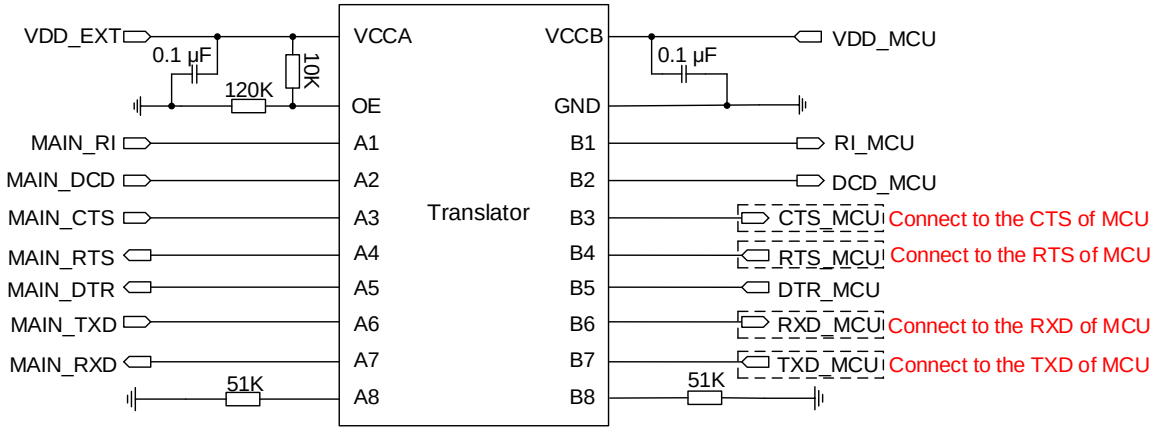

Figure 26: Reference Circuit with Voltage-level Translator

Please visit http://www.ti.com for more information.

Another example with level-shifting circuit is shown as follows. For the design of circuits in dotted lines, please refer to that of the circuits in solid lines, but please pay attention to the direction of connection.

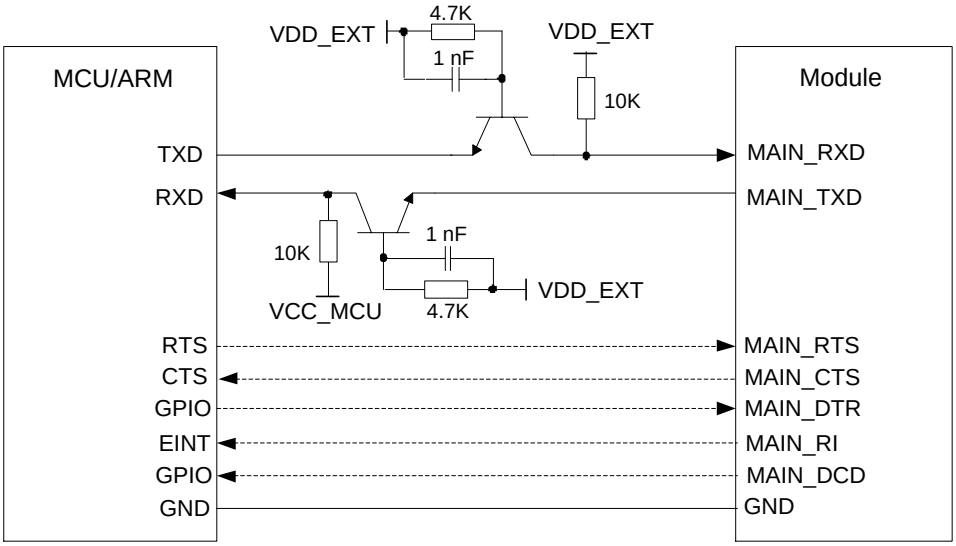

Figure 27: Reference Circuit with Transistor

NOTE

1. Transistor solution is not suitable for applications with baud rates exceeding 460 kbps.
2. Please note that the module CTS is connected to the host CTS, and the module RTS is connected to the host RTS.
3. When using pins 30, 38, and 39, please note that these pins will have a period of variable level state (not controllable by software) after the module is powered on: at high level (3.0 V) for 2 s and then at low level (0 V) for 1.2 s before they can be configured as 1.8 V input or output. Please evaluate whether the unstable level output state on power-up meets your application design requirements based on the specific usage scenario and circuit design.

4.7. ADC Interfaces

The module provides two analog-to-digital converter (ADC) interfaces. You can use **AT+QADC=0** and **AT+QADC=1** to read the voltage values on ADC0 and ADC1 respectively. See ***document [2]*** for more details.

To improve the accuracy of ADC, surround the trace of ADC with ground.

Table 21: Pin Definition of ADC Interfaces

Pin Name	Pin No.	I/O	Description	Comment
ADC0	24	AI	General-purpose ADC interfaces	It is recommended to reserve a voltage divider circuit. If unused, keep them open.
ADC1	2	AI		

Table 22: Characteristics of ADC Interfaces

Parameter	Min.	Typ.	Max.	Unit
ADC0 Voltage Range	0	-	VBAT	V
ADC1 Voltage Range	0	-	VBAT	V
ADC Resolution	-	12	-	bits

NOTE

1. The input voltage of ADC should not exceed its corresponding voltage range.
2. Do not supply any voltage to ADC pins when VBAT is removed.
3. Considering the difference of ADC voltage range among Quectel modules, when it is necessary to use ADC pins, it is strongly recommended to reserve the voltage divider circuit for better compatibility with other Quectel modules. The resistance of the divider must be less than 100 kΩ, otherwise the measurement accuracy of the ADC will be significantly reduced. When the divider circuit is not used, the ADC pins require 1 kΩ resistance in series.

4.8. SPI

The module provides an SPI that only supports master mode. It has a working voltage of 1.8 V.

Table 23: Pin Definition of SPI

Pin Name	Pin No.	I/O	Description	Comment
SPI_CLK	26	DO	SPI clock	1.8 V power domain. Supports master mode only. If unused, keep them
SPI_CS	25	DO	SPI chip select	
SPI_DIN	88	DI	SPI master mode input	

SPI_DOUT	64	DO	SPI master mode output	open.

NOTE

When the 4-wire SPI interface is connected to NOR Flash, it supports basic flash read, write, erase, and other operations, but you need to perform wear leveling. It does not support file system and can only be used for storage purpose.

4.9. Indication Signals

Table 24: Pin Definition of Indication Signals

Pin Name	Pin No.	I/O	Description	Comment
NET_STATUS	21	DO	Indicates the module's network activity status	1.8 V power domain. If unused, keep them open.
STATUS	20	DO	Indicates the module's operation status	
MAIN_RI	39	DO	Main UART ring indication	

4.9.1. NET_STATUS

The network indication pin NET_STATUS can drive the network activity status indicator. The following table describes its pin definition and working states in different network status.

Table 25: Working States of Network Connection Status/Activity Indication

Pin Name	State	Network Status
NET_STATUS	Flicker slowly (200 ms high/1800 ms low)	Network searching
	Flicker quickly (234 ms high/266 ms low)	Registered on network and idle
	Flicker rapidly (63 ms low /62 ms high)	Data transfer is ongoing
	Always high	Voice calling

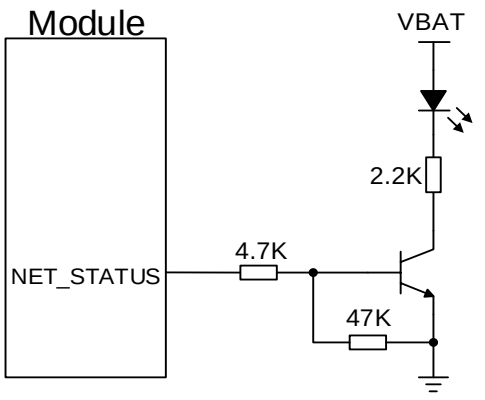

Figure 28: Reference Circuit of Network Status Indication

4.9.2. STATUS

The STATUS pin is an open drain output for indicating the module's operation status. It will output high level when module is powered on successfully.

A reference circuit is shown as below.

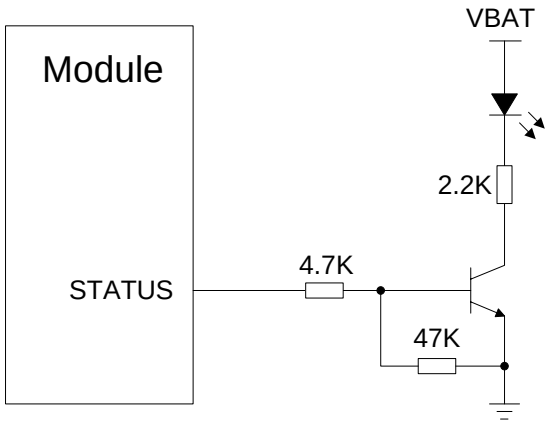

Figure 29: Reference Circuit of STATUS

4.9.3. MAIN_RI

You can configure MAIN_RI behaviors with **AT+QCFG="risignaltype","physical"**. No matter on which port a URC is presented, the URC will trigger the behaviors of MAIN_RI.

MAIN_RI behavior can be configured flexibly. The default behaviors of the MAIN_RI are shown as below.

Table 26: Behaviors of MAIN_RI

State	Response
Idle	MAIN_RI keeps at high level.
URC	MAIN_RI outputs 120 ms low pulse when a new URC returns.

The MAIN_RI behaviors can be changed via **AT+QCFG="urc/ri/ring"**. See ***document [2]*** for details.

NOTE

1. The URC can be output via UART port, USB AT port, and USB modem port, which can be set by **AT+QURCCFG**. The default setting is USB AT port.
2. When using MAIN_RI (pin 39), please note that it will have a period of variable level state (not controllable by software) after the module is powered on: at high level (3.0 V) for 2 s and then at low level (0 V) for 1.2 s before it can be configured as 1.8 V output. Please evaluate whether the unstable level output state on power-up meets your application design requirements based on the specific usage scenario and circuit design.

5 Antenna Interfaces

The module provides a main antenna interface and a Bluetooth/Wi-Fi Scan antenna interface. The impedance of antenna ports is 50 Ω.

5.1. Main Antenna and Bluetooth/Wi-Fi Scan Antenna Interfaces

5.1.1. Pin Definition

Table 27: Pin Definition of RF Antennas

Pin Name	Pin No.	I/O	Description	Comment
ANT_MAIN	60	AIO	Main antenna interface	50 Ω impedance.
ANT_BT/WIFI_SCAN	56	AIO	The shared interface for Bluetooth and Wi-Fi Scan	Bluetooth and Wi-Fi Scan cannot be used simultaneously; Wi-Fi Scan can only receive but not transmit. 50 Ω impedance. If unused, keep it open.

5.1.2. Operating Frequency

Table 28: Operating Frequency of EG915U-CN

Operating Frequency	Transmit (MHz)	Receive (MHz)
EGSM900	880–915	925–960
DCS1800	1710–1785	1805–1880
LTE-FDD B1	1920–1980	2110–2170
LTE-FDD B3	1710–1785	1805–1880
LTE-FDD B5	824–849	869–894

LTE-FDD B8	880–915	925–960
LTE-TDD B34	2010–2025	2010–2025
LTE-TDD B38	2570–2620	2570–2620
LTE-TDD B39	1880–1920	1880–1920
LTE-TDD B40	2300–2400	2300–2400
LTE-TDD B41	2535–2675	2535–2675

Table 29: Operating Frequency of EG915U-EU

Operating Frequency	Transmit (MHz)	Receive (MHz)
GSM850	824–849	869–894
PCS1900	1850–1910	1930–1990
EGSM900	880–915	925–960
DCS1800	1710–1785	1805–1880
LTE-FDD B1	1920–1980	2110–2170
LTE-FDD B3	1710–1785	1805–1880
LTE-FDD B5	824–849	869–894
LTE-FDD B7	2500–2570	2620–2690
LTE-FDD B8	880–915	925–960
LTE-FDD B20	832–862	791–821
LTE-FDD B28	703–748	758–803

Table 30: Operating Frequency of EG915U-LA

Operating Frequency	Transmit (MHz)	Receive (MHz)
GSM850	824–849	869–894
PCS1900	1850–1910	1930–1990

EGSM900	880–915	925–960
DCS1800	1710–1785	1805–1880
LTE-FDD B2	1850–1910	1930–1990
LTE-FDD B3	1710–1785	1805–1880
LTE-FDD B4	1710–1755	2110–2155
LTE-FDD B5	824–849	869–894
LTE-FDD B7	2500–2570	2620–2690
LTE-FDD B8	880–915	925–960
LTE-FDD B28	703–748	758–803
LTE-FDD B66	1710–1780	2110–2200

NOTE

Only EG915U-CN supports LTE-TDD.

5.1.3. Reference Design of Antenna Interfaces

A reference design of ANT_MAIN pin and ANT_BT/WIFI_SACN pin is shown as below. A π-type matching circuit should be reserved for better RF performance. The capacitors are not mounted by default.

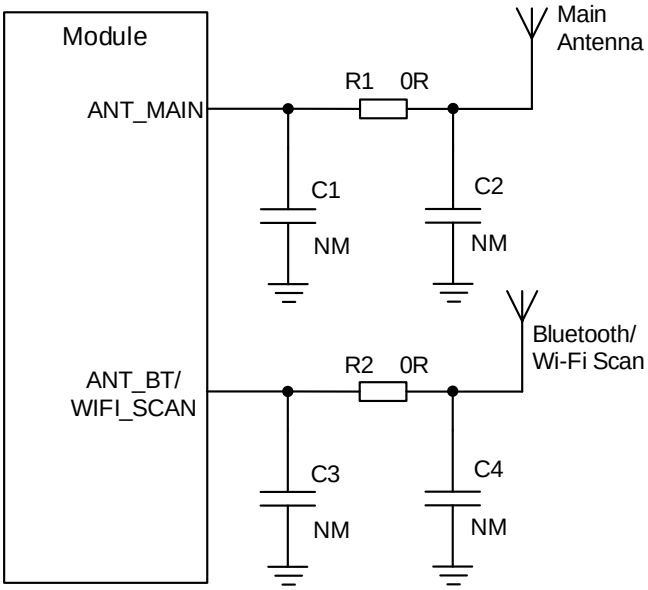

Figure 30: Reference Circuit of RF Antennas

5.1.4. RF Routing Guidelines

For user's PCB, the characteristic impedance of all RF traces should be controlled as 50 Ω. The impedance of the RF traces is usually determined by the trace width (W), the materials' dielectric constant, the height from the reference ground to the signal layer (H), and the spacing between the RF traces and the ground (S). Microstrip or coplanar waveguide is typically used in RF layout to control characteristic impedance. The following are reference designs of microstrip or coplanar waveguide with different PCB structures.

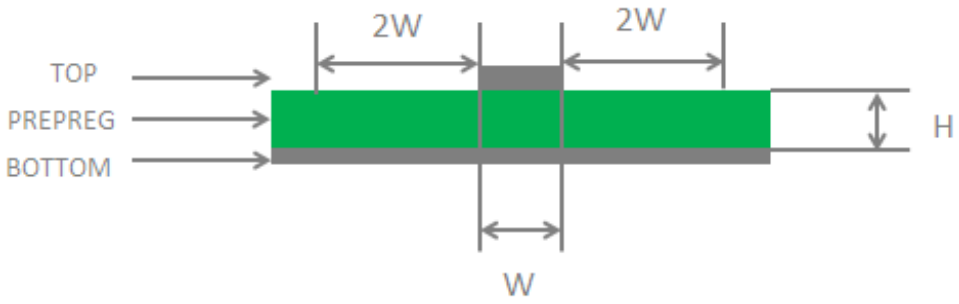

Figure 31: Microstrip Design on a 2-layer PCB

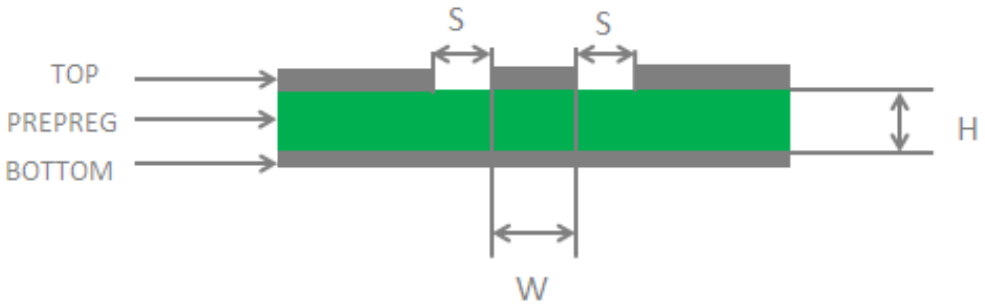

Figure 32: Coplanar Waveguide Design on a 2-layer PCB

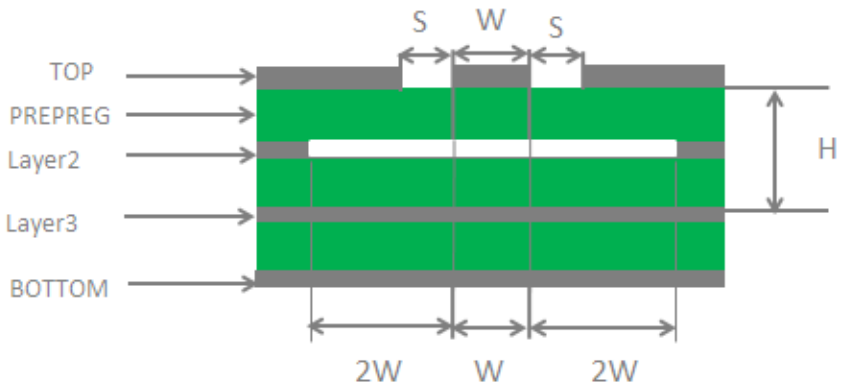

Figure 33: Coplanar Waveguide Design on a 4-layer PCB (Layer 3 as Reference Ground)

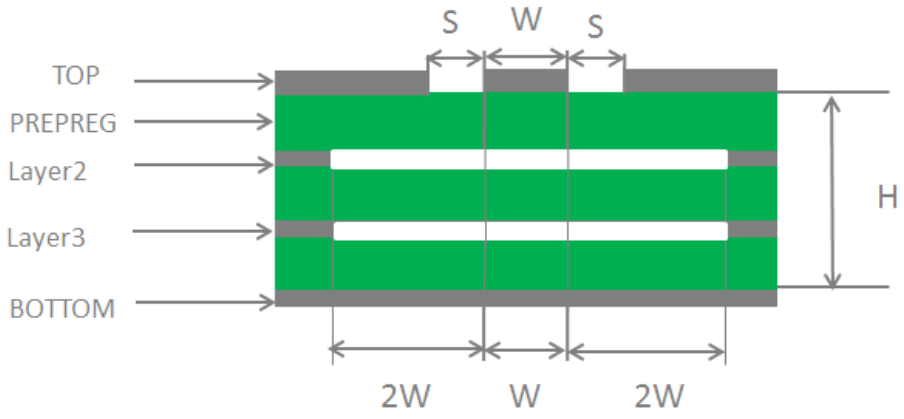

Figure 34: Coplanar Waveguide Design on a 4-layer PCB (Layer 4 as Reference Ground)

To ensure RF performance and reliability, follow the principles below in RF layout design:

- Use an impedance simulation tool to accurately control the characteristic impedance of RF traces to 50 Ω.
- The GND pins adjacent to RF pins should not be designed as thermal relief pads, and should be fully connected to ground.
- The distance between the RF pins and the RF connector should be as short as possible and all the right-angle traces should be changed to curved ones. The recommended trace angle is 135°.
- There should be clearance under the signal pin of the antenna connector or solder joint.
- The reference ground of RF traces should be complete. Meanwhile, adding some ground vias around RF traces and the reference ground could help to improve RF performance. The distance between the ground vias and RF traces should be not less than twice the width of RF signal traces (2 × W).
- Keep RF traces away from interference sources, and avoid intersection and paralleling between traces on adjacent layers.

For more details about RF layout, see ***document [4]***.

5.2. Antenna Installation

5.2.1. Antenna Design Requirement

Table 31: Requirements for Antenna Design

Type	Requirements
GSM/LTE	VSWR: ≤ 2 Efficiency: > 30 % Max. input power: 50 W Input impedance: 50 Ω Cable insertion loss: < **1 dB:** LB (< 1 GHz) < **1.5 dB:** MB (1–2.3 GHz) < **2 dB:** HB (> 2.3 GHz)

5.2.2. RF Connector Recommendation

If RF connector is used for antenna connection, it is recommended to use U.FL-R-SMT receptacle provided by Hirose.

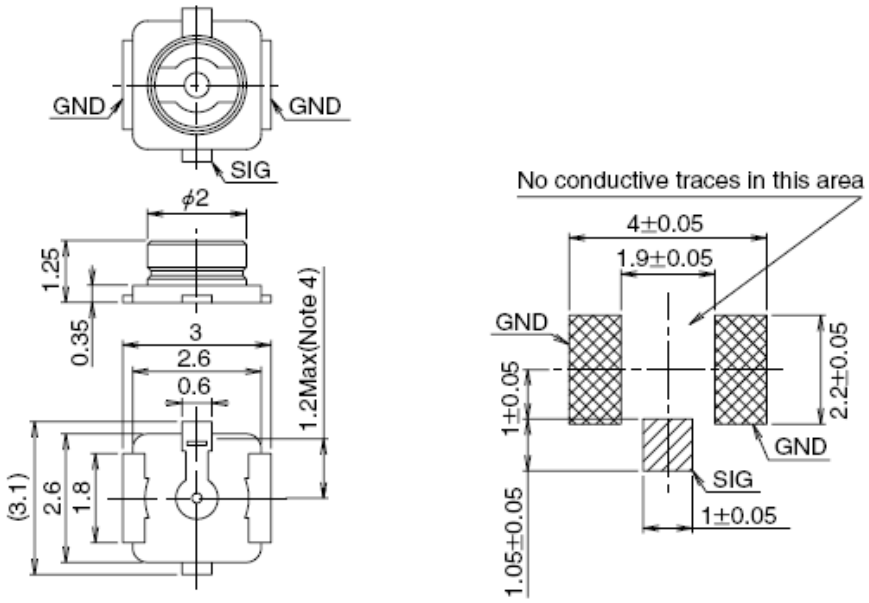

Figure 35: Dimensions of Receptacle (Unit: mm)

U.FL-LP series mated plugs listed in the following figure can be used to match the U.FL-R-SMT.

	U.FL-LP-040	U.FL-LP-066	U.FL-LP(V)-040	U.FL-LP-062	U.FL-LP-088
Part No.	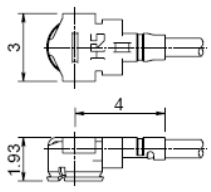	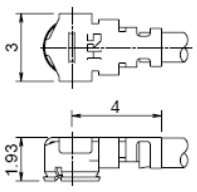	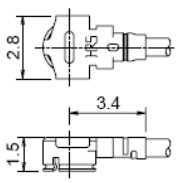	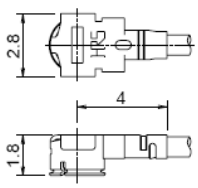	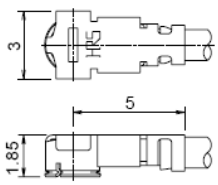
Mated Height	2.5mm Max. (2.4mm Nom.)	2.5mm Max. (2.4mm Nom.)	2.0mm Max. (1.9mm Nom.)	2.4mm Max. (2.3mm Nom.)	2.4mm Max. (2.3mm Nom.)
Applicable cable	Dia. 0.81mm Coaxial cable	Dia. 1.13mm and Dia. 1.32mm Coaxial cable	Dia. 0.81mm Coaxial cable	Dia. 1mm Coaxial cable	Dia. 1.37mm Coaxial cable
Weight (mg)	53.7	59.1	34.8	45.5	71.7
RoHS	YES				

Figure 36: Specifications of Mated Plugs

The following figure describes the space factor of mated connector.

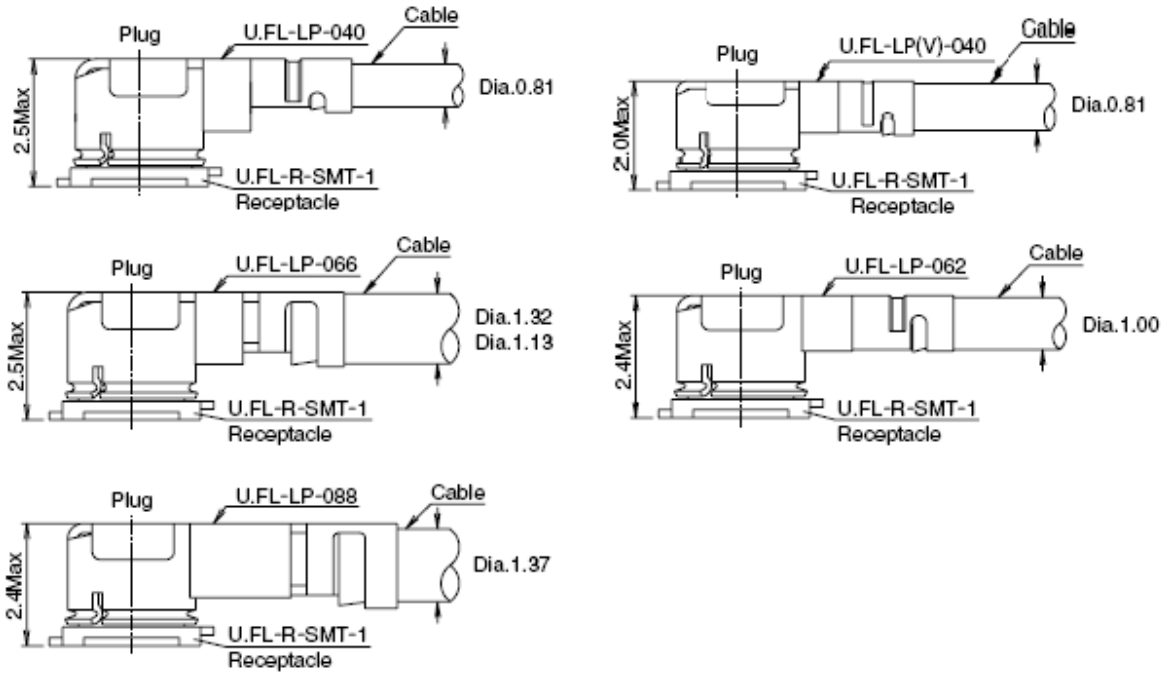

Figure 37: Space Factor of Mated Connector (Unit: mm)

For more details, please visit http://hirose.com.

6 Electrical Characteristics and Reliability

6.1. Absolute Maximum Ratings

Absolute maximum ratings for power supply and voltage on digital and analog pins of the module are listed in the following table.

Table 32: Absolute Maximum Ratings

Parameter	Min.	Max.	Unit
VBAT_RF/VBAT_BB	-0.3	6.0	V
USB_VBUS	-0.3	5.5	V
Peak Current of VBAT_BB	-	1.0	A
Peak Current of VBAT_RF	-	2.5	A
Voltage on Digital Pins	-0.3	2.3	V
Voltage at ADC0	0	VBAT	V
Voltage at ADC1	0	VBAT	V

6.2. Power Supply Ratings

Table 33: Power Supply Ratings

Parameter	Description	Conditions	Min.	Typ.	Max.	Unit
VBAT	VBAT_BB and VBAT_RF	The actual input voltages must be kept between the minimum and maximum values.	3.3	3.8	4.3	V
I_{VBAT}	Peak supply current	Maximum power control level	-	1.7	2.5	A
USB_VBUS	USB connection detection	-	3.5	5.0	5.25	V

6.3. Power Consumption

Table 34: EG915U-CN Current Consumption

Description	Conditions	Typ.	Unit
OFF state	Power down	32	μA
Sleep state	**AT+CFUN=0** (USB disconnected)	1.0	mA
	AT+CFUN=0 (USB connected)	2.2	mA
	AT+CFUN=4 (USB disconnected)	1.0	mA
	AT+CFUN=4 (USB connected)	2.3	mA
	EGSM900 @ DRX = 2 (USB disconnected)	2.0	mA
	EGSM900 @ DRX = 5 (USB disconnected)	1.5	mA
	EGSM900 @ DRX = 5 (USB connected)	2.7	mA
	EGSM900 @ DRX = 9 (USB disconnected)	1.3	mA
	DCS1800 @ DRX = 2 (USB disconnected)	2.0	mA
	DCS1800 @ DRX = 5 (USB disconnected)	1.5	mA
	DCS1800 @ DRX = 5 (USB connected)	2.7	mA

	DCS1800 @ DRX = 9 (USB disconnected)	1.3	mA
	LTE-FDD @ PF = 32 (USB disconnected)	2.5	mA
	LTE-FDD @ PF = 64 (USB disconnected)	1.8	mA
	LTE-FDD @ PF = 64 (USB connected)	3.0	mA
	LTE-FDD @ PF = 128 (USB disconnected)	1.4	mA
	LTE-FDD @ PF = 256 (USB disconnected)	1.2	mA
	LTE-TDD @ PF = 32 (USB disconnected)	2.5	mA
	LTE-TDD @ PF = 64 (USB disconnected)	1.8	mA
	LTE-TDD @ PF = 64 (USB connected)	3.1	mA
	LTE-TDD @ PF = 128 (USB disconnected)	1.4	mA
	LTE-TDD @ PF = 256 (USB disconnected)	1.2	mA
Idle state	EGSM900 @ DRX = 5 (USB disconnected)	12.6	mA
	EGSM900 @ DRX = 5 (USB connected)	28.6	mA
	LTE-FDD @ PF = 64 (USB disconnected)	13.0	mA
	LTE-FDD @ PF = 64 (USB connected)	29.0	mA
	LTE-TDD @ PF = 64 (USB disconnected)	13.0	mA
	LTE-TDD @ PF = 64 (USB connected)	29.0	mA
LTE data transfer	LTE-FDD B1 @ 22.94 dBm	587	mA
	LTE-FDD B3 @ 23.01 dBm	615	mA
	LTE-FDD B5 @ 23.54 dBm	527	mA
	LTE-FDD B8 @ 22.83 dBm	564	mA
	LTE-TDD B34 @ 23.14 dBm	280	mA
	LTE-TDD B38 @ 23.34 dBm	326	mA
	LTE-TDD B39 @ 23.25 dBm	247	mA
	LTE-TDD B40 @ 23.17 dBm	297	mA
	LTE-TDD B41 @ 22.81 dBm	311	mA

GPRS data transfer	EGSM900 4DL/1UL @ 32.87 dBm	234	mA
	EGSM900 3DL/2UL @ 30.86 dBm	348	mA
	EGSM900 2DL/3UL @ 28.90 dBm	401	mA
	EGSM900 1DL/4UL @ 26.74 dBm	415	mA
	DCS1800 4DL/1UL @ 30.13 dBm	160	mA
	DCS1800 3DL/2UL @ 28.12 dBm	221	mA
	DCS1800 2DL/3UL @ 26.01 dBm	249	mA
	DCS1800 1DL/4UL @ 23.94 dBm	258	mA
GSM voice call	EGSM900 PCL = 5 @ 32.89 dBm	256	mA
	EGSM900 PCL = 12 @ 19.41 dBm	101	mA
	EGSM900 PCL = 19 @ 6.33 dBm	72	mA
	DCS1800 PCL = 0 @ 29.99 dBm	178	mA
	DCS1800 PCL = 7 @ 16.09 dBm	84	mA
	DCS1800 PCL = 15 @ 1.26 dBm	67	mA
GSM voice call (Max. current)	EGSM900 PCL = 5 @ 32.83 dBm	1.78	A
	EGSM900 PCL = 12 @ 18.94 dBm	0.45	A
	EGSM900 PCL = 19 @ 6.18 dBm	0.19	A
	DCS1800 PCL = 0 @ 30.12 dBm	1.11	A
	DCS1800 PCL = 7 @ 15.97 dBm	0.30	A
	DCS1800 PCL = 15 @ 0.28 dBm	0.15	A

Table 35: EG915U-EU Current Consumption

Description	Conditions	Typ.	Unit
OFF state	Power down	32	µA
Sleep state	**AT+CFUN=0** (USB disconnected)	1.1	mA
	AT+CFUN=0 (USB connected)	2.3	mA

	AT+CFUN=4 (USB disconnected)	1.2	mA
	AT+CFUN=4 (USB connected)	2.4	mA
	EGSM900 @ DRX = 2 (USB disconnected)	2.1	mA
	EGSM900 @ DRX = 5 (USB disconnected)	1.8	mA
	EGSM900 @ DRX = 5 (USB connected)	2.8	mA
	EGSM900 @ DRX = 9 (USB disconnected)	1.5	mA
	DCS1800 @ DRX = 2 (USB disconnected)	2.1	mA
	DCS1800 @ DRX = 5 (USB disconnected)	1.8	mA
	DCS1800 @ DRX = 5 (USB connected)	2.7	mA
	DCS1800 @ DRX = 9 (USB disconnected)	1.5	mA
	LTE-FDD @ PF = 32 (USB disconnected)	2.7	mA
	LTE-FDD @ PF = 64 (USB disconnected)	2.1	mA
	LTE-FDD @ PF = 64 (USB connected)	3.3	mA
	LTE-FDD @ PF = 128 (USB disconnected)	1.6	mA
	LTE-FDD @ PF = 256 (USB disconnected)	1.5	mA
Idle state	EGSM900 @ DRX = 5 (USB disconnected)	12.5	mA
	EGSM900 @ DRX = 5 (USB connected)	28.1	mA
	LTE-FDD @ PF = 64 (USB disconnected)	12.5	mA
	LTE-FDD @ PF = 64 (USB connected)	28.1	mA
LTE data transfer	LTE-FDD B1 @ 22.44 dBm	595	mA
	LTE-FDD B3 @ 22.74 dBm	657	mA
	LTE-FDD B5 @ 22.17 dBm	567	mA
	LTE-FDD B7 @ 22.01 dBm	774	mA
	LTE-FDD B8 @ 22.01 dBm	533	mA
	LTE-FDD B20 @ 22.92 dBm	522	mA

	LTE-FDD B28 @ 22.56 dBm	526	mA
GPRS data transfer	GSM850 4DL/1UL @ 32.57 dBm	247	mA
	GSM850 3DL/2UL @ 30.53 dBm	365	mA
	GSM850 2DL/3UL @ 28.32 dBm	414	mA
	GSM850 1DL/4UL @ 26.07 dBm	430	mA
	EGSM900 4DL/1UL @ 32.13 dBm	234	mA
	EGSM900 3DL/2UL @ 30.45 dBm	355	mA
	EGSM900 2DL/3UL @ 28.37 dBm	408	mA
	EGSM900 1DL/4UL @ 26.33 dBm	427	mA
	DCS1800 4DL/1UL @ 29.42 dBm	155	mA
	DCS1800 3DL/2UL @ 27.95 dBm	227	mA
	DCS1800 2DL/3UL @ 25.89 dBm	253	mA
	DCS1800 1DL/4UL @ 23.79 dBm	259	mA
	PCS1900 4DL/1UL @ 29.89 dBm	163	mA
	PCS1900 3DL/2UL @ 27.78 dBm	230	mA
	PCS1900 2DL/3UL @ 25.86 dBm	260	mA
	PCS1900 1DL/4UL @ 23.70 dBm	271	mA
GSM voice call	GSM850 PCL = 5 @ 32.62 dBm	256	mA
	GSM850 PCL = 12 @ 18.71 dBm	91	mA
	GSM850 PCL = 19 @ 5.04 dBm	60	mA
	EGSM900 PCL = 5 @ 32.11 dBm	249	mA
	EGSM900 PCL = 12 @ 18.76 dBm	100	mA
	EGSM900 PCL = 19 @ 5.30 dBm	69	mA
	DCS1800 PCL = 0 @ 29.43 dBm	171	mA
	DCS1800 PCL = 7 @ 15.91 dBm	81	mA

	DCS1800 PCL = 15 @ 0.21 dBm	63	mA
	PCS1900 PCL = 0 @ 29.88 dBm	179	mA
	PCS1900 PCL = 7 @ 16.03 dBm	83	mA
	PCS1900 PCL = 15 @ 0.72 dBm	64	mA
GSM voice call (Max. current)	GSM850 PCL = 5 @ 32.82 dBm	1.88	A
	GSM850 PCL = 12 @ 19.08 dBm	0.46	A
	GSM850 PCL = 19 @ 6.12 dBm	0.19	A
	EGSM900 PCL = 5 @ 32.34 dBm	1.72	A
	EGSM900 PCL = 12 @ 19.06 dBm	0.44	A
	EGSM900 PCL = 19 @ 5.39 dBm	0.19	A
	DCS1800 PCL = 0 @ 29.89 dBm	1.13	A
	DCS1800 PCL = 7 @ 15.96 dBm	0.30	A
	DCS1800 PCL = 15 @ 0.95 dBm	0.16	A
	PCS1900 PCL = 0 @ 29.66 dBm	1.10	A
	PCS1900 PCL = 7 @ 15.59 dBm	0.33	A
	PCS1900 PCL = 15 @ 0.58 dBm	0.15	A

Table 36: EG915U-LA Current Consumption

Description	Conditions	Typ.	Unit
OFF state	Power down	32	µA
Sleep state	**AT+CFUN=0** (USB disconnected)	0.94	mA
	AT+CFUN=0 (USB connected)	2.39	mA
	AT+CFUN=4 (USB disconnected)	1.02	mA
	AT+CFUN=4 (USB connected)	2.45	mA
	EGSM900 @ DRX = 2 (USB disconnected)	1.98	mA

	EGSM900 @ DRX = 5 (USB disconnected)	1.41	mA
	EGSM900 @ DRX = 5 (USB connected)	2.86	mA
	EGSM900 @ DRX = 9 (USB disconnected)	1.28	mA
	DCS1800 @ DRX = 2 (USB disconnected)	1.95	mA
	DCS1800 @ DRX = 5 (USB disconnected)	1.44	mA
	DCS1800 @ DRX = 5 (USB connected)	2.85	mA
	DCS1800 @ DRX = 9 (USB disconnected)	1.25	mA
	LTE-FDD @ PF = 32 (USB disconnected)	2.55	mA
	LTE-FDD @ PF = 64 (USB disconnected)	1.80	mA
	LTE-FDD @ PF = 64 (USB connected)	3.24	mA
	LTE-FDD @ PF = 128 (USB disconnected)	1.41	mA
	LTE-FDD @ PF = 256 (USB disconnected)	1.23	mA
Idle state	EGSM900 @ DRX = 5 (USB disconnected)	12.11	mA
	EGSM900 @ DRX = 5 (USB connected)	27.26	mA
	LTE-FDD @ PF = 64 (USB disconnected)	12.33	mA
	LTE-FDD @ PF = 64 (USB connected)	27.65	mA
LTE data transfer	LTE-FDD B2 @ 22.93 dBm	610	mA
	LTE-FDD B3 @ 23.27 dBm	641	mA
	LTE-FDD B4 @ 23.27 dBm	766	mA
	LTE-FDD B5 @ 22.84 dBm	608	mA
	LTE-FDD B7 @ 22.65 dBm	747	mA
	LTE-FDD B8 @ 23.58 dBm	609	mA
	LTE-FDD B28 @ 23.75 dBm	587	mA
	LTE-FDD B66 @ 23.48 dBm	667	mA
GPRS data transfer	GSM850 4DL/1UL @ 32.47 dBm	241	mA
	GSM850 3DL/2UL @ 30.60 dBm	366	mA

	GSM850 2DL/3UL @ 28.53 dBm	422	mA
	GSM850 1DL/4UL @ 26.35 dBm	438	mA
	EGSM900 4DL/1UL @ 32.17 dBm	231	mA
	EGSM900 3DL/2UL @ 30.60 dBm	359	mA
	EGSM900 2DL/3UL @ 28.44 dBm	437	mA
	EGSM900 1DL/4UL @ 26.44 dBm	437	mA
	DCS1800 4DL/1UL @ 29.56 dBm	146	mA
	DCS1800 3DL/2UL @ 28.80 dBm	233	mA
	DCS1800 2DL/3UL @ 26.79 dBm	267	mA
	DCS1800 1DL/4UL @ 24.79 dBm	276	mA
	PCS1900 4DL/1UL @ 29.51 dBm	144	mA
	PCS1900 3DL/2UL @ 28.36 dBm	230	mA
	PCS1900 2DL/3UL @ 26.30 dBm	260	mA
	PCS1900 1DL/4UL @ 24.22 dBm	271	mA
GSM voice call	GSM850 PCL = 5 @ 32.82 dBm	288	mA
	GSM850 PCL = 12 @ 19.08 dBm	113	mA
	GSM850 PCL = 19 @ 6.12 dBm	80	mA
	EGSM900 PCL = 5 @ 32.34 dBm	261	mA
	EGSM900 PCL = 12 @ 19.06 dBm	112	mA
	EGSM900 PCL = 19 @ 5.39 dBm	79	mA
	DCS1800 PCL = 0 @ 29.89 dBm	187	mA
	DCS1800 PCL = 7 @ 15.96 dBm	91	mA
	DCS1800 PCL = 15 @ 0.95 dBm	72	mA
	PCS1900 PCL = 0 @ 29.66 dBm	196	mA
	PCS1900 PCL = 7 @ 15.59 dBm	94	mA
	PCS1900 PCL = 15 @ 0.58 dBm	72	mA

6.4. Tx Power

Table 37: EG915U-CN RF Tx Power

Frequency Bands	Max. RF Tx Power	Min. RF Tx Power
EGSM900	33 dBm ±2 dB	5 dBm ±5 dB
DCS1800	30 dBm ±2 dB	0 dBm ±5 dB
LTE-FDD B1/B3/B5/B8	23 dBm ±2 dB	< -39 dBm
LTE-TDD B34/B38/B39/B40/B41	23 dBm ±2 dB	< -39 dBm

Table 38: EG915U-EU RF Tx Power

Frequency Bands	Max. RF Tx Power	Min. RF Tx Power
GSM850/EGSM900	33 dBm ±2 dB	5 dBm ±5 dB
DCS1800/PCS1900	30 dBm ±2 dB	0 dBm ±5 dB
LTE-FDD B1/B3/B5/B7/B8/B20/B28	23 dBm ±2 dB	< -39 dBm

Table 39: EG915U-LA RF Tx Power

Frequency Bands	Max. RF Tx Power	Min. RF Tx Power
GSM850/EGSM900	33 dBm ±2 dB	5 dBm ±5 dB
DCS1800/PCS1900	30 dBm ±2 dB	0 dBm ±5 dB
LTE-FDD B2/B3/B4/B5/B7/B8/B28/B66	23 dBm ±2 dB	< -39 dBm

6.5. Rx Sensitivity

Table 40: EG915U-CN Conducted RF Rx Sensitivity

Frequency	Rx Sensitivity (Typ.)	3GPP (SIMO) Primary + Diversity
	Primary	
EGSM900	-108.0 dBm	-102 dBm
DCS1800	-107.5 dBm	-102 dBm
LTE-FDD B1 (10 MHz)	-97.3 dBm	-96.3 dBm
LTE-FDD B3 (10 MHz)	-98 dBm	-93.3 dBm
LTE-FDD B5 (10 MHz)	-99 dBm	-94.3 dBm
LTE-FDD B8 (10 MHz)	-99 dBm	-93.3 dBm
LTE-TDD B34 (10 MHz)	-98 dBm	-96.3 dBm
LTE-TDD B38 (10 MHz)	-97.6 dBm	-96.3 dBm
LTE-TDD B39 (10 MHz)	-98.4 dBm	-96.3 dBm
LTE-TDD B40 (10 MHz)	-98.3 dBm	-96.3 dBm
LTE-TDD B41 (10 MHz)	-97 dBm	-94.3 dBm

Table 41: EG915U-EU Conducted RF Rx Sensitivity

Frequency	Rx Sensitivity (Typ.)	3GPP (SIMO) Primary + Diversity
	Primary	
GSM850	-108 dBm	-102 dBm
EGSM900	-106.5 dBm	-102 dBm
DCS1800	-107.5 dBm	-102 dBm
PCS1900	-107 dBm	-102 dBm
LTE-FDD B1 (10 MHz)	-97 dBm	-96.3 dBm

LTE-FDD B3 (10 MHz)	-98.3 dBm	-93.3 dBm
LTE-FDD B5 (10 MHz)	-97.4 dBm	-94.3 dBm
LTE-FDD B7 (10 MHz)	-96.1 dBm	-94.3 dBm
LTE-FDD B8 (10 MHz)	-97 dBm	-93.3 dBm
LTE-FDD B20 (10 MHz)	-98.3 dBm	-93.3 dBm
LTE-FDD B28 (10 MHz)	-98.6 dBm	-94.8 dBm

Table 42: EG915U-LA Conducted RF Rx Sensitivity

Frequency	Rx Sensitivity (Typ.)	3GPP (SIMO) Primary + Diversity
	Primary	
GSM850	-108 dBm	-102 dBm
EGSM900	-106.8 dBm	-102 dBm
DCS1800	-107.5 dBm	-102 dBm
PCS1900	-107.2 dBm	-102 dBm
LTE-FDD B2 (10 MHz)	-98.1 dBm	-94.3 dBm
LTE-FDD B3 (10 MHz)	-98.2 dBm	-93.3 dBm
LTE-FDD B4 (10 MHz)	-97.5 dBm	-96.3 dBm
LTE-FDD B5 (10 MHz)	-97.4 dBm	-94.3 dBm
LTE-FDD B7 (10 MHz)	-96.1 dBm	-94.3 dBm
LTE-FDD B8 (10 MHz)	-97.5 dBm	-93.3 dBm
LTE-FDD B28 (10 MHz)	-99.4 dBm	-93.3 dBm
LTE-FDD B66 (10 MHz)	-97.9 dBm	-95.8 dBm

6.6. ESD Protection

Static electricity occurs naturally and it may damage the module. Therefore, applying proper ESD countermeasures and handling methods is imperative. For example, wear anti-static gloves during the development, production, assembly and testing of the module; add ESD protection components to the ESD sensitive interfaces and points in the product design.

Table 43: Electrostatics Discharge Characteristics (Temperature: 25–30 °C, Humidity: 40 ±5 %)

Tested Interfaces	Contact Discharge	Air Discharge	Unit
VBAT, GND	±5	±10	kV
All Antenna Interfaces	±4	±8	kV
Other Interfaces	±0.5	±1	kV

6.7. Operating and Storage Temperatures

Table 44: Operating and Storage Temperatures

Parameter	Min.	Typ.	Max.	Unit
Operating Temperature Range [5]	-35	+25	+75	ºC
Extended Operation Range [6]	-40	+25	+85	ºC
Storage Temperature Range	-40	+25	+90	ºC

[5] Within the operating temperature range, the module meets 3GPP specifications.
[6] Within the extended temperature range, the module remains the ability to establish and maintain functions such as voice, SMS, data transmission, emergency call, etc., without any unrecoverable malfunction. Radio spectrum and radio network are not influenced, while one or more specifications, such as Pout, may exceed the specified tolerances of 3GPP. When the temperature returns to the operating temperature range, the module meets 3GPP specifications again.

7 Mechanical Information

This chapter describes the mechanical dimensions of the module. All dimensions are measured in millimeter (mm), and the dimensional tolerances are ±0.2 mm unless otherwise specified.

7.1. Mechanical Dimensions

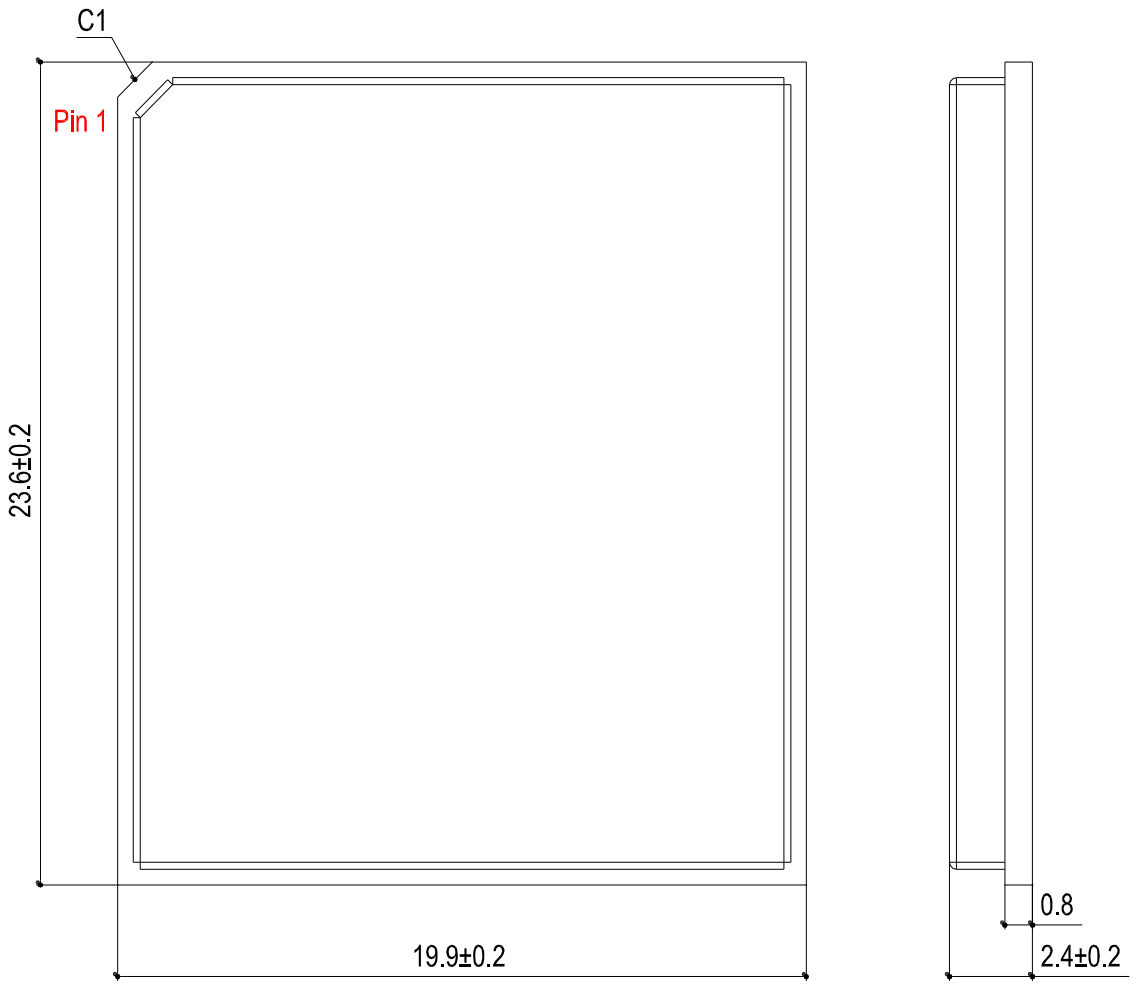

Figure 38: Module Top and Side Dimensions (Unit: mm)

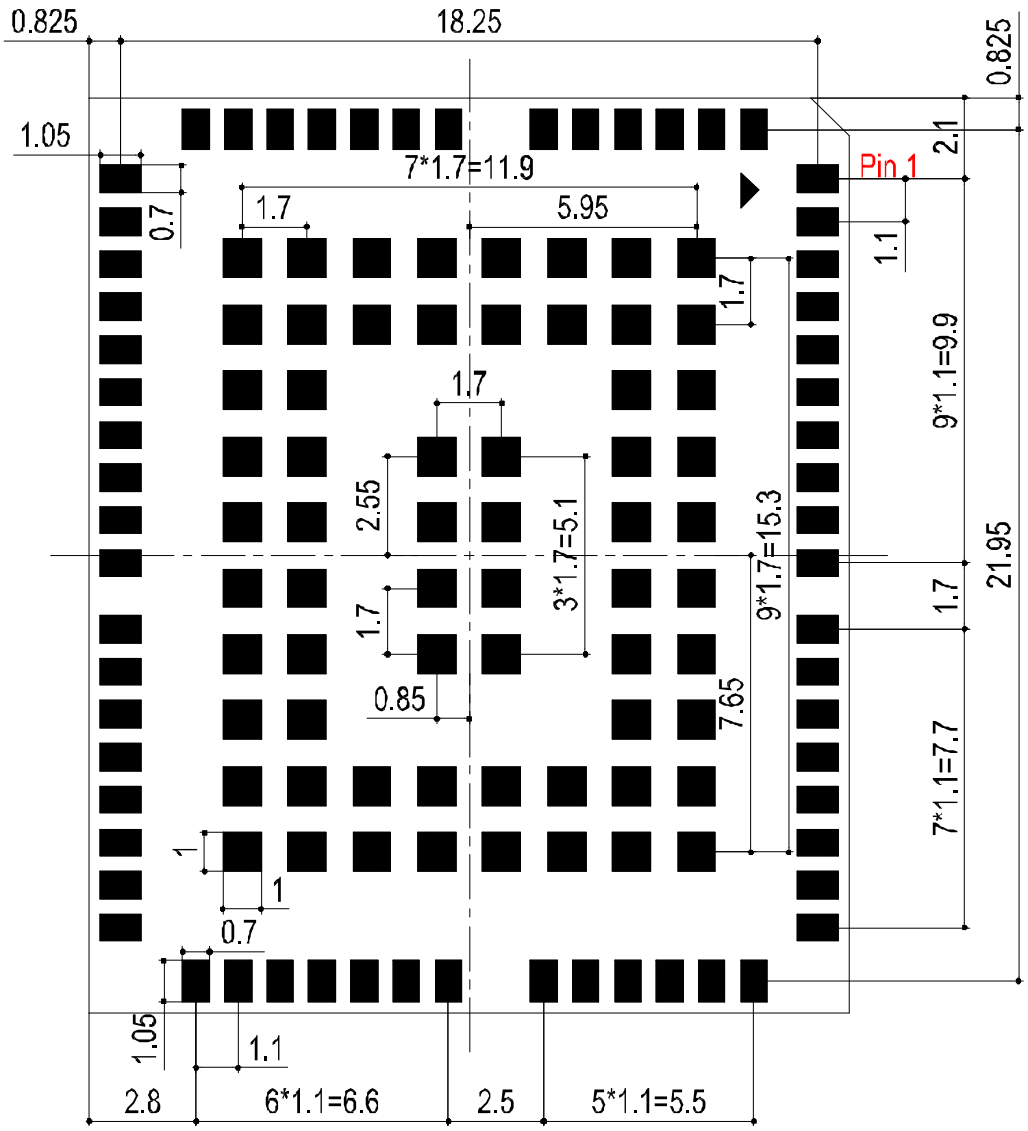

Figure 39: Module Bottom Dimensions

NOTE

The package warpage level of the module conforms to the *JEITA ED-7306* standard.

7.2. Recommended Footprint

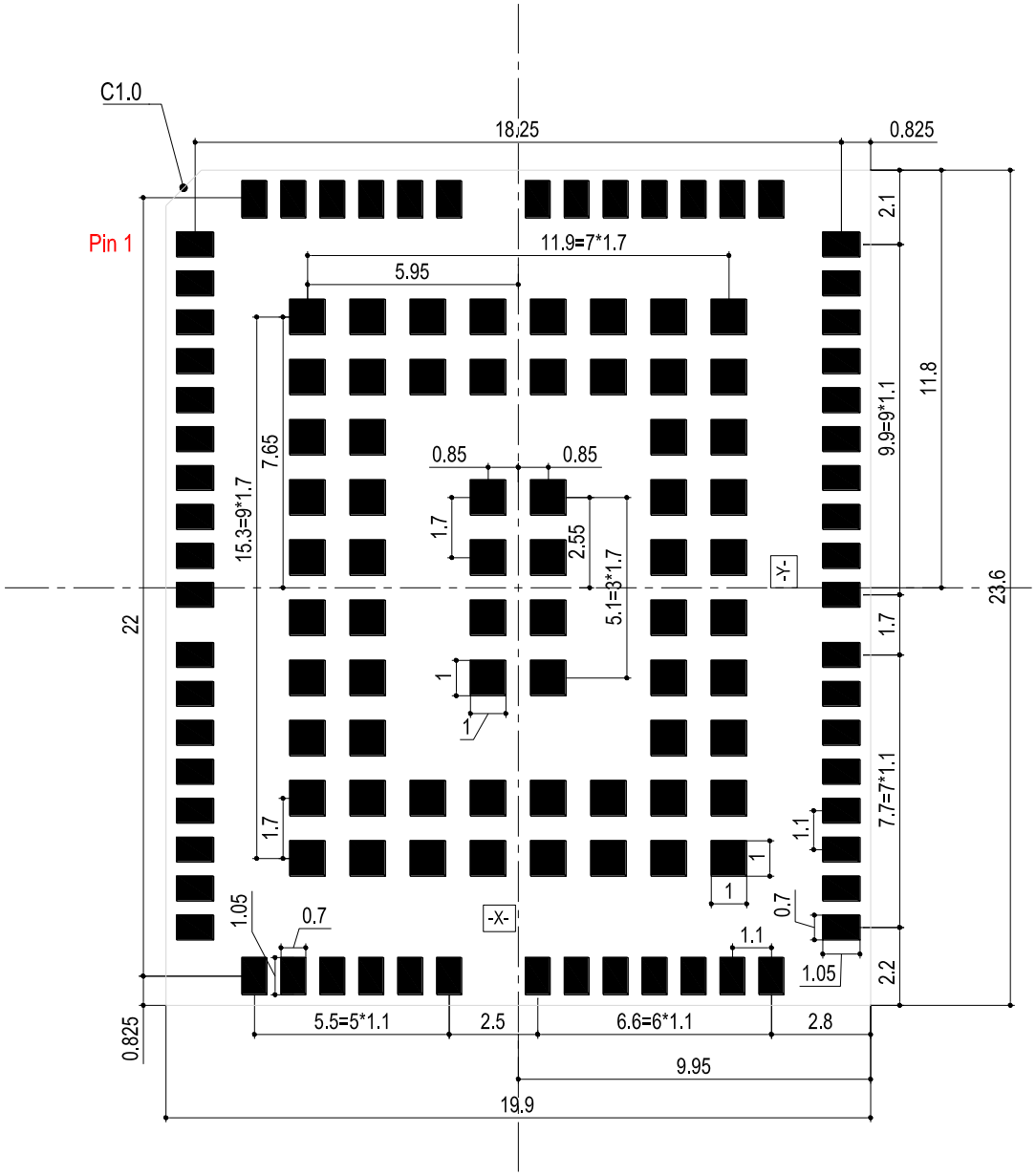

Figure 40: Recommended Footprint (Top View)

NOTE

Keep at least 3 mm between the module and other components on the motherboard to improve soldering quality and maintenance convenience.

7.3. Top and Bottom Views

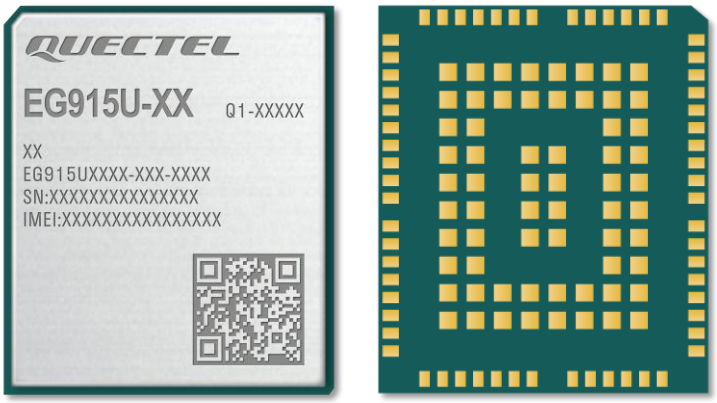

Figure 41: Top and Bottom Views

NOTE

Images above are for illustration purpose only and may differ from the actual module. For authentic appearance and label, please refer to the module received from Quectel.

8 Storage, Manufacturing, and Packaging

8.1. Storage Conditions

Module is provided with vacuum-sealed packaging. MSL of the module is rated as 3. The storage requirements are shown below.

1. Recommended Storage Condition: The temperature should be 23 ±5 °C and the relative humidity should be 35–60 %.

2. The storage life (in vacuum-sealed packaging) is 12 months in Recommended Storage Condition.

3. Floor life: 168 hours [7] in a factory where the temperature is 23 ±5 °C and relative humidity is below 60 %. After the vacuum-sealed packaging is removed, the module must be processed in reflow soldering or other high-temperature operations within 168 hours. Otherwise, the module should be stored in an environment where the relative humidity is less than 10 % (e.g., a drying cabinet).

4. The module should be pre-baked to avoid blistering, cracks and inner-layer separation in PCB under the following circumstances:

   - The module is not stored in Recommended Storage Condition;
   - Violation of the third requirement mentioned above;
   - Vacuum-sealed packaging is broken, or the packaging has been removed for over 24 hours;
   - Before module repairing.

5. If needed, the pre-baking should follow the requirements below:

   - The module should be baked for 8 hours at 120 ±5 °C;
   - The module must be soldered to PCB within 24 hours after the baking, otherwise it should be put in a dry environment such as in a dry cabinet.

[7] This floor life is only applicable when the environment conforms to *IPC/JEDEC J-STD-033*. It is recommended to start the solder reflow process within 24 hours after the package is removed if the temperature and moisture do not conform to, or are not sure to conform to *IPC/JEDEC J-STD-033*. And do not remove the packages of tremendous modules if they are not ready for soldering.

NOTE

1. To avoid blistering, layer separation and other soldering issues, extended exposure of the module to the air is forbidden.
2. Take out the module from the package and put it on high-temperature-resistant fixtures before baking. If shorter baking time is desired, see *IPC/JEDEC J-STD-033* for the baking procedure.
3. Pay attention to ESD protection, such as wearing anti-static gloves, when touching the modules.

8.2. Manufacturing and Soldering

Push the squeegee to apply the solder paste on the surface of stencil, thus making the paste fill the stencil openings and then penetrate to the PCB. Apply proper force on the squeegee to produce a clean stencil surface on a single pass. To ensure the module soldering quality, the thickness of stencil for the module is recommended to be 0.13–0.15 mm. For more details, see ***document [5]***.

The recommended peak reflow temperature should be 235–246 ºC, with 246 ºC as the absolute maximum reflow temperature. To avoid damage to the module caused by repeated heating, it is recommended that the module should be mounted only after reflow soldering for the other side of PCB has been completed. The recommended reflow soldering thermal profile (lead-free reflow soldering) and related parameters are shown below.

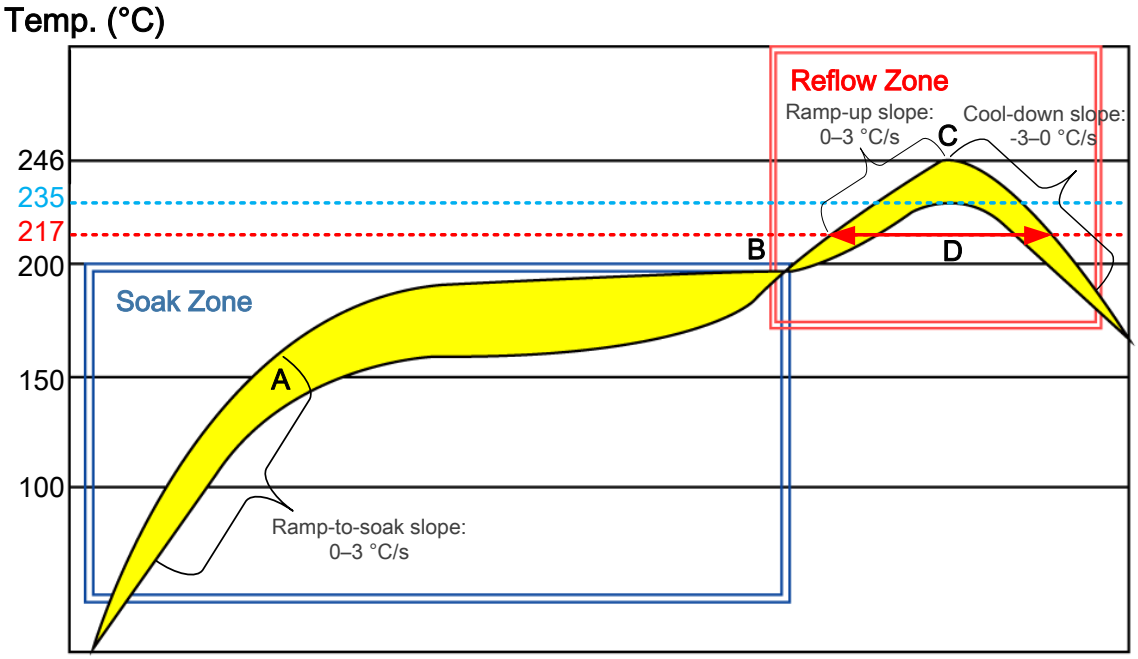

Figure 42: Recommended Reflow Soldering Thermal Profile

Table 45: Recommended Thermal Profile Parameters

Factor	Recommended Value
Soak Zone	
Ramp-to-soak slope	0–3 °C/s
Soak time (between A and B: 150 °C and 200 °C)	70–120 s
Reflow Zone	
Ramp-up slope	0–3 °C/s
Reflow time (D: over 217 °C)	40–70 s
Max. temperature	235–246 °C
Cool-down slope	-3–0 °C/s
Reflow Cycle	
Max. reflow cycle	1

NOTE

1. The above profile parameter requirements are for the measured temperature of the solder joints. Both the hottest and coldest spots of solder joints on the PCB should meet the above requirements.
2. During manufacturing and soldering, or any other processes that may contact the module directly, NEVER wipe the module's shielding can with organic solvents, such as acetone, ethyl alcohol, isopropyl alcohol, trichloroethylene, etc. Otherwise, the shielding can may become rusted.
3. The shielding can for the module is made of Cupro-Nickel base material. It is tested that after 12 hours' Neutral Salt Spray test, the laser engraved label information on the shielding can is still clearly identifiable and the QR code is still readable, although white rust may be found.
4. If a conformal coating is necessary for the module, do NOT use any coating material that may chemically react with the PCB or shielding cover, and prevent the coating material from flowing into the module.
5. Avoid using ultrasonic technology for module cleaning since it can damage crystals inside the module.
6. Due to the complexity of the SMT process, please contact Quectel Technical Support in advance for any situation that you are not sure about, or any process (e.g., selective soldering, ultrasonic soldering) that is not mentioned in ***document [5]***.

8.3. Packaging Specifications

This chapter describes only the key parameters and process of packaging. All figures below are for reference only. The appearance and structure of the packaging materials are subject to the actual delivery.

The module adopts carrier tape packaging and details are as follow:

8.3.1. Carrier Tape

Dimension details are as follow:

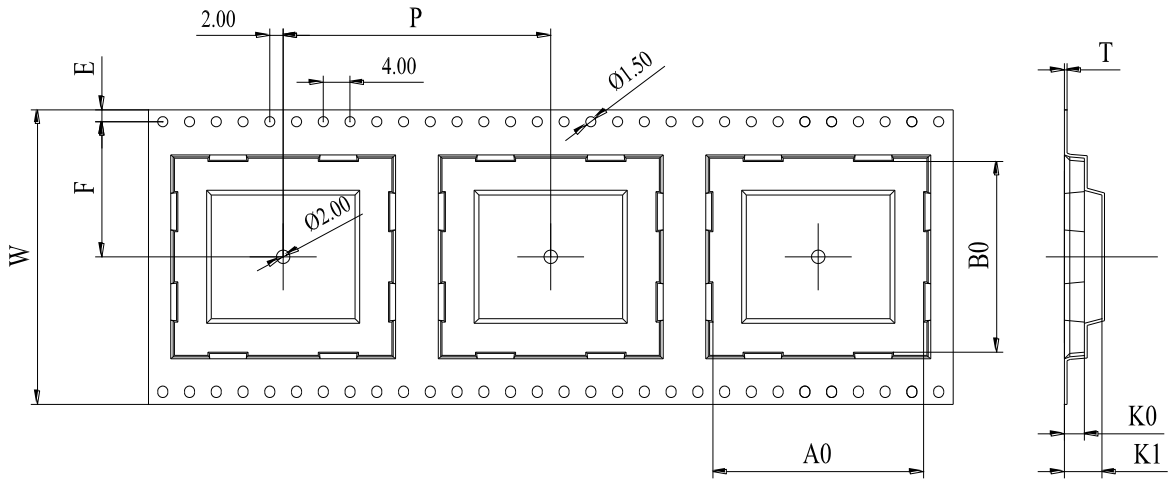

Figure 43: Carrier Tape Dimension Drawing

Table 46: Carrier Tape Dimension Table (Unit: mm)

W	P	T	A0	B0	K0	K1	F	E
44	32	0.35	20.2	24	3.15	6.65	20.2	1.75

8.3.2. Plastic Reel

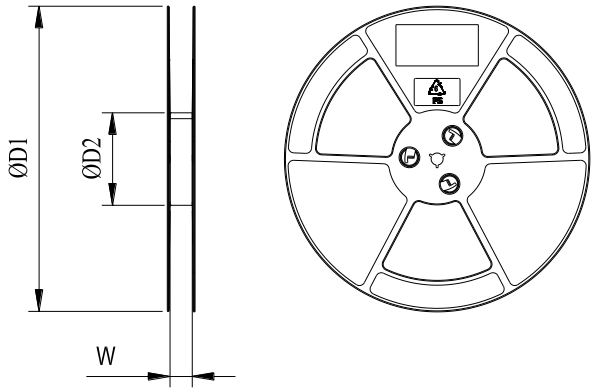

Figure 44: Plastic Reel Dimension Drawing

Table 47: Plastic Reel Dimension Table (Unit: mm)

øD1	øD2	W
330	100	44.5

8.3.3. Mounting Direction

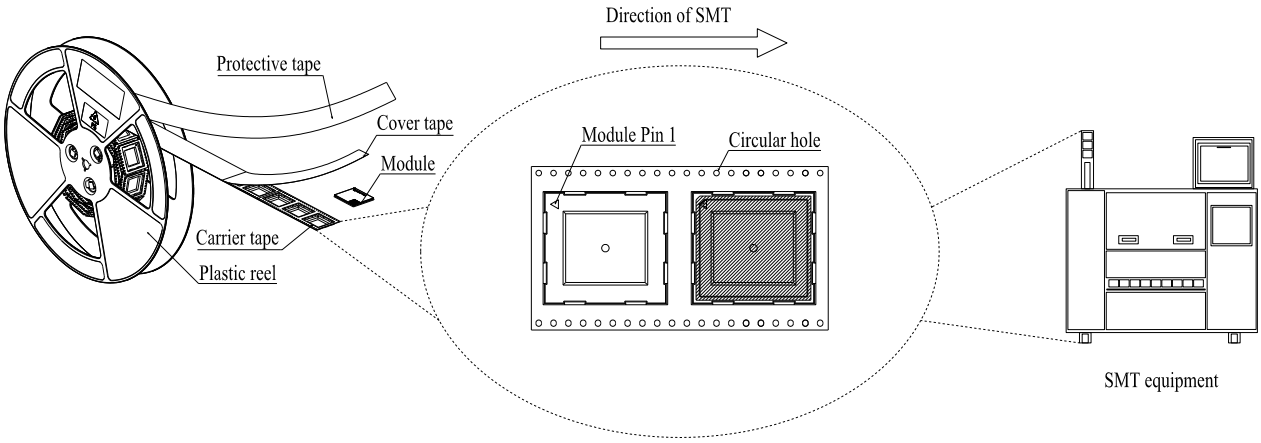

Figure 45: Mounting Direction

8.3.4. Packaging Process

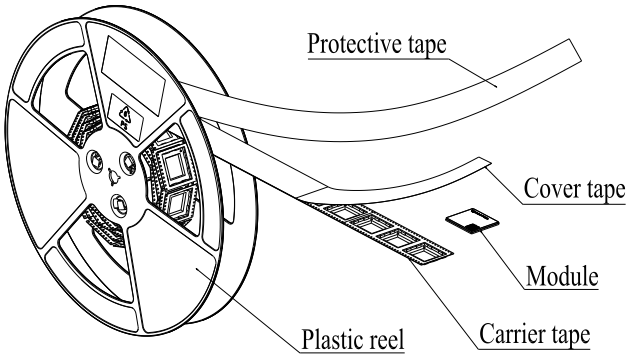

Place the module into the carrier tape and use the cover tape to cover it; then wind the heat-sealed carrier tape to the plastic reel and use the protective tape for protection. 1 plastic reel can load 250 modules.

Place the packaged plastic reel, 1 humidity indicator card and 1 desiccant bag into a vacuum bag, vacuumize it.

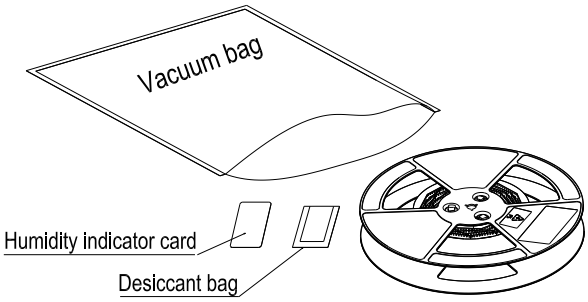

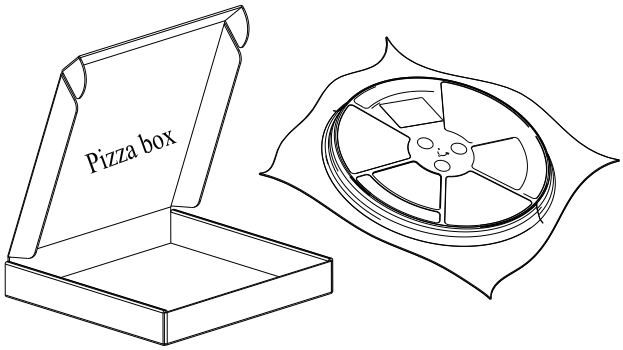

Place the vacuum-packed plastic reel into the pizza box.

Put 4 packaged pizza boxes into 1 carton and seal it. 1 carton can pack 1000 modules.

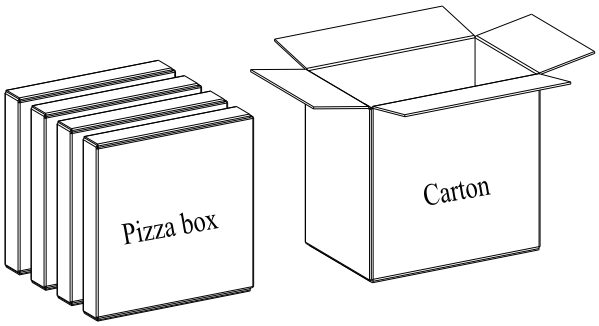

Figure 46: Packaging Process

9 Appendix References

Table 48: Related Documents

Document Name	
[1]	Quectel_UMTS&LTE_EVB_User_Guide
[2]	Quectel_EC200U&EG91xU_Series_AT_Commands_Manual
[3]	Quectel_EC200U&EG91xU_Series_Low_Power_Mode_Application_Note
[4]	Quectel_RF_Layout_Application_Note
[5]	Quectel_Module_SMT_Application_Note

Table 49: Terms and Abbreviations

Abbreviation	Description
ADC	Analog-to-Digital Converter
AMR-WB	Adaptive Multi-Rate Wideband
AP	Application Processor
bps	Bits Per Second
CA	Carrier Aggregation
CHAP	Challenge Handshake Authentication Protocol
CS	Coding Scheme
CTS	Clear To Send
DCE	Data Communications Equipment
DFOTA	Delta Firmware Upgrade Over The Air
DL	Downlink

DRX	Discontinuous Reception
DRX	Diversity Receive
DTE	Data Terminal Equipment
DTR	Data Terminal Ready
EFR	Enhanced Full Rate
ESD	Electrostatic Discharge
FDD	Frequency Division Duplex
GNSS	Global Navigation Satellite System
GPS	Global Positioning System
GRFC	General RF Control
HB	High Band
HR	Half Rate
I/O	Input/Output
LB	Low Band
LGA	Land Grid Array
LTE	Long Term Evolution
MB	Middle Band
MCU	Microcontroller Unit
MT	Mobile Terminated
PA	Power Amplifier
PAP	Password Authentication Protocol
PC	Personal Computer
PCB	Printed Circuit Board
PCM	Pulse Code Modulation
PDU	Protocol Data Unit

QAM	Quadrature Amplitude Modulation
QPSK	Quadrature Phase Shift Keying
RI	Ring Indicator
RF	Radio Frequency
Rx	Receive
SIMO	Single Input Multiple Output
SMS	Short Message Service
SPI	Serial Peripheral Interface
TDD	Time Division Duplexing
Tx	Transmit
UART	Universal Asynchronous Receiver/Transmitter
UL	Uplink
UMTS	Universal Mobile Telecommunications System
URC	Unsolicited Result Code
USB	Universal Serial Bus
(U)SIM	Universal Subscriber Identity Module
VBAT	Voltage at Battery (Pin)
Vmax	Maximum Voltage Value
Vnom	Nominal Voltage Value
Vmin	Minimum Voltage Value
V_{IH}max	Maximum High-level Input Voltage
V_{IH}min	Minimum High-level Input Voltage
V_{IL}max	Maximum Low-level Input Voltage
V_{IL}min	Minimum Low-level Input Voltage
V_{I}max	Absolute Maximum Input Voltage

$V_I$min	Absolute Minimum Input Voltage
Vo	Voltage Output
V_{OH}max	Maximum High-level Output Voltage
V_{OH}min	Minimum High-level Output Voltage
V_{OL}max	Maximum Low-level Output Voltage
V_{OL}min	Minimum Low-level Output Voltage
VSWR	Voltage Standing Wave Ratio