EG915U Series

Reference Design

LTE Standard Module Series

Version: 1.1

Date: 2023-04-21

Status: Released

At Quectel, our aim is to provide timely and comprehensive services to our customers. If you require any assistance, please contact our headquarters:

Quectel Wireless Solutions Co., Ltd.
Building 5, Shanghai Business Park Phase III (Area B), No.1016 Tianlin Road, Minhang District, Shanghai 200233, China
Tel: +86 21 5108 6236
Email: info@quectel.com

Or our local offices. For more information, please visit:
http://www.quectel.com/support/sales.htm.
For technical support, or to report documentation errors, please visit:
http://www.quectel.com/support/technical.htm.
Or email us at: support@quectel.com.

Legal Notices

We offer information as a service to you. The provided information is based on your requirements and we make every effort to ensure its quality. You agree that you are responsible for using independent analysis and evaluation in designing intended products, and we provide reference designs for illustrative purposes only. Before using any hardware, software or service guided by this document, please read this notice carefully. Even though we employ commercially reasonable efforts to provide the best possible experience, you hereby acknowledge and agree that this document and related services hereunder are provided to you on an “as available” basis. We may revise or restate this document from time to time at our sole discretion without any prior notice to you.

Use and Disclosure Restrictions

License Agreements

Documents and information provided by us shall be kept confidential, unless specific permission is granted. They shall not be accessed or used for any purpose except as expressly provided herein.

Copyright

Our and third-party products hereunder may contain copyrighted material. Such copyrighted material shall not be copied, reproduced, distributed, merged, published, translated, or modified without prior written consent. We and the third party have exclusive rights over copyrighted material. No license shall be granted or conveyed under any patents, copyrights, trademarks, or service mark rights. To avoid ambiguities, purchasing in any form cannot be deemed as granting a license other than the normal non-exclusive, royalty-free license to use the material. We reserve the right to take legal action for noncompliance with abovementioned requirements, unauthorized use, or other illegal or malicious use of the material.

Trademarks

Except as otherwise set forth herein, nothing in this document shall be construed as conferring any rights to use any trademark, trade name or name, abbreviation, or counterfeit product thereof owned by Quectel or any third party in advertising, publicity, or other aspects.

Third-Party Rights

This document may refer to hardware, software and/or documentation owned by one or more third parties ("third-party materials"). Use of such third-party materials shall be governed by all restrictions and obligations applicable thereto.

We make no warranty or representation, either express or implied, regarding the third-party materials, including but not limited to any implied or statutory, warranties of merchantability or fitness for a particular purpose, quiet enjoyment, system integration, information accuracy, and non-infringement of any third-party intellectual property rights with regard to the licensed technology or use thereof. Nothing herein constitutes a representation or warranty by us to either develop, enhance, modify, distribute, market, sell, offer for sale, or otherwise maintain production of any our products or any other hardware, software, device, tool, information, or product. We moreover disclaim any and all warranties arising from the course of dealing or usage of trade.

Privacy Policy

To implement module functionality, certain device data are uploaded to Quectel's or third-party's servers, including carriers, chipset suppliers or customer-designated servers. Quectel, strictly abiding by the relevant laws and regulations, shall retain, use, disclose or otherwise process relevant data for the purpose of performing the service only or as permitted by applicable laws. Before data interaction with third parties, please be informed of their privacy and data security policy.

Disclaimer

a) We acknowledge no liability for any injury or damage arising from the reliance upon the information.
b) We shall bear no liability resulting from any inaccuracies or omissions, or from the use of the information contained herein.
c) While we have made every effort to ensure that the functions and features under development are free from errors, it is possible that they could contain errors, inaccuracies, and omissions. Unless otherwise provided by valid agreement, we make no warranties of any kind, either implied or express, and exclude all liability for any loss or damage suffered in connection with the use of features and functions under development, to the maximum extent permitted by law, regardless of whether such loss or damage may have been foreseeable.
d) We are not responsible for the accessibility, safety, accuracy, availability, legality, or completeness of information, advertising, commercial offers, products, services, and materials on third-party websites and third-party resources.

Copyright © Quectel Wireless Solutions Co., Ltd. 2023. All rights reserved.

About the Document

Revision History

Version	Date	Author	Description
-	2021-09-18	Reuben WANG/ Ailsa WANG/ Frank WANG	Creation of the document
1.0	2021-10-26	Reuben WANG/ Ailsa WANG/ Frank WANG	First official release
1.1	2023-04-21	Phoebe FU/ Woping WANG	1. Updated the voltage range of ADC from 0.1 V–VBAT to 0 V–VBAT (Sheet 1). 2. Added a note on Wi-Fi Scan and Bluetooth functions (Sheets 1 & 6). 3. Deleted the circuit and note of USB_BOOT_MCU (Sheets 1 & 4). 4. Added an ESD protection component on VDD_EXT trace and added a relevant note (Sheet 3). 5. Added ESD protection components in antenna interface design and added a relevant note (Sheet 6). 6. Updated Note 1 and added a note on audio PA output voltage (Sheet 8). 7. Added 10 pF & 33 pF capacitors to filter out radio frequency interference and added Note 3 on ESD protection components (Sheet 9).

Contents

About the Document **1**
Contents **4**

1 Reference Design **5**
1.1. Introduction 5
1.2. Schematics 5

1 Reference Design

1.1. Introduction

This document provides the reference design for Quectel EG915U series module, including the design of power supply, UART, (U)SIM, audio interfaces, etc.

1.2. Schematics

The schematics illustrated in the following pages are provided for your reference only.

Block Diagram

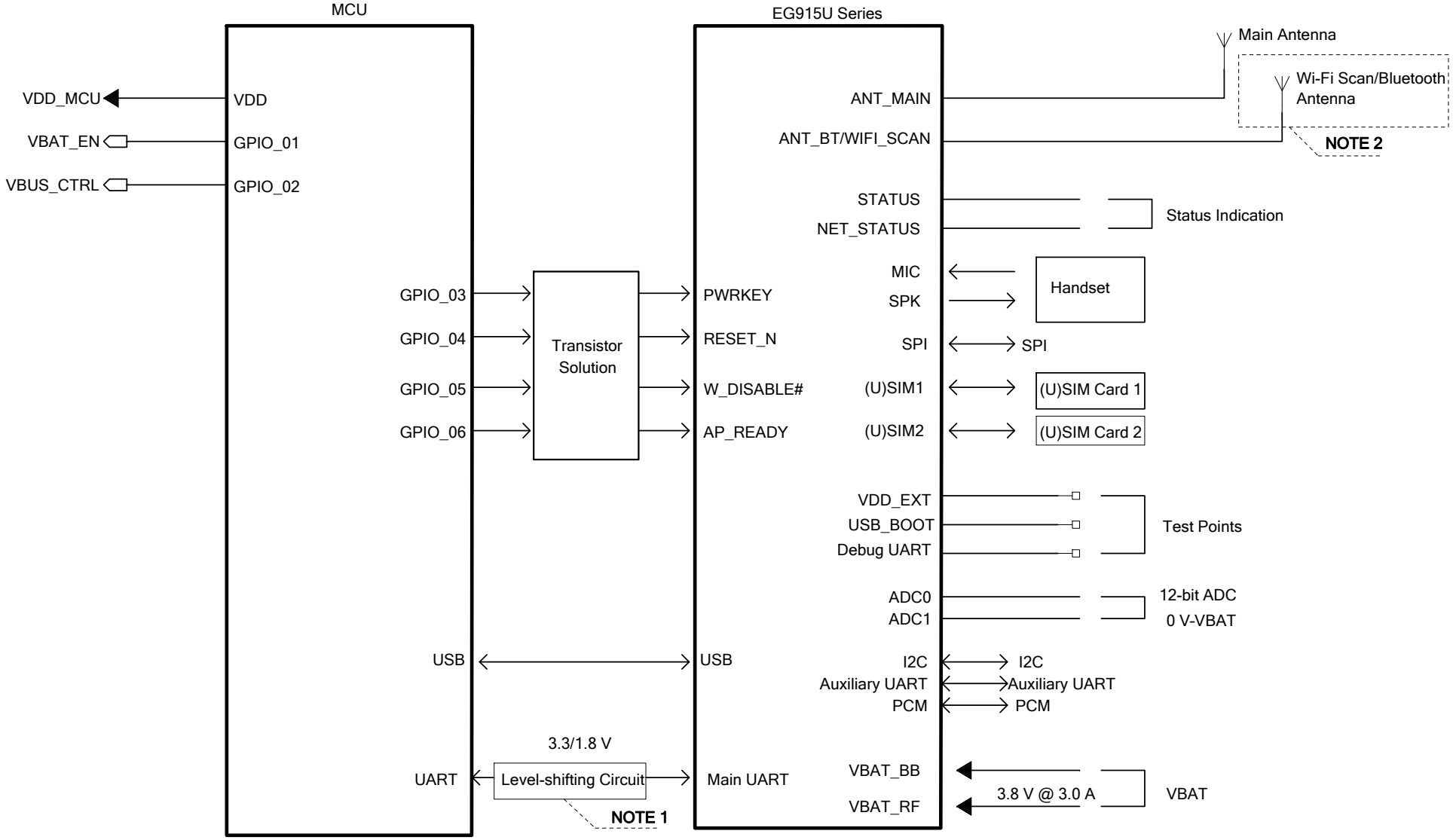

NOTE:
1. A level-shifting circuit with a transistor or a voltage-level translator TXS0108E provided by Texas Instruments is recommended.
2. The module supports Bluetooth and Wi-Fi Scan functions. Due to the shared antenna interface, the two functions cannot be used simultaneously. Bluetooth and Wi-Fi Scan functions are optional (both supported or not), and please contact Quectel Technical Support for details.

Quectel Wireless Solutions		
DRAWN BY Phoebe FU	PROJECT EG915U Series	TITLE Reference Design
CHECKED BY Anla HUANG	SIZE A2	VER 1.1
	SHEET 1 OF 12	DATE 2023/4/21

Power System Block Diagram

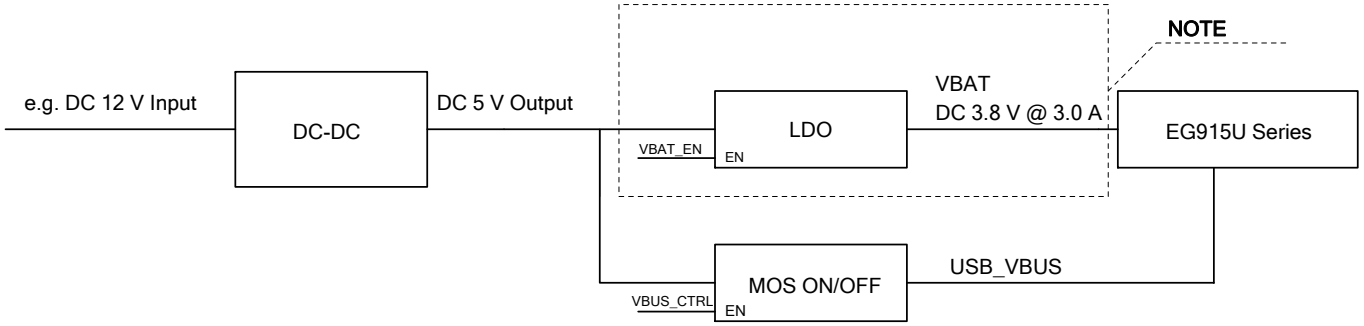

NOTE:

The LDO is used to convert the input voltage to typical 3.8 V and the power supply should provide at least 3 A current for the module.

Quectel Wireless Solutions		
DRAWN BY Phoebe FU	PROJECT EG915U Series	TITLE Reference Design
CHECKED BY Anla HUANG	SIZE A2	VER 1.1
	SHEET 2 OF 12	DATE 2023/4/21

Module Interfaces

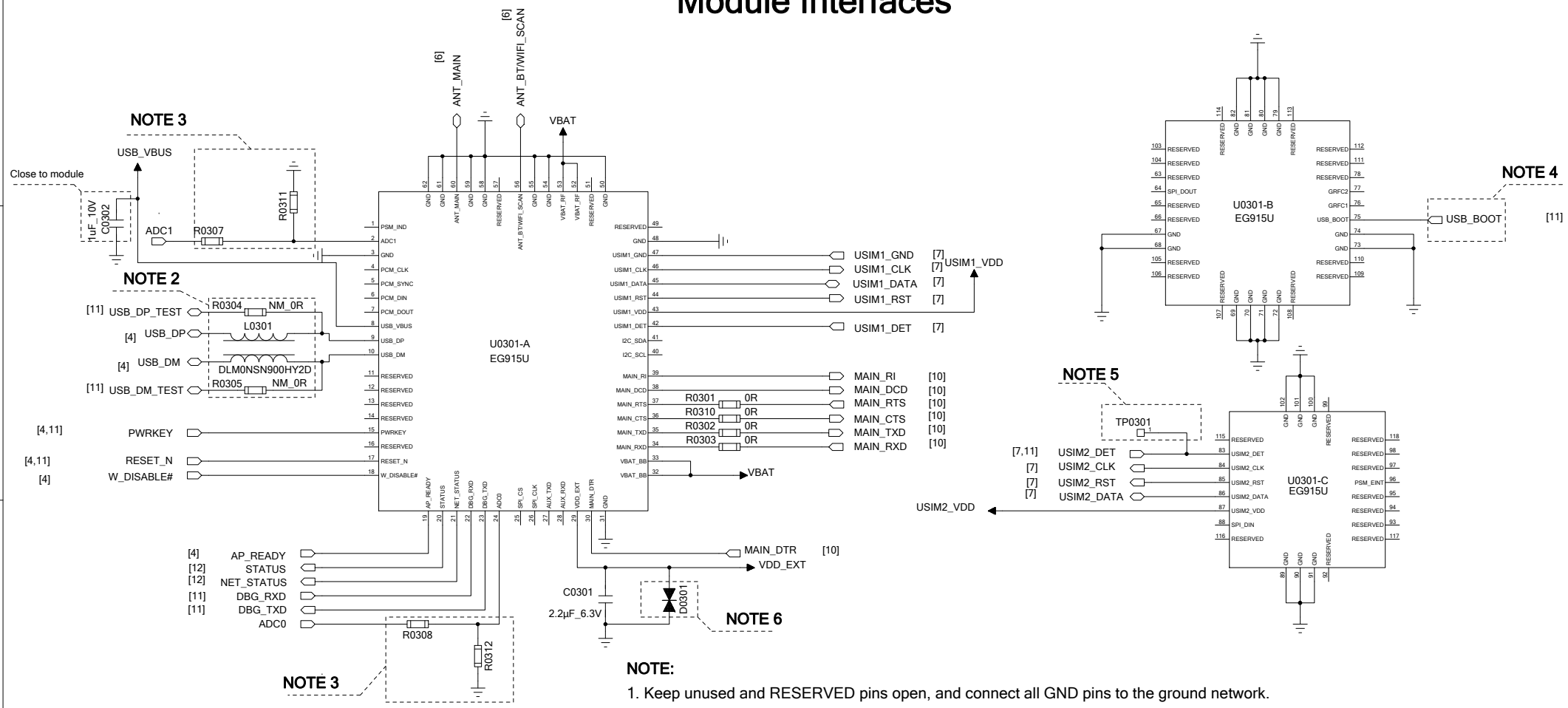

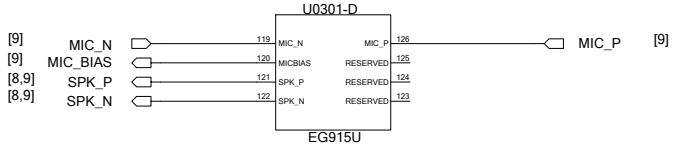

NOTE:

1. Keep unused and RESERVED pins open, and connect all GND pins to the ground network.
2. A common mode choke L0301 is recommended to be added in series between the module and your MCU in order to suppress EMI spurious transmission. Meanwhile, reserve test points for upgrading firmware and debugging software over USB interface and minimize the extra stubs of the trace. L0301 and the two resistors R0304, R0305 should be placed close to the module to ensure the integrity of USB signal.
3. Considering the difference of ADC voltage range among Quectel modules, when it is necessary to use ADC pins, it is strongly recommended to reserve the voltage divider circuit for better compatibility with other Quectel modules. The resistance of the divider must be less than 100 kΩ, otherwise the measurement accuracy of the ADC will be significantly reduced. When the divider circuit is not used, the ADC pins require 1 kΩ resistors in series.
4. When emergency download function is not required, USB_BOOT cannot be pulled up before the module starts up.
5. A test point must be reserved for USIM2_DET pin for debugging.
6. The maximum reverse working voltage of the ESD protection components on VDD_EXT traces should not exceed 5 V.

Quectel Wireless Solutions		
DRAWN BY Phoebe FU	PROJECT EG915U Series	TITLE Reference Design
CHECKED BY Anla HUANG	SIZE A2	VER 1.1
	SHEET 3 OF 12	DATE 2023/4/21

MCU Interfaces

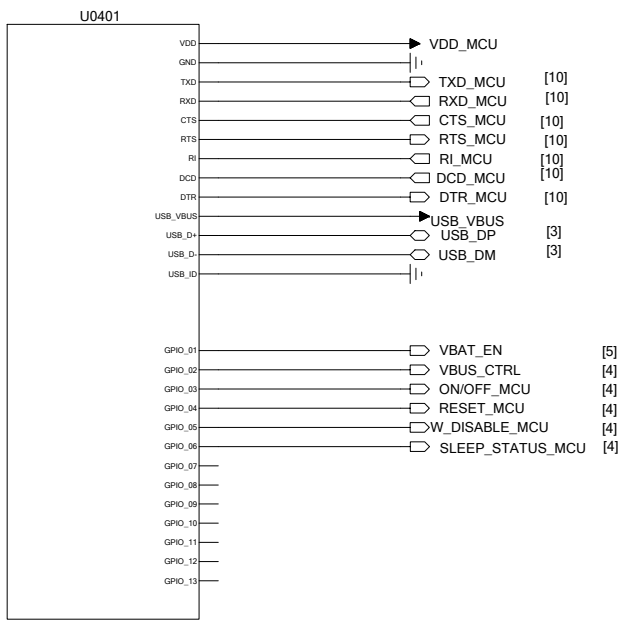

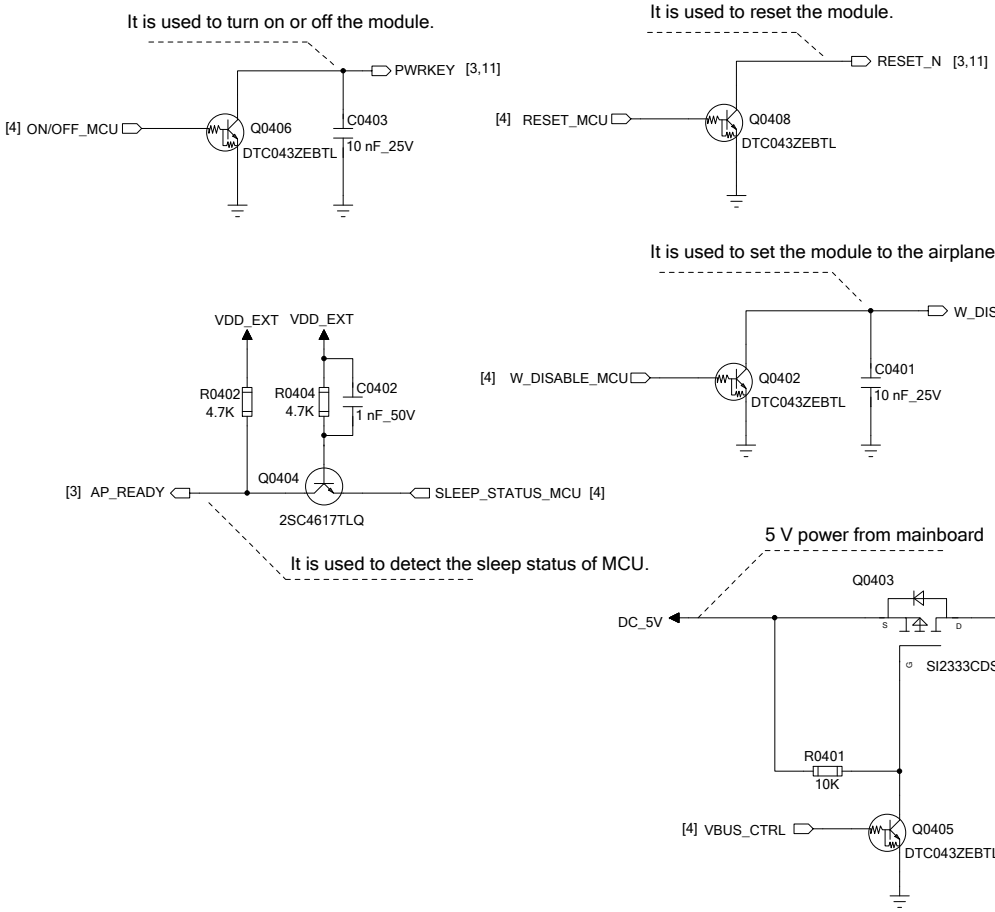

NOTE:

1. U0401 represents your MCU. The power domain of GPIO interfaces of the module is 1.8 V;
   if the GPIO interfaces of U0401 share the same power domain, then the related level-shifting circuit can be omitted.
2. The USB 2.0 interface of the module only serves as a slave device and supports high-speed and full-speed modes.
   To communicate with the USB interface, MCU needs to support USB host mode or OTG function. The USB_VBUS of the module
   and MCU should be powered by an external power system, and USB_VBUS is for USB detection. VBUS_CTRL is used to turn on/off the USB_VBUS power supply.
3. It is recommended to select the default low-level GPIOs of MCU as the control pins for PWRKEY and RESET_N of the module.
   Ensure that the maximum load capacitance of PWRKEY and RESET_N does not exceed 10 nF.

Quectel Wireless Solutions		
DRAWN BY Phoebe FU	PROJECT EG915U Series	TITLE Reference Design
CHECKED BY Anla HUANG	SIZE A2	VER 1.1
	SHEET 4 OF 12	DATE 2023/4/21

Power Supply Design

DC-DC Application

When the input voltage exceeds 7.0 V, use a DC-DC to convert it to an output voltage of 5.0 V, and then use an LDO to convert it to 3.8 V to power the module.

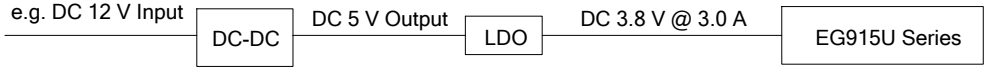

VBAT Design

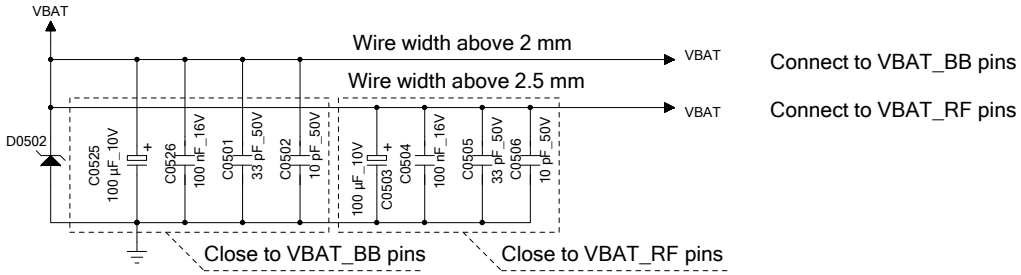

NOTE:

1. For more information about power supply of module, refer to *Quectel_EG915U_Series_Hardware_Design*.
2. The VBAT traces must be connected to pins VBAT_BB and VBAT_RF in a star configuration.
3. The recommended operating voltage of VBAT ranges from 3.3 V to 4.3 V, and the typical value is 3.8 V.

LDO Application

When the input voltage is below 7.0 V, use an LDO to convert the input voltage to 3.8 V.

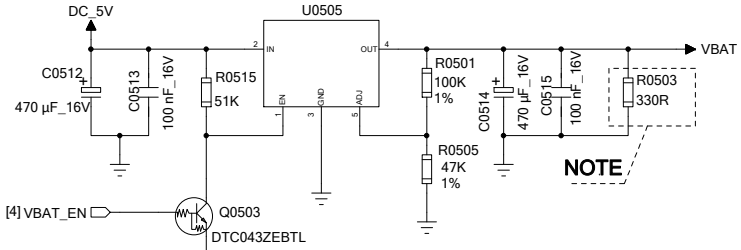

VBAT = (R0501 / R0505 + 1) × 1.24 = 3.88 V

NOTE: The recommended load current is not less than 10 mA.

Quectel Wireless Solutions		
DRAWN BY Phoebe FU	PROJECT EG915U Series	TITLE Reference Design
CHECKED BY Anla HUANG	SIZE A2	VER 1.1
	SHEET 5 OF 12	DATE 2023/4/21

Antenna Interface Design

Wi-Fi Scan/Bluetooth Antenna

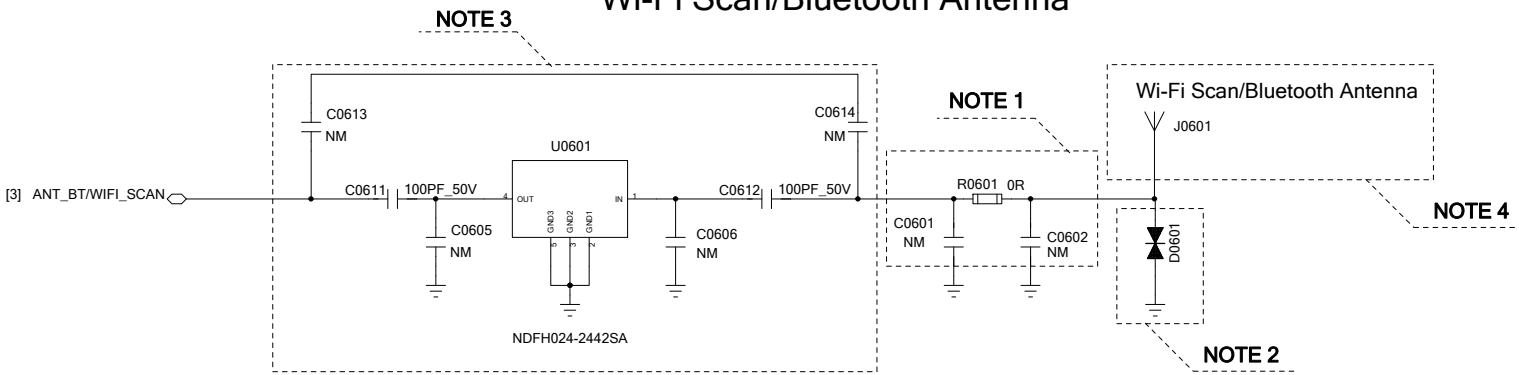

Main Antenna

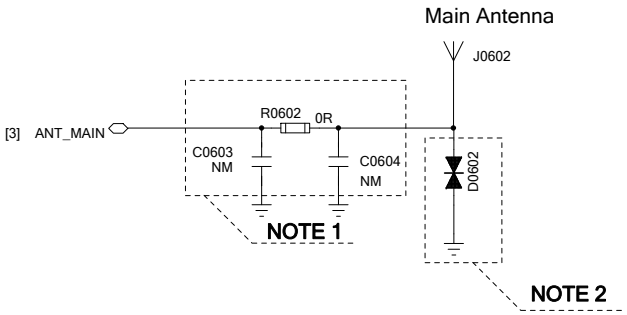

NOTE:

1. It is highly recommended to reserve a Π type matching circuit for future debugging.
2. It is recommended that the junction capacitance and peak reverse working voltage of the ESD protection components do not exceed 0.05 pF and 5 V respectively.
3. For EG915U-CN, you can select C0613 & C0614 in the compatible design, and C0605 & C0606 & C0611 & C0612 & U0601 are not mounted by default.
   For EG915U-EU/-LA, you can select C0605 & C0606 & C0611 & C0612 & U0601 in the compatible design, and C0613 & C0614 are not mounted by default.
4. The module supports Bluetooth and Wi-Fi Scan functions. Due to the shared antenna interface, the two functions cannot be used simultaneously.
   Bluetooth and Wi-Fi Scan functions are optional (both supported or not), and please contact Quectel Technical Support for details.
5. The single-ended impedance of the RF antenna is 50 Ω.

Quectel Wireless Solutions		
DRAWN BY Phoebe FU	PROJECT EG915U Series	TITLE Reference Design
CHECKED BY Anla HUANG	SIZE A2	VER 1.1
	SHEET 6 OF 12	DATE 2023/4/21

(U)SIM Interface Design

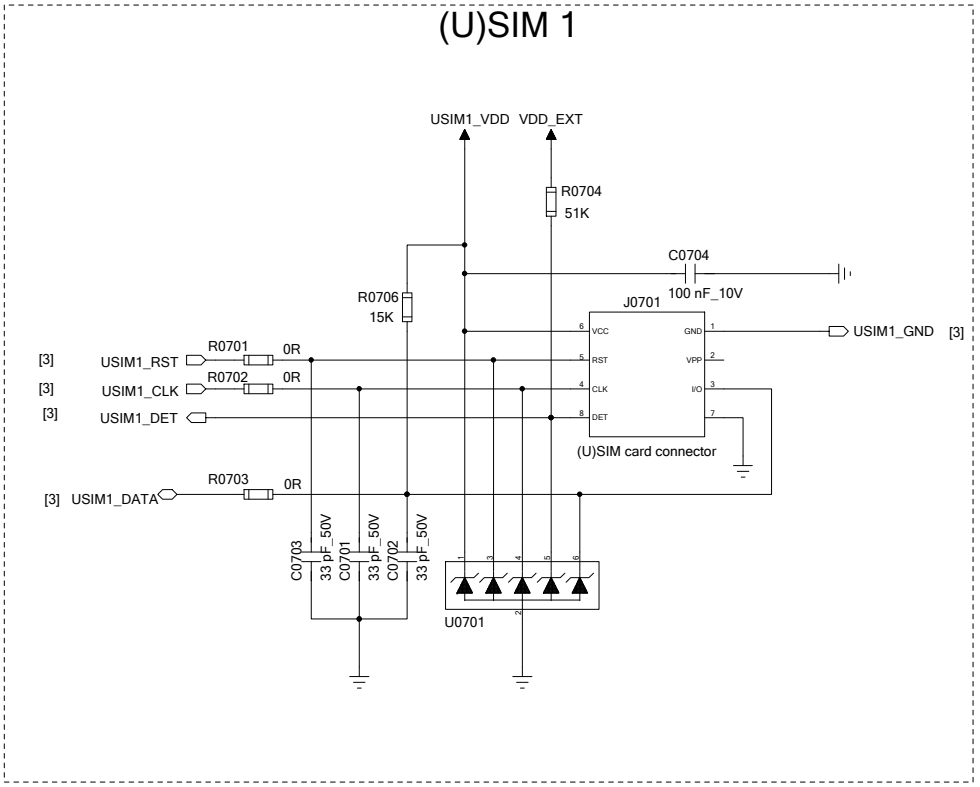

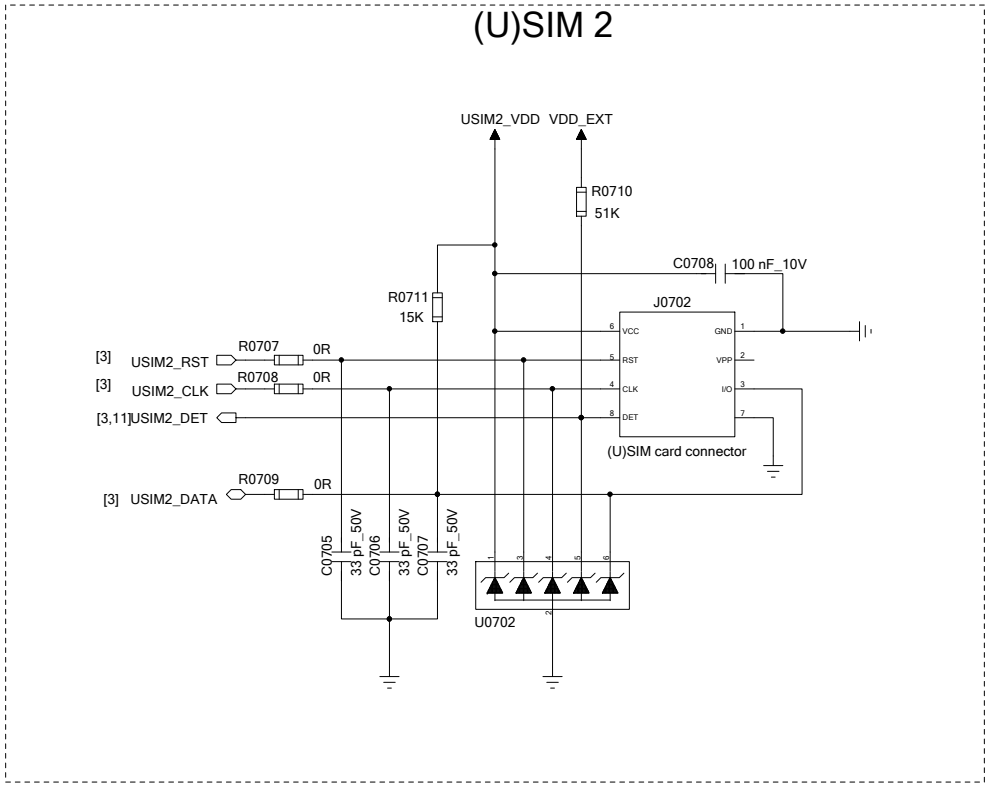

NOTE:

1. U0701 and U0702 are recommended to be used to offer good ESD protection, and the parasitic capacitance should not exceed 15 pF.
2. The pull-up resistors R0706 and R0711 can improve anti-jamming capability, and they should be placed close to the (U)SIM card connector.
3. R0701-R0703 and R0707-R0709 are used for debugging, and C0701-C0703 and C0705-C0707 are used for filtering out RF interference.
4. C0704 and C0708's capacitance should be less than 1 μF and they should be placed close to the (U)SIM card connector.
5. The GND of the (U)SIM card connector is recommended to be connected to the main GND layer directly.
6. The module supports (U)SIM card hot-plug via the USIM_DET pin and both high- and low-level detections are supported. The function is disabled by default.
7. For more information about the layout of (U)SIM interface, please refer to *Quectel_EG915U_Series_Hardware_Design.*

Quectel Wireless Solutions		
DRAWN BY Phoebe FU	PROJECT EG915U Series	TITLE Reference Design
CHECKED BY Anla HUANG	SIZE A2	VER 1.1
	SHEET 7 OF 12	DATE 2023/4/21

Analog Audio Design (Loudspeaker)

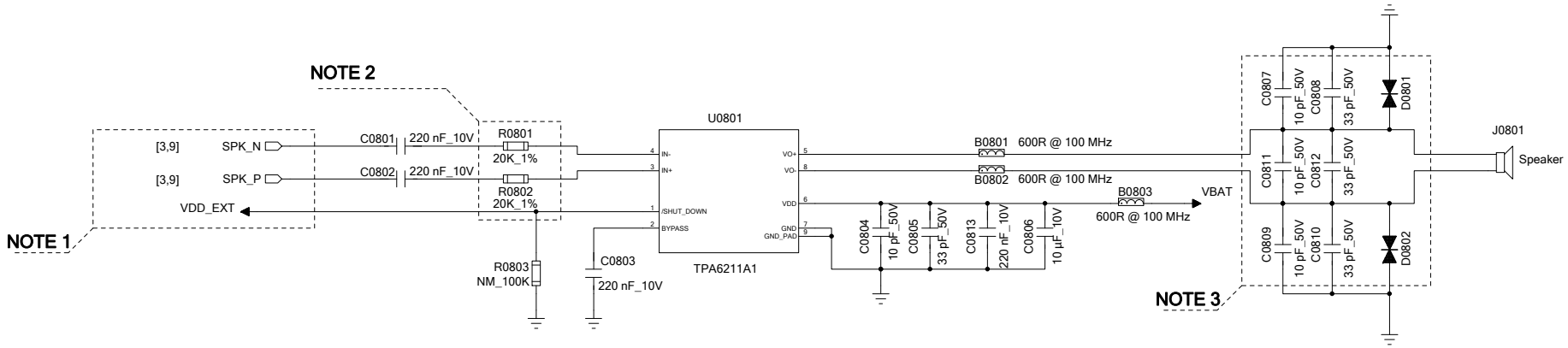

NOTE:

1. SPK_N and SPK_P are differential output channels that can connect an audio PA. When the channels are turned on or off, it is possible for the module to emit a pop sound, which can be eliminated by controlling the enable pin of the audio PA. For details, please contact Quectel Technical Support.
2. Choose the audio power amplifier with appropriate power according to the actual needs. Audio PA Gain = 40 kΩ / R0801 or R0802.
3. Place filter capacitors and ESD protection components close to the loudspeaker and ensure that the output voltage of the audio power amplifier is within the maximum reverse working voltage range of the ESD protection components.

Quectel Wireless Solutions		
DRAWN BY Phoebe FU	PROJECT EG915U Series	TITLE Reference Design
CHECKED BY Anla HUANG	SIZE A2	VER 1.1
	SHEET 8 OF 12	DATE 2023/4/21

Analog Audio Design (Handset)

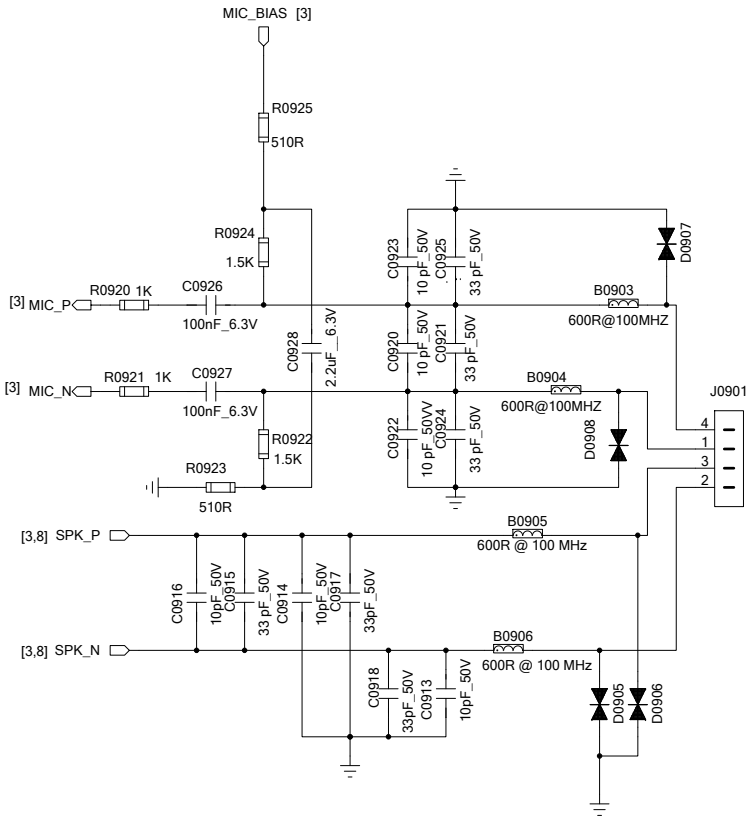

NOTE:

1. Both the MIC and SPK signal traces need to be routed as differential pairs.
2. All MIC and SPK signal traces should be surrounded with ground on the layer and with ground planes above and below, and far away from noise sources.
3. ESD protection components should be placed as close to the audio interfaces as possible
   and ensure that the audio voltage is within the maximum reverse working voltage range of the ESD protection components.

Quectel Wireless Solutions		
DRAWN BY Phoebe FU	PROJECT EG915U Series	TITLE Reference Design
CHECKED BY Anla HUANG	SIZE A2	VER 1.1
	SHEET 9 OF 12	DATE 2023/4/21

UART Interface Design

UART Level-shifting Circuit - Transistor Solution

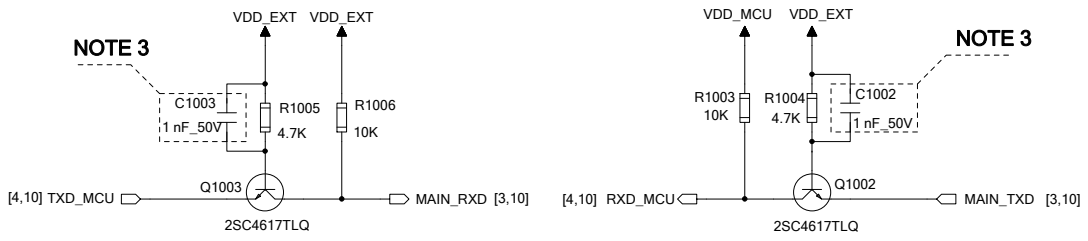

UART Level-shifting Circuit - IC Solution

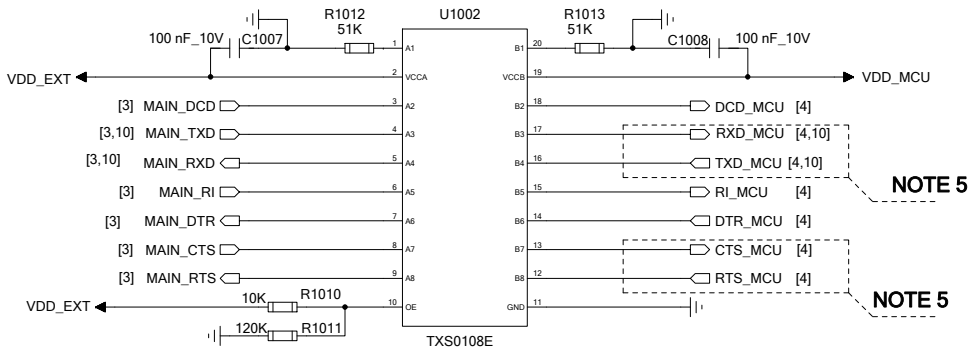

NOTE:

1. There are two level-shifting solutions: transistor solution and IC solution, of which the latter is recommended.
2. The power supply of TXS0108E's VCCA should not exceed that of VCCB. For more information, please refer to the datasheet of TXS0108E.
3. The transistor solution is not suitable for applications with high baud rates exceeding 460 kbps. The capacitors C1002 and C1003 of 1 nF can improve the signal quality.
4. The MAIN_RTS and MAIN_DTR transistor circuits are similar to that of the MAIN_RXD.
   The MAIN_CTS, MAIN_RI and MAIN_DCD transistor circuits are similar to that of the MAIN_TXD.
5. The hardware flow control pins MAIN_CTS and MAIN_RTS adopt the direct connection mode, that is,
   the module CTS is connected to the MCU CTS, and the module RTS is connected to the MCU RTS. In addition, pay attention to the direction of connection.
   MAIN_TXD and MAIN_RXD adopt a cross connection mode, that is, the TXD and RXD of the module are respectively connected to the RXD and TXD of the MCU.

Quectel Wireless Solutions		
DRAWN BY Phoebe FU	PROJECT EG915U Series	TITLE Reference Design
CHECKED BY Anla HUANG	SIZE A2	VER 1.1
	SHEET 10 OF 12	DATE 2023/4/21

Reserved Test Points

USB Interface Test Points

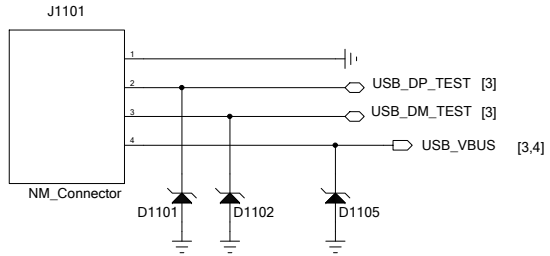

NOTE:

1. Test points must be reserved for USB interface for debugging.
2. The module can upgrade the firmware over USB interface.
3. The parasitic capacitance of the ESD protection components on USB data traces should not exceed 2 pF. Ensure that the signal voltage is within the maximum reverse working voltage range of the ESD protection components.

USB_BOOT Interface Test Points

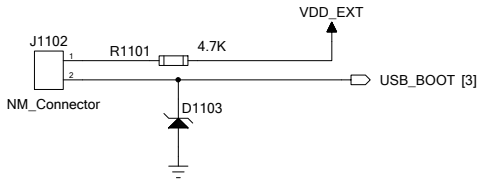

NOTE:

1. It is recommended to reserve a test point for USB_BOOT interface.
2. Pull up the USB_BOOT to VDD_EXT before the module starts up, and the module will enter emergency download mode after powering up. In this mode, the module supports firmware upgrade over USB interface.

Debug UART Test Points

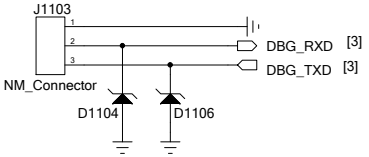

NOTE:

1. Test points must be reserved for DBG_TXD and DBG_RXD for debugging.
2. The debug UART interface supports 1.8 V power domain, and if the power domain of your application is 3.3 V, you need to use a level-shifting circuit. For details, refer to "UART Interface Design" sheet.
3. The debug UART only supports the baud rate of 921600 bps.

USIM2_DET Test Point

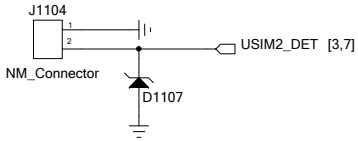

NOTE:

1. A test point must be reserved for USIM2_DET for debugging.
2. USIM2_DET supports 1.8 V power domain.

PWRKEY Test Point

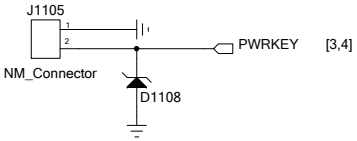

NOTE:

It is recommended to reserve a test point for PWRKEY.

RESET_N Test Point

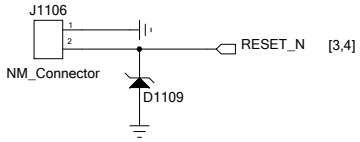

NOTE:

It is recommended to reserve a test point for RESET_N.

Quectel Wireless Solutions		
DRAWN BY Phoebe FU	PROJECT EG915U Series	TITLE Reference Design
CHECKED BY Anla HUANG	SIZE A2	VER 1.1
	SHEET 11 OF 12	DATE 2023/4/21

Indicator Design

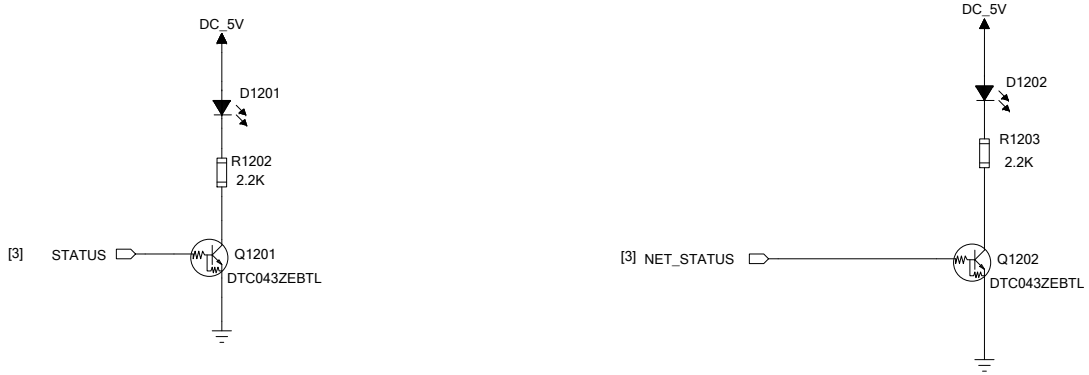

NOTE:

1. For more details about STATUS and NET_STATUS, refer to *Quectel_EG915U_Series_Hardware Design.*
2. If the low power consumption is required when your device is in sleep status, replace the power supply DC_5V of the STATUS and NET_STATUS indicators with the external controllable ones, which can be turned off when the module is in sleep mode to reduce the power consumption.

Quectel Wireless Solutions		
DRAWN BY Phoebe FU	PROJECT EG915U Series	TITLE Reference Design
CHECKED BY Anla HUANG	SIZE A2	VER 1.1
	SHEET 12 OF 12	DATE 2023/4/21